INSTALLATION AND PROGRAMMING GUIDE

XTLplus SERIES PANELS

MODEL XTLplus SERIES
INSTALLATION AND PROGRAMMING GUIDE

FCC NOTICE

This equipment has been tested and found to comply with the limits for a Class B digital device, pursuant to Part 15 of the FCC Rules. These limits are designed to provide reasonable protection against harmful interference in a residential installation. This equipment generates, uses and can radiate radio frequency energy and, if not installed and used in accordance with the instructions, may cause harmful interference to radio communications. However, there is no guarantee that interference will not occur in a particular installation. If this equipment does cause harmful interference to radio or television reception, which can be determined by turning the equipment off and on, the user is encouraged to try to correct the interference by one or more of the following measures:

- Reorient or relocate the receiving antenna.
- Increase the separation between the equipment and receiver.
- Connect the equipment into an outlet on a circuit different from that to which the receiver is connected.
- Consult the dealer or an experienced radio/TV technician for help.

Changes or modifications not expressly approved by the party responsible for compliance could void the user's authority to operate the equipment.

This device has been designed to operate with the integrated 1100 Series PCB antenna having a maximum gain of 1.0 dB. Antennas having a gain greater than 1.0 dB are strictly prohibited for use with this device. The required antenna impedance is 50 ohms.

If necessary, the installer should consult the dealer or an experienced radio/television technician for additional suggestions. The installer may find the following booklet, prepared by the Federal Communications Commission, helpful:

"How to identify and Resolve Radio-TV Interference Problems."

This booklet is available from the U.S. Government Printing Office, Washington D.C. 20402
Stock No. 004-000-00345-4

© 2017 Digital Monitoring Products, Inc.
Information furnished by DMP is believed to be accurate and reliable.
This information is subject to change without notice.

Panel Specifications
1.1 Power Supply 1
1.2 Communication 1
1.3 Keypads 1
1.4 Number of Zones 1
1.5 Enclosure Specifications 1
Introduction
2.1 System Configurations 1
2.2 Caution Notes 1
2.3 Compliance Instructions 1
System Components
3.1 Accessory Devices 2
Installation
4.1 Mounting Location Information 3
4.2 Mounting the Enclosure 3
Primary Power Supply
5.1 DC Input 3
Secondary Power Supply
6.1 Standby Battery 4
6.2 Replacement 4
6.3 Battery Supervision 4
LED Operation
7.1 Backlit Logo 5
RESET Button
8.1 Description 5
TAMPER Button
9.1 Description 5
PROG Programming Connection
10.1 Description 5
On-Board 1100 Series Wireless
11.1 Wireless Antenna 5
11.2 Wireless LED Operation 5
Wireless Zones
12.1 Description 6
Wireless Key Fobs and Outputs
13.1 Description 6
Flash LOAD Button
14.1 Description 6
On-Board Z-Wave Connection
15.1 Description 6
On-Board Wi-Fi Network
16.1 Description 6
16.2 Wi-Fi LEDs 6
Cellular Connection
17.1 Description 7
Wireless Keypads
18.1 Mounting Wireless Keypads 7
Programming Introduction
19.1 Before You Begin 8
19.2 Getting Started 8
19.3 Keypad 10
19.4 Special Keys 10
19.5 Entering Alpha Characters 11
19.6 Entering Non-Alpha Characters 11
19.7 Keypad Displays Current Programming 11

19.8 Programming Menu 12
19.9 Programmer Lockout Codes....12
19.10 Reset Timeout....12

Initialization

20.1 Initialization 13
20.2 Clear All Codes 13
20.3 Clear All Schedules 13
20.4 Clear Events....13
20.5 Clear Zone Programming....13
20.6 Clear Communication....13
20.7 Clear Wi-Fi 13
20.8 Set to Factory Defaults....13

Fast Programming

21.1 Fast Program....14
21.2 Account Number....14
21.3 First IP Address 14
21.4 App Key 14
21.5 System 14
21.6 Hours from GMT....14
21.7 Weather Zip Code....14
21.8 Enter Siren Serial Number 14
21.9 Zone Number 14
21.10 Zone Name 14
21.11 Zone Type....14
21.12 Area Assignment 14
21.13 Serial Number Entry 14
21.14 Stop 14

Communication

22.1 Communication 15
22.2 Account Number....15
22.3 Transmission Delay 15
22.4 Communication Type 15
22.5 Backup Cellular 15
22.6 Test Time....15
22.7 Test Days....15
22.8 Check-In Minutes....15
22.9 Fail Time....15
22.10 Send Communication Trouble 16
22.11 First Cell APN 16
22.12 Second Cell APN....16
22.13 Receiver 1 Programming 16
22.14 Alarm Reports 16
22.15 Supervisory/Trouble Reports....16
22.16 Opening/Closing and User Reports....16
22.17 Test Report 16
22.18 First IP Address....16
22.19 First IP Port....16
22.20 Second IP Address....16
22.21 Second IP Port 16
22.22 Receiver 2 Programming 17
22.23 Alarm Reports 17
22.24 Supervisory/Trouble Reports....17
22.25 Opening/Closing and User Reports....17
22.26 Test Report 17
22.27 First IP Address....17
22.28 First IP Port....17
22.29 Second IP Address....17
22.30 Second IP Port 17

Network Options

23.1 Network Options 17
23.2 Wi-Fi Setup 17
23.2.1 WPS 18
23.2.2 List 18
23.2.3 Manual 18
23.2.4 Test 19
23.3 Wireless Security Type 19
23.4 Wireless Network Key 19
23.5 DHCP 19
23.6 Local IP Address 19
23.7 Gateway Address 19
23.8 Subnet Mask 19
23.9 DNS Server 19
23.10 Programming Port 19

Messaging Setup

24.1 Messaging Setup 19
24.2 Enable Messaging 20
24.3 System Name 20
24.4 Destination 1 20
24.5 Destination 1 User Number 20
24.6 Destination 2 20
24.7 Destination 2 User Number 20
24.8 Destination 3 20
24.9 Destination 3 User Number 20
24.10 O/C SMS 20
24.11 Monthly Limit 20

Device Setup

25.1 Device Setup 20
25.2 Device Number 20
25.3 Device Name 21
25.4 Wireless 21
25.5 Serial Number 21
25.6 Supervision Time 21

Remote Options

26.1 Remote Options 21
26.2 Remote Key 21
26.3 Remote Disarm 21
26.4 App Key 21

System Reports

27.1 System Reports 22
27.2 Opening/Closing Reports 22
27.3 Abort Reports 22
27.4 Zone Restoral Reports 22
27.5 Bypass Reports 22
27.6 Code Change Reports 22
27.7 Ambush 22
27.8 Late To Open 22
27.9 Early To Close 22

System Options

28.1 System Options 23
28.2 System 23
28.3 Closing Code 23
28.4 Closing Check 23
28.5 Entry Delay 1 23
28.6 Exit Delay 23
28.7 Cross Zone Time 23
28.8 Power Fail Delay 24

28.9 Swinger Bypass Trips 24
28.10 Reset Swinger Bypass 24
28.11 Zone Activity Hours 24
28.12 Arm Activity Days 24
28.13 Time Zone Changes 24
28.14 Time Display 25
28.15 House Code 25
28.15.1 Detect Wireless Jamming 25
28.15.2 Wireless Audible Annunciation 25
28.16 Enable Keypad Panic Keys 25
28.17 Occupied Premises 25
28.18 Use False Alarm Question 25
28.19 Weather Zip Code 25

Bell Options

29.1 Bell Options 26
29.2 Bell Cutoff Time 26
29.3 Automatic Bell Test 26
29.4 Bell Output 26
29.5 Bell Action 26
29.5.1 Fire 26
29.5.2 Burglary 26
29.5.3 Supervisory 26
29.5.4 Panic 26
29.5.5 Emergency 26
29.5.6 Auxiliary 1 26
29.5.7 Auxiliary 2 26

Output Options

30.1 Output Options 27
30.2 Communication Failure Output 27
30.3 Fire Alarm Output 27
30.4 Fire Trouble Output 27
30.5 Ambush Output 27
30.6 Begin Exit Output 27
30.7 End Exit Output 27
30.8 Ready Output 27
30.9 Armed Output 27
30.10 Disarmed Output 27
30.11 Burglary Output 27
30.12 Arm-Alarm Output 27
30.13 Heat Saver Temperature 28
30.14 Cool Saver Temperature 28

Output Setup

31.1 Output Setup 28
31.2 Output Number 28
31.3 Output Name 28
31.4 Serial Number 28
31.5 Supervision Time 28
31.6 Trip with Panel Bell Option 29

Area Information

32.1 Area Information 29
32.2 Area Number 29
32.3 Area Name 29
32.4 Automatic Arming 29
32.4.1 Bad Zones 29
32.5 Automatic Disarming 29

Zone Information

33.1 Zone Information 30
33.2 Zone Number 30

33.3 Key Fob 31
33.4 Zone Name 31
33.5 Zone Type 31
33.6 Arming Zone Assignment 31
33.7 Area Assignment 32
33.7.1 Style 32
33.8 DMP Wireless 32
33.8.1 Serial Number Entry 32
33.8.2 Contact 32
33.8.3 Supervision Time 33
33.8.4 LED Operation 33
33.8.5 Disarm/Disable 33
33.8.6 Wireless PIR Pulse Count 33
33.8.7 Wireless PIR Sensitivity 33
33.8.8 Next Zone 33
33.9 1144 Series Key Fobs 33
33.9.1 Key Fob User Number 34
33.9.2 Key Fob Serial Number 34
33.9.3 Key Fob Supervision Time 34
33.9.4 Number of Key Fob Buttons 34
33.9.5 Key Fob Button Selection (Four Buttons) 34
33.9.6 Key Fob Button Selection (Two Buttons) 34
33.9.7 Button Action 34
33.9.8 Button Press Time 35
33.9.9 Arm/Disarm Area Selection 35
33.9.10 Output Number 35
33.9.11 Output Action 35
33.10 Alarm Action 35
33.11 Disarmed Open 36
33.11.1 Message To Transmit 36
33.11.2 Output Number 36
33.11.3 Output Action 36
33.12 Swinger Bypass 36
33.13 Prewarn Address 37
33.14 Entry Delay 37
33.15 Cross Zone 37
33.16 Priority 37
33.17 Traffic Count 37
33.18 Zone Audit Days 37
33.19 Receiver Routing 37
33.20 Zone Number 38

Stop

34.1 Stop 38

Set Lockout Code

35.1 Set Lockout Code 38

Appendix

36.1 Status List 39
36.2 Transmission Delay 39
36.3 False Alarm Reduction 39
36.4 Diagnostics Function 39
36.5 Using the Walk Test 41
Walk Test 41
Trip Counter For DMP Wireless Check-in Test (WLS) 41
Test End Warning 42
Failed Zones Display 42
36.6 Keypad Speaker Operation 42
36.7 Cross Zoning 42
36.8 Zone Type Descriptions 43

36.9 Zone Type Defaults 44
36.10 Common Keypad Messages 45

Listed Compliance Specifications

37.1 Introduction 45
37.2 Use Marking 45
37.2 Locations and Wiring 45
37.3 NFPA 72 45
37.4 Types Of Service 45
37.5 Police Station Phone Numbers 45
37.6 Bypass Reports 45
37.7 System Testing 45
37.8 FCC Notice 46

Household Burglar-Alarm System Units ANSI/UL 1023

38.1 Bell Cutoff 46
38.2 Entry Delay 46
38.3 Exit Delay 46
38.4 Wireless External Contact 46
38.5 Wireless Supervision Time 46
38.6 Wireless Audible Annunciation 46
38.7 Panel location 46
38.8 Test Frequency 46

Central Station Burglar Alarm Units ANSI/UL 1610

39.1 Supervision 46
39.2 Remote Disarm 46
39.3 Central Station 46
40.1 Bell Output Definition 46
40.2 Household System 46
40.3 Wireless Supervision Time 46
40.4 Wireless Fire Verification 46
40.5 Battery Standby 46
40.6 Test Frequency 46

False Alarm Reduction Programmable Options ANSI/SIA CP-01-2010

41.1 Shipping Defaults and Recommended Programming 47

Z-Wave Certification Information

Removing or Replacing Failed Devices 48
Z-Wave Terminology 48
Z-Wave Certification 48

Revisions to This Document

Certifications

Ordering Information

Accessories

Panel Specifications

1.1 Power Supply

Model 372-500-W plug-in DC power supply

Input:	120VAC, 60 Hz
Output:	12VDC
Standby Battery:	DMP 3.8VDC Lithium, 800mAh
Optional Standby Battery	DMP 3.8VDC Lithium, 3500mAh

All circuits inherent power limited

1.2 Communication

Optional CDMA cellular module to send messages to DMP Model SCS-1R or SCS-VR Central Station Receivers.

Built-in Wi-Fi™ network alarm signal communication to DMP Model SCS-1R or SCS-VR Central Station Receivers.

1.3 Keypads

You can associate up to 4 alphanumeric 9000 Series or 9862 Graphic Touchscreen Wireless Keypads.

1.4 Number of Zones

- XTLplus has 48 wireless initiating zones numbered 1-48
- Zone and Output numbers 51 to 54 and 61 to 64 can support 1144 Series Key Fobs, Output Modules, or sirens

1.5 Enclosure Specifications

Size	Color
5.5” W x 3.75” H x 1” D	White (W)

Introduction

2.1 System Configurations

The panel can be programmed to operate as any of the following system types:

- All/Perimeter system that provides one perimeter area and one interior area
- Home/Sleep/Away system that provides one perimeter, one interior, and one bedroom area. The bedroom area provides for any protection devices the user wants disarmed during their sleeping hours and armed in the Away mode.
- Six area system that provides areas of protection that can be independently armed or disarmed.

2.2 Caution Notes

Throughout this guide you will see caution notes containing information you need to know when installing the panel. These cautions are indicated with a yield sign. Whenever you see a caution note, make sure you completely read and understand its information. Failing to follow the caution note can cause damage to the equipment or improper operation of one or more components in the system.

2.3 Compliance Instructions

For applications that must conform to a local authorities installation standard or a National Recognized Testing Laboratory certificated system, please see the Listed Compliance Specifications section near the end of this guide for additional instructions.

System Components

3.1 Accessory Devices

Cellular Communicator Cards	
265C CDMA Cellular Communicator	Allows you to connect the XTLplus to any compatible CDMA/SMS network.
DMP Two-Way Wireless Devices	
1100R Repeater	Provides additional range for wireless devices.
1101 Universal Transmitter	Provides both internal and external contacts that may be used at the same time to yield two individual reporting zones from one wireless transmitter. Provides Disarm/Disable functionality.
1102 Universal Transmitter	Provides one external contact. Provides Disarm/Disable functionality.
1103 Universal Transmitter	Provides both internal and external contacts that may be used at the same time to yield two individual reporting zones from one wireless transmitter. Requires EOL resistor for external contact. Provides Disarm/Disable functionality.
1106 Universal Transmitter	Provides both internal and external contacts that may be used at the same time to yield two individual reporting zones from one wireless transmitter. Provides Disarm/Disable functionality.
1107 Micro Window Transmitter*	Provides survey capability for window applications.
1114 Four-Zone Expander*	Provides four wireless zones with EOL resisters.
1115 Wireless Termperature Sensor and Flood Detector	Temperature and flood detector wth an internal temperature sensor. Can be paired with 470PB or T280R remote sensors.
1116 Relay Output*	Provides one Form C relay.
1117 LED Annunciator*	Provides a visual system status indicator.
1119 Door Sounder*	Provides a wireless sounder with integrated door contact.
1121 PIR Motion Detector*	Provides motion detection with pet immunity.
1126R Motion Detector*	Ceiling mount motion detector with panel programmable sensitivity and Disarm/Disable functionality.
1127C/1127W PIR Motion Detector	Wall mount motion detector with panel programmable sensitivity and Disarm/Disable functionality.
1129 Glassbreak Detector*	Detects the shattering of framed glass mounted in an outside wall and provides full-pattern coverage and false-alarm immunity.
1131 Recessed Contact*	Provides concealed protection for doors, windows or other applications.
1135 Siren*	Provides a wireless siren.
1137 Wireless LED Emergency Light*	Provides emergency indoor path lighting.
1139 Bill Trap*	Provides a silent alarm option for use in cash drawers.
1141 Wall Button*	One-button wireless transmitter designed to be wall-mounted.
1142BC Two-button Panic Belt Clip Transmitter	Provides portable two-button panic operation.
1142 Two-button Panic Transmitter	Provides permanently mounted under-the-counter two-button panic operation.
1144-4 (Four-Button)* 1144-2 (Two-Button)* 1144-1 (One-Button)* 1144-D (Two-Button)*	Key Fob transmitters designed to clip onto a key ring or lanyard.
1148 Personal Pendant	Wireless emergency transmitter to be worn as a wristband or on a break-away lanyard.
1154 4-Zone Takeover Module	Converts up to four existing normally closed, hardwired zones into wireless zones.
1164/1164NS Wireless Commercial Smoke	Battery powered, wireless, low profile, photoelectric smoke detector. The 1164 also offers a synchronized sounder.
1183-135F Heat Detector	Fixed temperature heat detector.
1183-135R Heat Detector	Fixed temperature and rate-of-rise heat detector.
1184 Carbon Monoxide Detector	Carbon Monoxide detector.
Keypads	
9000 Series LCD Keypads	Allows you to control the panel from various remote locations.
9862 Wireless Graphic Touchscreen Keypad	Allows you to control the panel from various remote locations.
* These devices have not been investigated and shall not be used in listed installations.	

Installation

4.1 Mounting Location Information

A location should be selected that is centrally located between the 1100 Series transmitters used in the installation. Install the XTLplus away from metal objects. Mounting the panel on or near metal surfaces impairs performance. When selecting the proper mounting location of a transmitter, refer to the LED Survey Operation section of the specific installation guide for the transmitter being installed.

4.2 Mounting the Enclosure

The enclosure for the panel must be mounted using the provided #6 screws in the four mounting holes shown in Figure 1. Mount the enclosure in a secure, dry place away from metal objects to protect the panel from damage due to tampering or the elements. Mount the panel a minimum of 4 feet from any wireless transmitters or repeaters. It is not necessary to remove the PCB when installing the enclosure.

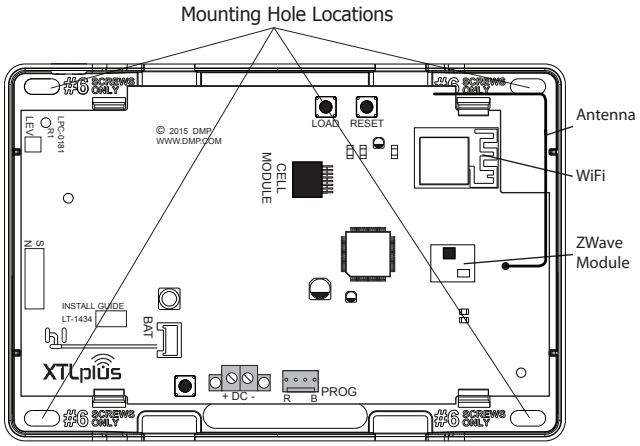

Figure 1: Mounting Hole Locations

Primary Power Supply

5.1 DC Input

Mount the panel near a wall outlet for the Model 372-500-W plug-in DC power supply. In addition to powering the panel, the DC plug-in power supply also charges the back-up battery. The 372-500-W must be located within 100 feet of the panel using 22 AWG wire. Use the following steps to connect the plug-in power supply:

OBSERVE POLARITY

1. Using 22 AWG wire, connect the panel DC terminal (+) to the positive terminal on the power supply.
2. Connect the panel DC terminal (-) to the negative terminal on the power supply. See Figure 2.
3. Plug the power supply into a 120 Volt AC, 60Hz dedicated outlet not controlled by a switch.

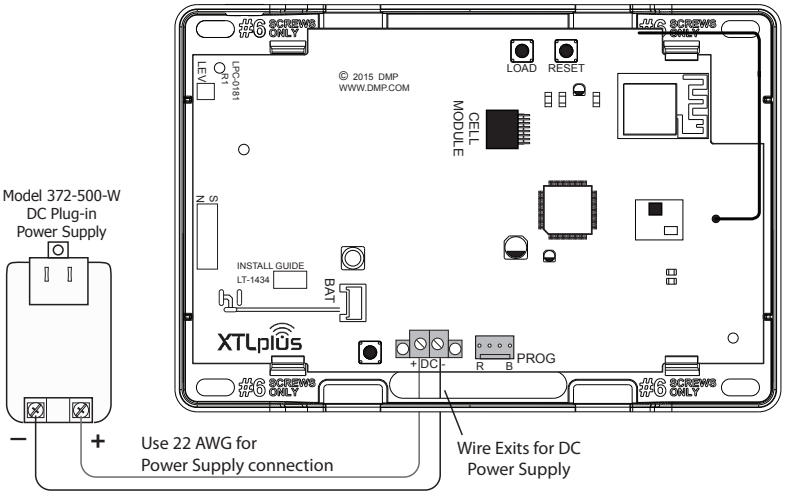

Figure 2: DC Power Supply Connection

Secondary Power Supply

6.1 Standby Battery

The XTLplus 800mAh rechargeable battery is used to provide 4 hours of standby battery power when DC power is not available. The battery is intended for backup power only and not to operate the panel on a daily basis. If the battery is low, or not plugged into the BAT battery connector, a low battery condition is indicated by the panel. If 24 hour standby battery power is needed, connect the 3500mAh battery. See Figure 3.

Note: If removing the panel from service, disconnect the backup battery from the BAT connector.

6.2 Replacement

Use the following steps to replace the XTLplus standby battery. DMP recommends replacing the battery every 3 years under normal use.

1. Unplug the BAT battery connector from the XTLplus panel.
2. Loosen the top PCB snaps.
3. Lean the panel PCB forward and lift out from the bottom PCB snaps.
4. Remove and properly dispose of the used battery.

Caution: Risk of fire, explosion, and burns. Do not disassemble, heat above 212˚F (100˚C), or incinerate. Properly dispose of used batteries.

5. Place the new battery into the XTLplus housing base with the battery wires directed toward the bottom left corner. See Figure 3.
6. Set the XTLplus PCB into the bottom snaps and press into the top snaps to secure in place.
7. Plug the battery into the BAT panel connector.

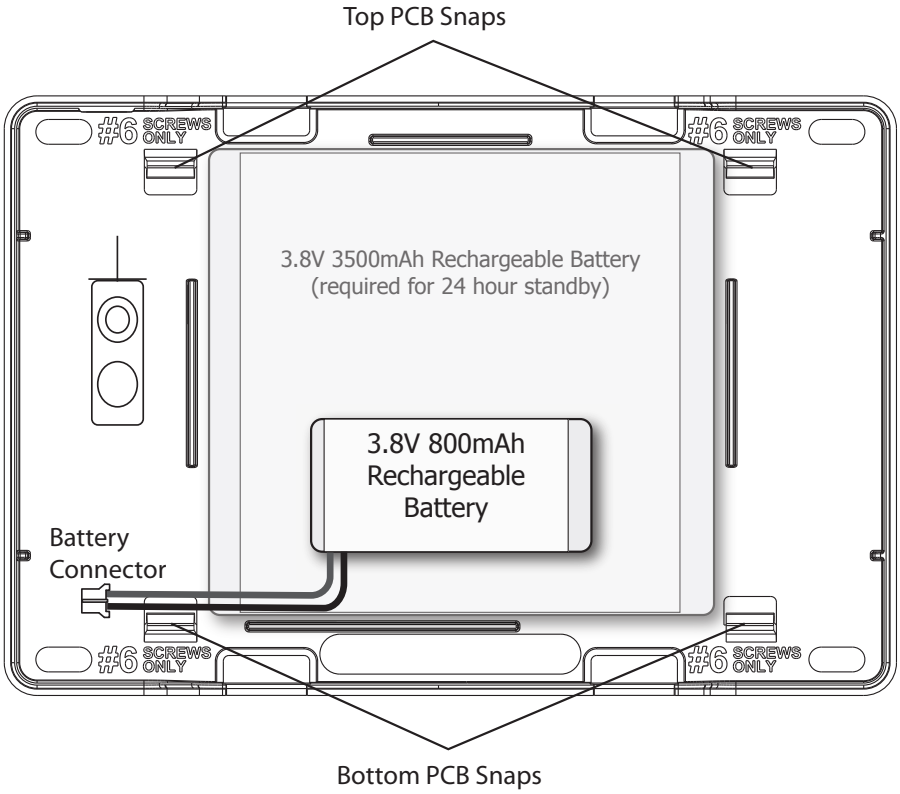

Figure 3: Standby Battery Replacement

6.3 Battery Supervision

The panel tests the battery once every hour when DC power is present. This test occurs 15 minutes past each hour and lasts for five seconds. A load is placed on the battery and if the battery voltage is low, a low battery is detected. If DC power has failed, a low battery is detected any time the battery voltage falls below 3.7V.

LED Operation

7.1 Backlit Logo

The backlit logo indicates the Power and Armed status of the panel. Depending on the operation, the LED displays in Red or Green as listed in the table.

Color and Activity	Operation
Green Steady	Panel Disarmed, Primary Power OK, Battery OK
Green Blinking	Panel Disarmed, Primary Power OK, Battery Fault
No Light	Panel Disarmed, Primary Power Fault, Battery OK
Red Steady	Panel Armed, Primary Power OK, Battery OK
Red/Green Alternate	Panel Armed, Primary Power OK, Battery Fault
Red Blinking	Panel Armed, Primary Power Fault, Battery OK

RESET Button

8.1 Description

The RESET button is located on the top of the circuit board and is used to reset the XTLplus microprocessor. To reset the panel prior to reprogramming, press the RESET button without powering down the system. After resetting the panel, begin programming within 30 minutes. If you wait longer than 30 minutes, you must reset the panel again. See Figure 4 for RESET button location.

TAMPER Button

9.1 Description

The tamper button is pressed when the cover of the XTLplus is secured onto the enclosure. When the cover is removed, the XTLplus sends a Tamper Trouble message to the Central Station.

PROG Programming Connection

10.1 Description

Onsite programming can be completed using an associated wireless keypad or by connecting a hardwired keypad to the PROG header.

On-Board 1100 Series Wireless

11.1 Wireless Antenna

The XTLplus Wireless Antenna is integrated into the circuit board. The panel's built-in wireless receiver operates with DMP 1100 Series transmitters. See section 3.1 for a list of accessory devices.

11.2 Wireless LED Operation

The wireless LEDs are located in the upper right of the circuit board below the RESET button and
function as follows:

Green: The green LED flashes every time the receiver transmits (32 times per second). If the panel is reset, or the panel is powered off, the green LED is off. Under normal operation, the green LED flashes constantly with no interruption or change.

Yellow: The yellow LED flashes every time the panel receives a message from a programmed wireless transmitter. When a message is sent by a transmitter, typically by pressing or releasing the TAMPER button, the yellow LED should flash indicating that the panel received a message from the transmitter.

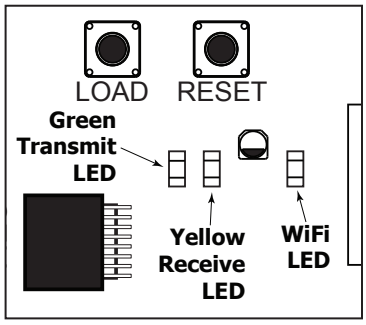

Figure 4: XTLplus Wireless LED's

If the LED never flashes, the transmitter is not getting through to the panel. This could be because of a misprogrammed serial number or the transmitter is too far away. Under normal operation, the yellow LED flashes at every trip of every wireless transmitter and when the transmitters perform their periodic check-in. It is not unusual for this LED to stay off for many minutes at a time when no transmitters are communicating. See Figure 4 for Wireless LED locations.

Wireless Zones

12.1 Description

XTLplus panels provide 48 wireless zones numbered 1 to 48. A default zone name, zone type, and area assignment are described and can be changed in Zone Information programming as needed. The defaults are provided as a programming convenience to help reduce installation time.

Wireless Key Fobs and Outputs

13.1 Description

XTLplus panels provide 8 wireless key fob or output addresses numbered 51 to 54 and 61 to 64. A default name is provided as a programming convenience to help reduce installation time. The default names are described in the programming sections of this guide and can be changed in Output Information or Zone Information programming as needed

Flash LOAD Button

14.1 Description

The XTLplus panel software can be updated via the panel's PROG programming header. To update the panel with a new software version, complete the following steps at the protected premises:

Model 399 Cable

Connect a DMP 399 Cable from the PROG header to the serial port of your PC operating Remote Link and containing the XTLplus RU file.

1. Start Remote Link and create or open the control panel account that matches the panel to be updated.
2. Set the Connection Information Type to Direct with a baud rate of 38400 and choose the appropriate COM port.
3. Select Panel>Remote Update, then select the correct RU file for the panel.
4. Press and hold the LOAD button, then press and release the RESET button.
5. Release the LOAD button and click <Update> in Remote Link.
6. After the software update is completed, remove the 399 cable and press the RESET button to resume normal panel operation.

Model 400 USB Flash Module

1. Press and hold the LOAD button. While holding the LOAD button, press and release the RESET button
2. Release the LOAD button.
3. Connect the USB flash drive to the Model 400 and connect the assembly to the panels PROG header. The LED on the Model 400 will flash and display steady green.
4. Press and release the LOAD button on the Model 400 to initiate the firmware update. The LED on model 400 will flash slowly. If the LED displays fast flashes it means the firmware update was unsuccessful.
5. The update will take approximately 4.5 minutes and when complete the LED on the Model 400 will display steady green.
6. Press and release the RESET button then remove the USB flash drive and Model 400 assembly. For additional information see Model 400 USB Flash Module Installation Guide (LT-1402).

On-Board Z-Wave Connection

15.1 Description

The XTLplus features an on-board Z-Wave controller that allows short range radio control of Z-Wave devices that you or your installation company may provide such as; lighting control modules, thermostat controls, doors, and garage doors. Z-Wave Setup allows you to program the system to control the Z-Wave devices from Smartphones using the DMP Virtual Keypad App or with the Virtual Keypad Browser. The available setup options are: Add, List, Remove, Favorites, Transfer and Optimize.

On-Board Wi-Fi Network

16.1 Description

The XTLplus connects directly to a Wi-Fi network for TCP communication using a Wireless-B/G connection. The XTLplus uses wireless 802.11b/g Wi-Fi technology.

16.2 Wi-Fi LEDs

The Green Wi-Fi LED is located to the right of the wireless LEDs in the upper right of the circuit board. Wi-Fi LED displays solid when the network is connected and is off when there is no network connectivity. See Figure 4 for Wi-Fi LED location.

Cellular Connection

17.1 Description

The CELL MODULE header is provided to connect a 265C CDMA Cellular Communicator. The 265C provides an integrated PCB antenna. Refer to the 265C Cellular Communicator Installation Guide (LT-1450) complete installation information.

Installing the 265C on the XTLplus:

1. Avoiding a sharp angle and keeping the 265C PCB parallel to the XTLplus PCB, slide the 265C PCB into the XTLplus 8-pin CELL MODULE connector. Apply even pressure to the end of the 265C PCB to fully seat the module. See Figure 5.
2. Align the standoff hole in the 265C with the standoff on the XTLplus PCB and snap in place.

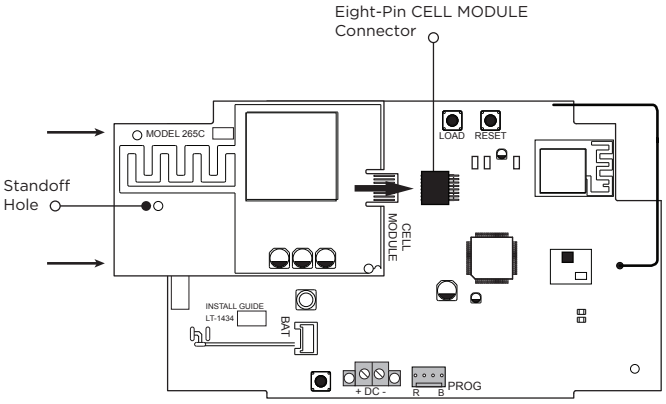

Figure 5: 265C Installed on the XTLplus

Wireless Keypads

18.1 Mounting Wireless Keypads

DMP Wireless keypads have removable covers that allow the base to be mounted on a wall, desk stand or other flat surface using the screw holes provided on each corner.

Programming Introduction

19.1 Before You Begin

Before starting to program, we recommend you read through the contents of this manual. The information in this document allows you to quickly learn the programming options and operational capabilities of the XTLplus panel.

After this Introduction, the remaining sections describe the functions of each of the programming menu items along with their available options. The panel contains all of its programming information in an on-board processor and does not require an external programmer.

In addition to this manual, you should also be familiar with the following XTLplus documents:

- XTLplus User's Guide
- XTLplus Fast Programming Sheet
- XTLplus Programming Sheet

Programming Information Sheet

Included with each XTLplus panel is the Programming Sheet. This sheet lists the various options available for programming the panel. Before starting, completely fill out the sheet with the programming options you intend to enter into the panel.

Having completed programming sheets available while entering data helps to prevent errors and can shorten the length of time you spend programming. Completed sheets also provide you with an accurate account of the panel's program you can keep on file for future system service or expansion.

The remainder of the Introduction explains starting and ending a programming session.

19.2 Getting Started

Ground yourself before handling the panel! Touch any grounded metal before touching the panel to discharge static.

The panel should be completely installed before you begin programming. Make sure the AC and battery wires are correctly installed.

Program from a Wireless or LCD Keypad

The panel can be programmed using a wireless keypad that has been auto paired or manually associated with the panel. You can also program the panel using an LCD keypad connected to the panel PROG header.

Auto WPS

The panel offers a convenient way to connect to a Wi-Fi network. Press the WPS button on your router within 5 minutes of powering the panel to automatically connect to the Wi-Fi network.

Wireless Keypad Auto Pairing

Wireless keypad auto pairing allows you to skip the Wireless Keypad Association process and automatically connect your keypad to the panel. Auto pairing is only available for 9800 Series Wireless Graphics Touchscreen Keypads (Version 109 or higher) that do not have a previously assigned house code. A maximum of four wireless keypads are allowed on each panel.

To pair a 9800 Series keypad with an XTLplus panel, power up both the panel and the keypad. A 10 minute pairing timer begins. The auto pairing process starts immediately and the keypad displays Pairing Keypad With System. See Figure 6. If the panel acquires the keypad during that time, the home screen displays signaling that pairing is complete.

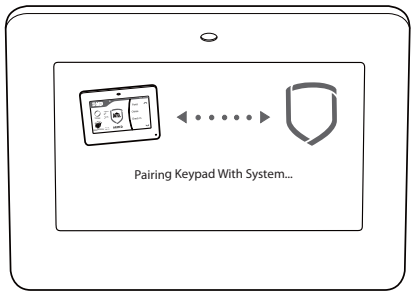

Figure 6: Auto Pairing in Progress Display

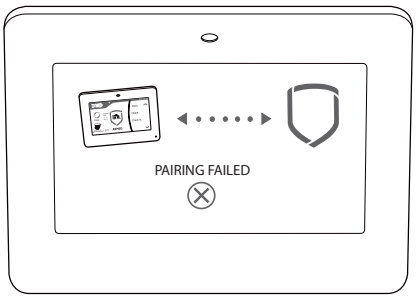

Figure 7: Auto Pairing Failed Display

If the panel does not acquire the keypad by the end of the 10 minute pairing timer, the keypad displays Pairing Failed, followed by the Reset screen. See Figure 7 and Figure 8. Reset your panel and tap the Pair button to restart the pairing process.

If the keypad loses communication with the panel, the No Communication With System display appears and provides the option to reattempt pairing. See Figure 9.

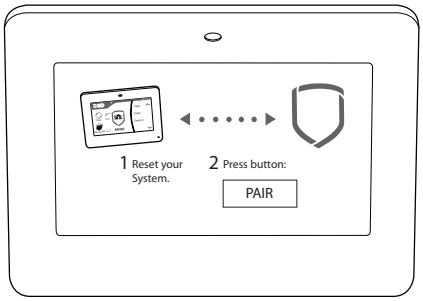

Figure 8: Auto Pairing Reset Display

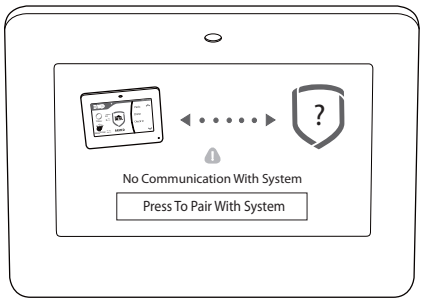

Figure 9: Auto Pairing No Communication Display

Wireless Keypad Association

To enable wireless keypad association operation on a LCD Wireless keypad, press and hold the Back Arrow and CMD until SET BRIGHTNESS displays. Enter the code 3577 (INST) and press CMD. Press KPD RF to start the RF survey communication. The keypad displays its wireless serial number and RF SURVEY.

To enable association operation on a Wireless Graphics Touchscreen keypad, access the Options menu through the carousel menu. While in the Options display, press the Installer Options icon. Enter the code 3577 (INST) and press CMD. Press KPD RF to start the RF survey communication. The keypad displays its wireless serial number and RF SURVEY.

The keypad Power/Armed LED turns Red, indicating communication has not yet been established with the panel receiver.

To enable association operation in the XTLplus Series panel, press the XTLplus Series RESET button three times allowing the wireless TRANSMIT LED (TX) located near the top of the PCB to begin flashing between each press. When in keypad association, the XTLplus Series Red and Green logo LEDs turn on steady.

For 60 seconds, the panel listens for wireless keypads that are in RF Survey and have not been programmed, or associated into another panel. Wireless keypads are assigned to the first open device position in Device Setup automatically, based upon the order in which they are detected. When successful communication has been established, the Power/Armed LED turns Blue on Graphics keypads or Green on LCD keypads.

Note: A maximum of four wireless keypads are allowed on each panel.

See the 9000 Series Wireless Keypad Installation Guide (LT-1107) or 9862 Graphic Touchscreen Wireless Keypad Installation Guide (LT-1367) for additional information.

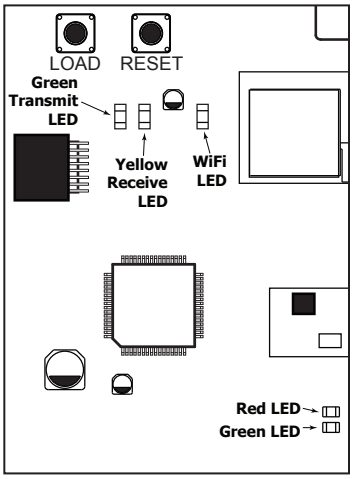

Figure 10: XTLplus Backlit Logo LED's

Arming Type Auto Detect (on select keypads)

When the XTLplus panel's arming type (A/P, H/S/A, Area) is changed, 9800 Series keypads (Version 109 or higher) will automatically sync their arming type to match the panel. This prevents you from having to manually change the keypad arming type to match the XTLplus panel's settings.

19.3 Keypad

Associate up to four DMP 9060, 9062 Wireless LCD Keypads or 9862 Graphic Touchscreen Wireless Keypads to the XTLplus panel. The operation is shown and described in the following sections.

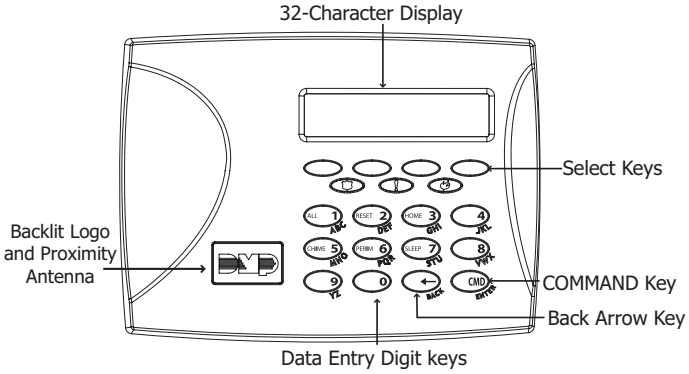

Figure 11: 9000 Series Wireless Keypad

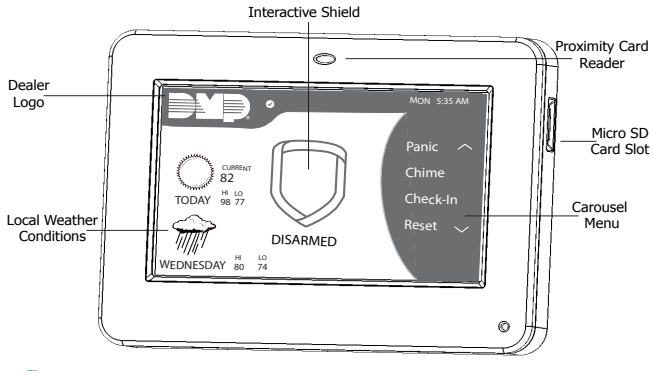

Figure 12: 9862 Graphic Touchscreen Keypad

19.4 Special Keys

The following special keys or areas are common to all DMP keypads.

COMMAND (CMD) Key

Pressing the COMMAND key allows you to go forward through the programming menu and through each step of a programming section. As you go through the programming, the keypad display shows any current programming already stored in the panel memory. If no change is required for an option, press the COMMAND key to advance to the next step.

The COMMAND key is also used to enter information into the panel's memory such as phone numbers or zone names. Press the COMMAND key after entering information.

Back Arrow (<—) Key

Use the Back Arrow key to back up one step while programming. The Back Arrow key is also used when an error is made while entering information. Press the Back Arrow key once to erase the last character entered.

Select Keys or Areas

The top row of keys are called the select keys on Thinline and Aqualite keypads or select areas on Graphic Touchscreen keypads. Each time you need to press a select key or area, the keypad displays the function or options above one of the keys or in the select areas. Displaying choices above individual select keys or in select areas allows them to be used for many different applications. For example, you can enter AM or PM when programming the automatic test time or answer **YES** or **NO** for a system option.

During programming, the select keys allow you to change information currently in panel memory by pressing the appropriate select key under the display. You then enter the new information using the keypad data entry digit keys.

When there are more than four response options available, press the COMMAND key to display the remaining options. Pressing the Back Arrow key allows you to review the previous four choices.

The select keys are also used for choosing a section from the programming menu. When the programming section name you want displays, press any select key.

On Wireless, Thinline and Aqualite keypads, when instructed to press the first select key, press the far left select key; the second select key is the second from the left; third select key is second from the right; and the fourth select key is the far right key. See Figure 11.

On Graphic Touchscreen Keypads, when instructed to press the first select key, touch select area 1; the second select key touch select area 2; third select key touch select area 3; and the fourth select key touch select area 4. See Figure 12.

19.5 Entering Alpha Characters

Some options during programming require you to enter alpha characters. To enter an alpha character, press the key that has that letter written below it. The keypad displays the number digit of the key. Next, press the select key or area that corresponds to the location of the letter under the key. Pressing a different select key or area changes the letter. When another digit key is pressed, the last letter displayed is retained and the process starts over.

19.6 Entering Non-Alpha Characters

To enter a space in an alpha entry, press the 9 digit key followed by the third select key or area. The three characters on the 9 digit key are Y, Z, and space. You can also enter the following characters: – (dash), . (period), * (asterisk), and # (pound sign) using the 0 (zero) key and the four select keys or areas from left to right. For example, to enter a – (dash), press 0 (zero) and then the left select key or area. A dash now appears in the keypad display. The table below shows the character locations for DMP keypads.

Number	Select Key or Area 1	Select Key or Area 2	Select Key or Area 3	Select Key or Area 4
1	A	B	C	(
2	D	E	F	)
3	G	H	I	!
4	J	K	L	?
5	M	N	O	/
6	P	Q	R	&
7	S	T	U	@
8	V	W	X	,
9	Y	Z	space	_
0	-	.	*	#

19.7 Keypad Displays Current Programming

Each programming option displayed at the keypad shows the currently selected option in the panel memory. These options are either shown as a number, a blank, or a NO or YES. To change a number or blank to a new number, press any select key. The current option is replaced with a dash. Press the number(s) on the keypad you want to enter as the new number for that option. It is not necessary to enter numbers with leading zeros. The panel automatically right justifies the number when you press the COMMAND key.

To change a programming option that requires a NO or YES response, press the select key for the response not selected. See Figure 13.

For example, if the current option is selected as YES and you want to change it to NO, press the third select key. The display changes to NO. Press the COMMAND key to display the next option.

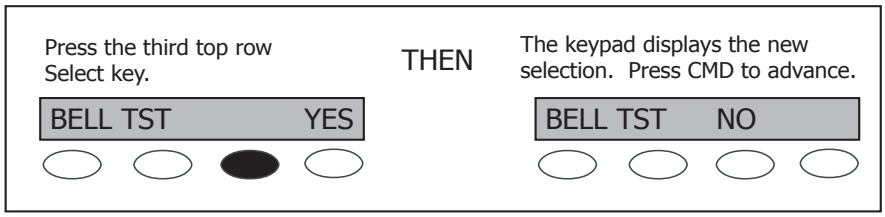

Figure 13: Changing the Current Programming Option

19.8 Programming Menu

Accessing the Programmer

To access the programmer function of the XTLplus:

Use a standard LCD keypad, connect to the PROG header and set the keypad to Address 1.

Press the RESET button for two seconds.

Enter the code 6653 (PROG).

The keypad displays: PROGRAMMER.

Remove the hardwired keypad when programming is completed.

You are now ready to start programming the XTLplus panel. Pressing the COMMAND key scrolls you through the programming menu items listed below.

Menu Item	Section in This Manual	Menu Item	Section in This Manual
Initialization	20	Bell Options	29
Fast Program	21	Output Options	30
Communication	22	Output Setup	31
Network Options	23	Area Information	32
Messaging Setup	24	Zone Information	33
Device Setup	25	Stop	34
Remote Options	26	Set Lockout Code	35
System Reports	27	Appendix	36
System Options	28		

To select a section for programming, press any select key when the name of that section displays on the keypad. The detailed instructions for each programming step are found in sections 20 to 35 of this manual.

19.9 Programmer Lockout Codes

Although the XTLplus panel allows access to Programming without a lockout code, it is available to program one to restrict programming access to authorized individuals only. You can do this by using SET LOCKOUT CODE at the end of the programming menu.

Installing a lockout code

1. After entering the Programmer menu, the keypad displays PROGRAMMER. Press the COMMAND key until SET LOCKOUT CODE is displayed (after STOP).
2. Press any select key. At the ENTER CODE: - display, enter a 1- to 5-digit programmer lockout code. Press COMMAND.
3. The display shows ENTER AGAIN. Enter the same lockout code again and press COMMAND. The display shows CODE CHANGED. The new code number must now be entered before the Programmer menu can be accessed.

The lockout code should be written down and kept in a secure place with access limited to authorized persons only.

Lost Lockout Code requires factory reset: If you lose or forget the lockout code, the panel must be sent back to the factory to be reset. There is no field option for gaining access to the panel without a valid lockout code.

19.10 Reset Timeout

The XTLplus has a feature that requires you to enter the Programmer within 30 minutes of resetting the panel. After 30 minutes, if you attempt to program by entering the 6653 (PROG) code, the keypad displays: RESET PANEL. You must reset the panel and enter the program code within the next 30 minutes.

If you are already in the Programmer and do not press any keys on the programming keypad for 30 minutes, the panel terminates programming. All data entered up to that point is saved in the panel's memory.

To exit the panel's Programmer you must use the Stop function. The STOP option is the second to the last option in programming. The programming session is then terminated and the keypad returns to the Status List.

Initialization

20.1 INITIALIZATION

Initialization

This function allows you to set the panel's programmed memory back to the factory defaults.

After you select YES to clear a section of memory, the panel asks if you are sure you want to clear the memory. This is a safeguard against accidently erasing part of your programming. No memory is cleared from the programming until you answer YES to the SURE? YES NO option.

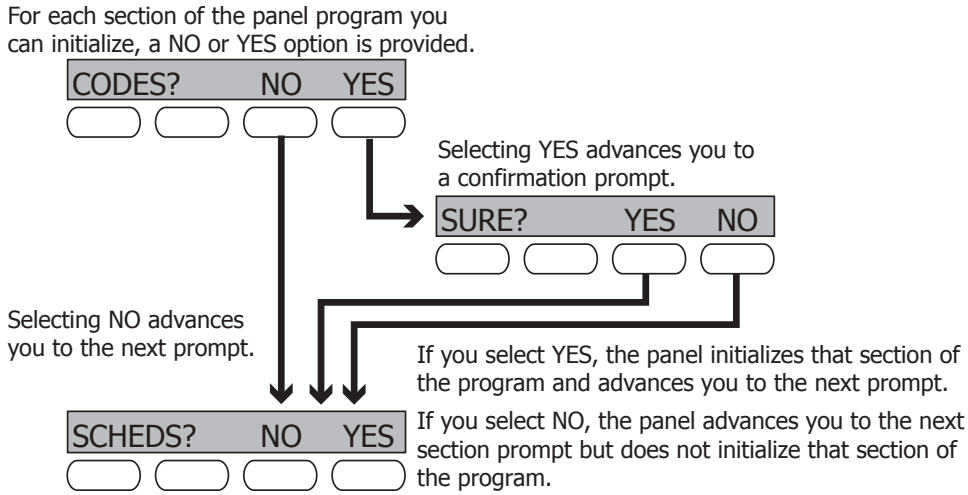

20.2 CODES? NO YES / SURE? YES NO

Clear All Codes

NO - leaves existing user codes intact.

YES - clears the user code memory and assigns the user code number 99 to user 99 on the XTLplus.

20.3 SCHEDS? NO YES / SURE? YES NO

Clear All Schedules

NO - Leaves existing schedules intact.

YES - Clears all schedules from the XTLplus programming.

20.4 EVENTS? NO YES / SURE? YES NO

Clear Events

NO - leaves existing event memory intact.

YES - clears all event memory currently held in the panel's Display Events buffer.

20.5 ZONES? NO YES / SURE? YES NO

Clear Zone Programming

NO - leaves existing zone information intact.

YES - sets all zones in the system to * UNUSED *.

20.6 COMM? NO YES / SURE? YES NO

Clear Communication

NO - Leaves existing communication and messaging programming intact.

YES - Resets communication and messaging programming to factory defaults.

20.7 CLEAR WIFI NO YES / SURE? YES NO

Clear Wi-Fi

NO - Leaves existing Wi-Fi programming intact.

YES - Resets Wi-Fi programming to factory defaults.

20.8 DEFAULTS? NO YES / SURE? YES NO

Set to Factory Defaults

Only use this procedure when the network primary controller is missing or otherwise inoperable.

NO - leaves the remainder of the existing panel programming intact.

YES - sets the panel's programming back to factory default selections and clears all Z-Wave device programming and Favorites from the panel. Selecting YES does not clear the panel's event memory, zones, user code information, or schedules.

Fast Programming

21.1 FAST PROGRAM

Fast Program

The **Fast Program** section allows you to quickly configure the essential settings for the XTLplus panel. When the panel programming defaults are acceptable for installation and only basic programming options are needed, FAST PROGRAM allows the installer to quickly enter information without navigating all of the programming menus. After choosing FAST PROGRAM, continue through the basic list of options.

21.2 ACCOUNT NO:

FIRST IP ADDR
0.0.0.0

Account Number

Enter the account number sent to the receiver. The range of account numbers are 1 to 65535. For account numbers of four digits or less, you do not have to enter leading zeros. The panel automatically right justifies the account number. See Communication.

21.3

FIRST IP ADDR
WPS? **NO** YES

SEARCHING

First IP Address

Enter the first (primary) IP address and press COMMAND. The panel displays WPS? NO YES. Press the fourth select area to choose YES. Press the WPS button on the router. WIFI SETUP SEARCHING displays until connected to the IP address. Advance to APP Key. See Communication.

21.4 APP KEY:

App Key

Enter the 8-digit App Key obtained in your Dealer Settings tab at dealeradmin.securecomwireless.com. See Remote Options.

21.5

SYSTEM: **ALL/PERIM**
AREA **A/P** H/A

System

This configures the panel as either a six Area system, an All/Perimeter system (Perimeter/Interior), or a Home/Away system (Perimeter, Interior, and Bedrooms). See System Options.

21.6 HRS FROM GMT: 6

Hours from GMT

Enter the number (0-23) that indicates the Greenwich Time zone (GMT) where the panel is located. See System Options.

21.7

ENTER WEATHER
ZIP CODE: **0**

Weather Zip Code

Enter the zip code of the panel at this option. See System Options.

21.8

ENTER SIREN
SERIAL#:-

Enter Siren Serial Number

Enter the eight-digit serial number for the wireless siren. The siren is automatically set to Output 61. See Output Setup.

21.9 ZONE NO: -

Zone Number

Enter the zone number to program. See Zone Information.

21.10 * DEFAULT NAME *

Zone Name

Press any select area to display the default zone name. To change the default zone name, press any select area to clear name. Enter up to 16 characters for the new zone name.

21.11 ZONE TYPE: -

Zone Type

To change the default zone type press any select area. See Zone Information.

21.12 AREA: -

Area Assignment

To change the default area, press any select area.

21.13 SERIAL #: -

Serial Number Entry

Enter the eight digit serial number, including leading zeros, found on the wireless device.

21.14 STOP

Stop

When all zones are programmed, press the Back Arrow key to display FAST PROGRAM. Press COMMAND to display STOP and press any select area to exit the Fast Program function and save the programming. See Stop.

Note: All programming options are still available by reentering the programming menu.

Communication

22.1 COMMUNICATION

Communication

The **Communication** section allows you to configure the communication settings for the XTLplus panel. After choosing the Communication Type, continue through the list of options.

22.2 ACCOUNT NO:

Account Number

Enter the account number sent to the receiver.

The range of account numbers are 1 to 65535. For account numbers of four digits or less, you do not have to enter leading zeros. The panel automatically right justifies the account number.

22.3 XMIT DELAY: **30**

Transmission Delay

Enter the number of seconds (15 to 45 seconds) the panel waits before sending burglary alarm reports to the receiver. The wireless siren and relay outputs are not delayed during this period. Enter 0 (zero) to disable this function. The default is 30.

22.4

COMM TYPE: CELL
WIFI CEL NONE

Communication Type

This specifies the communication method the panel uses to contact the receiver. Press any select area to display the following communication options:

WIFI - Network communication to DMP Model SCS-1R or SCS-VR Receivers.

CEL - This option allows communication over the cellular network using the 265C Cellular Communicator to DMP Model SCS-1R or SCS-VR Receivers.

NONE - For local systems. Selecting this ends communication programming.

Note: If automatic cellular activation is unsuccessful, cellular communication must be activated using the Activate Cell option provided in Diagnostics Function located in the Appendix.

22.5

BACKUP CELL
NO YES

Backup Cellular

Backup Cellular option is available if COMM TYPE is set for WIFI. The Backup Cellular tries to send the message after the main communication fails for 60 seconds on WIFI. If the backup cellular fails then the message is discarded.

22.6

TEST TIME
00:00 **AM**

Test Time

Press COMMAND to enter the Test Time. Enter the time of day the panel sends the test report to the SCS-1R Receiver. Use entries between 12:00 to 11:59 and then choose AM or PM.

22.7 TEST DAYS: **1**

Test Days

Enter how often the panel test report is sent to the receiver. Enter from 1 to 60 days. Enter zero to disable the test report. Default is 1 (one) day. This option only displays if a test time is entered.

22.8 CHECKIN: **0**

Check-In Minutes

Check-in reports are a method of supervising the panel for communication with the receiver. Enter the number of minutes between check-in reports. Select from 0 or 3-240 minutes. Entering 0 (zero) disables the check-in option. Default is 0.

Note: If the Cell Check-In option is used, additional cell charges may apply.

22.9 FAIL TIME: **240**

Fail Time

Fail Time allows the SCS-1R or SCS-VR receiver to miss a defined number of check-ins before logging that the panel is missing. For example, if CHECKIN is 20 and FAIL TIME is 30, the SCS-1R receiver only indicates a Panel Not Responding after 30 minutes. The FAIL TIME must be equal to or greater than the CHECKIN minutes: If the CHECKIN is 20 minutes, the FAIL TIME must be 20 or more. The maximum FAIL TIME is 240 minutes. Select from 0 or 3-240 minutes. The FAIL TIME defaults to what the CHECKIN is set to.

Closing Wait operation: Closing Wait operation is activated if Fail Time is set to 3 minutes and O/C Reports in System Reports is YES and O/C User reports in Communication Programming is set to YES.

Closing Wait provides a delay time before a monitored system arms until the panel receives an acknowledgment of the closing report from the central station receiver. During the delay, the keypad displays ONE MOMENT . . .

Once the closing is acknowledged from the SCS-1R receiver, the keypad buzzes for one second and then displays an armed status message. If the primary communication fails, the message LOCAL ALARM ONLY appears.

22.10 COMM TRBL **NO** YES

Send Communication Trouble

Enable communication fail notification by selecting YES at COMM TRBL. Select NO to disable. Default is NO.

When COMM TRBL is YES and the panel detects a failure of communication, the panel sends an S72 (Comm Trouble) message through a backup communication method with notification of the failure. If both primary and secondary methods of communication fail, then two S72 messages will be sent via the third communication method, if programmed.

When communication is restored, the panel sends an S73 (Comm Restored) message through the primary communication.

Note: If the primary or secondary communication type is CELL, S72 and S73 messages include the cell signal strength as a -dBm value.

22.11
FIRST CELL APN
SECURECOM400
-

First Cell APN

Enter the first APN (Access Point Name). This allows an access point for cellular communication and is used to connect to a DNS network. The APN may contain two lines of 16 characters to equal 32 characters. Default is set to SECURECOM400.

22.12
SECOND CELL APN
SECURECOM400
-

Second Cell APN

Enter the second APN (Access Point Name). This works as a backup in case the first APN fails. The APN may contain two lines of 16 characters to equal 32 character Default is set to SECURECOM400.

22.13 RECEIVER 1 PROG

Receiver 1 Programming

Allows you to set the options for the first receiver the panel attempts to contact when sending reports. The XTLplus supports communication to two receivers.

22.14 ALARM NO **YES**

Alarm Reports

YES enables Abort, Alarm, Alarm Restoral, Alarm Bell Silenced, Ambush, Exit Error, and System Recently Armed reports to be sent to this receiver. Default is YES.

22.15 SPV/TRBL NO **YES**

Supervisory/Trouble Reports

YES enables Supervisory, Trouble, Trouble Restoral, Force Armed, Late to Close, and Fault reports to be sent to this receiver. Default is YES.

22.16 O/C USER **NO** YES

Opening/Closing and User Reports

YES enables Opening/Closing, Code Changes, and Bypass reports by user to be sent to this receiver. Default is NO.

22.17 TEST RPT NO **YES**

Test Report

Enter **YES** to enable the Recall Test report to be sent to this receiver.

22.18
FIRST IP ADDR
000.000.000.000

First IP Address

Enter the first (primary) IP address where the panel sends network or cellular information. Enter all 12 digits and leave out the periods. For example, enter IP address 192.168.0.250 as 192168000250. The periods display automatically.

The message is sent using first Cell APN and the first IP Address. If no acknowledgment is received, first Cell APN and the second IP address are used, followed, if needed, by second Cell APN and first and second IP addresses, respectively.

22.19
FIRST IP PORT
2001

First IP Port

Enter the first IP port number to be used in conjunction with the first IP Address. The IP port identifies the port used to communicate messages to and from the panel. The default IP Port setting is 2001.

22.20
SECOND IP ADDR
000.000.000.000

Second IP Address

Enter the second (secondary) IP address where the panel sends network or cellular information. Enter all 12 digits and leave out the periods. For example, enter IP address 192.168.0.250 as 192168000250. The periods display automatically.

22.21
SECOND IP PORT
2001

Second IP Port

Enter the second IP port number to be used in conjunction with the second IP address. The IP port identifies the port used to communicate messages to and from the panel. The default IP Port setting is 2001.

22.22 RECEIVER 2 PROG

Receiver 2 Programming

Allows you to set the options for the second receiver the panel attempts to contact when sending reports. The XTLplus supports communication to two receivers. If you select **YES** for any of the Receiver 2 options, you must have at least one IP address programmed in Receiver 2 programming. Receiver 2 defaults are set to **NO**.

22.23 ALARM **NO** YES

Alarm Reports

YES enables Abort, Alarm, Alarm Restoral, Alarm Bell Silenced, Ambush, Exit Error, and System Recently Armed reports to be sent to this receiver. Default is **NO.**

22.24 SPV/TRBL **NO** YES

Supervisory/Trouble Reports

YES enables Supervisory, Trouble, Trouble Restoral, Force Armed, Late to Close, and Fault reports to be sent to this receiver. Default is **NO**.

22.25 O/C USER **NO** YES

Opening/Closing and User Reports

YES enables Opening/Closing, Code Changes, and Bypass reports by user to be sent to this receiver. Default is **NO**.

22.26 TEST RPT **NO** YES

Test Report

YES enables the Recall Test report to be sent to this receiver. Default is **NO**.

22.27 FIRST IP ADDR
000.000.000.000

First IP Address

Enter the first (primary) IP address where the panel sends network or cellular information. Enter all 12 digits and leave out the periods. For example, enter IP address 192.168.0.250 as 192168000250. The periods display automatically.

The message is sent using first Cell APN and the first IP Address. If no acknowledgment is received, first Cell APN and the second IP address are used, followed, if needed, by second Cell APN and first and second IP addresses, respectively.

22.28 FIRST IP PORT
2001

First IP Port

Enter the first IP port number to be used in conjunction with the First IP Address. The IP port identifies the port used to communicate messages to and from the panel. The default IP Port setting is 2001.

22.29

Second IP Address

Enter the second (secondary) IP address where the panel sends network or cellular information. Enter all 12 digits and leave out the periods. For example, enter IP address 192.168.0.250 as 192168000250. The periods display automatically.

22.30 SECOND IP PORT
2001

Second IP Port

Enter the second IP port number to be used in conjunction with the second IP Address. The IP port identifies the port used to communicate messages to and from the panel. The default IP Port setting is 2001.

Network Options

Network Options are provided to define the network configuration for the panel. This information will be used during communication of messages via network.

Note: Wi-Fi must be selected as Communication Type in the Communication section for Wi-Fi Setup to display.

Note: IP addresses and port numbers may need to be assigned by the network administrator. When entering an IP, Gateway, or Subnet Mask address be sure to enter all 12 digits and leave out the periods. For example, IP address 192.168.000.250 is entered as 192168000250.

23.1 NETWORK OPTIONS

Network Options

This option is for configuring the desired network settings. Press any select area to select.

23.2 WPS LIST MANUAL

TEST

Wi-Fi Setup

This option is for connecting to the desired Wi-Fi network and will display only when Comm Type is set to Wi-Fi. Press any select area to select.

WPS LIST MANUAL displays. Press the first select area to choose WPS to automatically connect to a WPS enabled router. Press the second select area to choose LIST and see the name and signal strength of any Wi-Fi routers in range. Press the third or fourth select area to choose MANUAL and enter the name of the Wi-Fi router you wish to connect to. Pressing COMMAND displays TEST. To select TEST press the first select area to verify connection of your system to the Wi-Fi network.

23.2.1 WPS

SEARCHING .

When WPS is selected, SEARCHING displays. Press the WPS button on the Wi-Fi network router to which you are attempting to connect. SEARCHING displays for up to two minutes or until connected to the WPS enabled router. Refer to the router's instruction manual for sending a security key to the XTLplus Series panel.

If the panel fails to connect to the WPS enabled router, WPS FAILED RETRY? NO YES displays. Press the fourth select area to RETRY or press the third select area to display WPS LIST MANUAL.

23.2.2 List

WPS LIST MANUAL

SEARCHING

SIGNAL ▌▌▌▌▌▌▌▌
HOMENET123

W/L SECURITY:
WPA-PSK

W/L SECURITY:
WEP WPA NONE

W/L KEY:
****

W/L KEY:
-

When LIST is selected, SEARCHING displays until any Wi-Fi networks are found in range. Once available Wi-Fi networks are found the keypad displays the name of the SSID (Wi-Fi Network name) and signal strength of each network. Press COMMAND to scroll through the list of available Wi-Fi networks. When the desired network is displayed, press any select area to connect.

Note: If the panel is unable to detect the security type, W/L SECURITY with the default security type WPA-PSK displays. If a different security type is required, press COMMAND and WEP WPA NONE displays. Press the select area of the desired security type to choose.

When connecting to the Wi-Fi network the panel also detects the security type in use and W/L KEY: ********** displays.

Enter the W/L KEY and the panel performs a connection test and CONNECTING displays. When successful, CONNECTED displays on the keypad. If the panel does not connect to the Wi-Fi network, NOT CONNECTED displays. Press COMMAND to return to the WIFI SETUP main screen.

23.2.3 Manual

WPS LIST MANUAL

WIFI SETUP
ENTER SSID

This option allows you to enter the desired network name using the keypad. When MANUAL is selected, the current settings display. Press COMMAND to continue with no change. SecureCom is the default.

Use the number keys on the keypad to enter a new or different SSID (Wi-Fi Network name), there is no need to press a select areas. Once the SSID is entered, press COMMAND and SEARCHING displays.

SSID:
SSID FOUND

When an SSID is entered for the first time or changed, the panel searches for the SSID entered to ensure communication. The keypad displays SSID FOUND or SSID NOT FOUND. When the SSID is found, the security type is also detected.

Note: Depending on the security type, the SSID might take several seconds to process.

Enter up to 32 characters for the SSID from the network router to identify the network LAN. The SSID is blank by default. Use the chart below to enter lowercase or special characters. Each successive press of the select key or area gives additional options. For example, to enter Me5%, you would press 5, select key or area 1 (M); press 2, select key or area 2 twice (e); press 5 (5); press 7, select key or area 4 twice (%).

Number	Select Key or Area 1	Select Key or Area 2	Select Key or Area 3	Select Key or Area 4	
1	A, a,	B, b	C, c	(, [, {	**Note:** When \ is entered, the keypad displays ¥. When ~ is entered, -> displays.
2	D, d	E, e	F, f	),], }	
3	G, g	H, h	I, i	!, ^, ~	
4	J, j	K, k	L, l	?, ", |	
5	M, m	N, n	O, o	/, \, `	
6	P, p	Q, q	R, r	&, $	
7	S, s	T, t	U, u	@, %	
8	V, v	W, w	X, x	, =	
9	Y, y	Z, z	space, :	_, ;	
0	-, +	., '	*, <	#, >	

SSID:
SSID NOT FOUND

While searching, SEARCHING displays on the keypad. If the panel can not connect to the desired network SSID NOT FOUND displays. Press COMMAND to return to the main menu and WPS LIST MANUAL displays. Press COMMAND again to display TEST.

23.2.4 TEST

Test

Press the first select area to select TEST and the panel will attempt to verify connection of your system to the desired Wi-Fi network.

23.3

W/L SECURITY:
WPA-PSK

W/L SECURITY:
WEP WPA NONE

Wireless Security Type

When successful, W/L SECURITY displays. Select the security type based on the network router programming. The default network security type is WPA-PSK. Press any select area to display the other security options. The available options are WEP, WPA, and NONE.

Press the first select area to choose WEP, press the second select area for WPA, press the third select area for NONE.

23.4

W/L KEY:
****

W/L KEY:
-

Wireless Network Key

This option displays only if Comm Type is set to Wi-Fi and Security option is not set to NONE. Enter the key provided from the network router's programming. WEP requires a network password of 10 characters (WEP64) or 26 characters (WEP128), using a combination of the number 0-9 and the letters A-F. WPA/WPA-PSK uses a custom key that allows 8 to 32 characters (See the chart above to enter lowercase or special characters). Press COMMAND to save the key.

Note: Depending on the security type, the key might take several seconds to process.

23.5 DHCP NO **YES**

DHCP

If the panel uses a dynamic IP address Select YES. When set to YES the panel operates in DHCP and will not use the Local IP Address number.

23.6

LOCAL IP ADDR
192.168.000.250

Local IP Address

Enter the local IP address for the panel. The Local IP Address must be unique and cannot be duplicated on the network. The default local IP address is 192.168.000.250.

23.7

GATEWAY ADDR
192.168.000.001

Gateway Address

Enter the local gateway address. The Gateway IP Address is needed to exit the local network. The default gateway address is 192.168.000.001.

23.8

SUBNET MASK
255.255.255.000

Subnet Mask

Enter the local subnet mask assigned to the panel. The default subnet mask address is 255.255.255.000.

23.9

DNS SERVER
192.168.000.001

DNS Server

Enter the IP address of the DNS (Domain Name System) used by the panel to resolve domain names into IP addresses. The default address is 192.168.000.001.

Note: The DHCP programming in the panel must be set to NO.

23.10

PROGRAMMING PORT
2001

Programming Port

Enter the programming port number. The programming port identifies the port used to communicate messages to and from the panel. The default Programming Port setting is 2001.

Messaging Setup

24.1 MESSAGING SETUP

Messaging Setup

This section allows you to enter the information needed to send and receive messages directly to and from the panel via MyAccess™ text messaging using cellular communication. All of the name and password options below allow up to 32 lowercase characters to be entered. The Destination addresses allow up to 48 characters to be entered. System Name is displayed with initial caps.

The transmitted messages are:

Zone Alarms by Zone Name	Early to Close
Zone Troubles by Zone Name	AC Power Trouble and Restoral
Zone Bypass by User	System Low Battery
Arming (Closings) by User	Ambush
Disarming (Openings) by User	Abort, Cancel and Alarm Verified by User
Late to Close	Check-in by User
Late to Open	

24.2 ENABLE MESSAGING **NO** YES

Enable Messaging

Select YES to allow the panel to send messages to three programmed destinations. Default is NO.

24.3 SYSTEM NAME -

System Name

Enter a unique name for the panel. The panel name is used as the sender of the message. The text entered is displayed with initial caps. If this field is left blank, the panel account number is sent.

24.4 DESTINATION 1 -

Destination 1

Enter the first cell phone number where text messages will be sent. The message can be sent to any device (computer or cell phone) as long as a valid cell phone number is entered.

24.5 DESTINATION 1 USER NUMBER: 0

Destination 1 User Number

Enter a valid, previously-programmed user number. This option is used when sending commands such as arming or disarming back to the pan el using MyAccess™ SMS Text from the same cell phone. The user number must have the authority to perform the commands as if it occurred at the keypad. Entering 0 (zero) disables this option. Default is 0.

24.6 DESTINATION 2 -

Destination 2

Enter the second destination cell phone number.

24.7 DESTINATION 2 USER NUMBER: 0

Destination 2 User Number

Enter a valid User Number for arming/disarming authorization.

24.8 DESTINATION 3

Destination 3

Enter the third destination cell phone number.

24.9 DESTINATION 3 USER NUMBER: 0

Destination 3 User Number

Enter a valid User Number for arming/disarming authorization.

24.10 O/C SMS **NO** YES

O/C SMS

Select YES to allow the panel to send Opening and Closing messages to a cell phone via SMS protocol. Default is NO. This option appears only if any destination above is a cell phone number.

24.11 MONTHLY LIMIT: **0**

Monthly Limit

This option displays if any programmed destination is a cell phone number using CELL communication. This number limits the monthly incoming and outgoing SMS messages allowed to be sent or received by the panel.

A panel event that causes messages to be sent to destination cell phone numbers is counted towards the panel's monthly limit. For example, if an alarm message is sent to a cell phone number, a total of 2 messages are counted towards the monthly limit for the panel. SMS messages sent from a cell phone to the panel, including status requests and MyAccess™ SMS Text messaging commands, also count toward the monthly limit. The limit is reset at midnight on the 14th of every month. Range is from 0 to 999. When 0 is entered, there is no limit on the number of messages able to be sent or received by the panel. Default is 0.

Note: The SecureCom Wireless text plan selected for the panel should match or exceed the programmed Monthly Limit.

DEVICE SETUP

Device Setup

25.1 DEVICE SETUP

Device Setup

This section allows you to define the XTLplus panel wireless keypad configuration. You can install and address up to four wireless keypads.

25.2 DEVICE NO:-

Device Number

Enter the device number of the wireless keypad you are programming. The valid range is 2-5.

Note: Address one is reserved for the XTLplus programming keypad attached during programming. After you program each option for the first keypad, repeat these programming steps for each additional keypad.

25.3 * UNUSED *

Device Name

This section allows you to define a 16 character alphanumeric name for the device number. If no name is entered, *UNUSED* is displayed.

To remove a keypad from the system, delete the device name by pressing any select area, then press the COMMAND key. The device name is now displayed as * UNUSED *.

25.4 WIRELESS? NO **YES**

Wireless

Select YES to use a wireless keypad. Default is YES.

25.5 SERIAL#: XXXXXXXX

Serial Number

Enter the eight-digit serial number found on the wireless keypad.

25.6 SUPRVSN TIME: **240**

Supervision Time

Press any top row key to select the supervision time required for the device. Press COMMAND to accept the default time. Default is 240 minutes.

SELECT MINUTES:
0 60 240

Press the select area under the required number of minutes. The device must check in at least once during this time or a missing condition is indicated for that device. Zero (0) indicates an unsupervised wireless keypad.

Note: When the panel is reset, panel is powered down and powered up, or programming is complete, the supervision timer restarts for all wireless keypads.

Remote Options

26.1 REMOTE OPTIONS

Remote Options

This section allows you to enter the information needed for Remote Command/ Remote Programming operation via Wi-Fi communication. A description of the Remote Options follows:

26.2 RMT KEY:

Remote Key

This option allows you to enter a code of up to eight digits for use in verifying the authority of an alarm or service receiver to perform a remote command/ programming session. The receiver must give the correct key to the panel before being allowed access. All panels are shipped from the factory with the Remote Key preset as blank.

To enter a new Remote Key, press any select area and enter any combination of up to 8 digits. The numbers you enter appear as asterisks.
Press COMMAND.

26.3 DISARM NO **YES**

Remote Disarm

Enter YES to enable the panel to be disarmed remotely. Selecting NO disables remote disarming. Default is YES.

26.4 APP KEY:

App Key

Enter the 8-digit App Key obtained in your Dealer Settings tab at dealeradmin.securecomwireless.com.

This option is a security feature of the Virtual Keypad iPhone/Android App used only when your Dealer Settings at dealeradmin.securecomwireless.com have “EASYconnect” set as the Communication Type.

This communication option is used to eliminate the need for a static IP address programmed in Network Options.

To enter the App Key, press any select area and enter any combination of 8 digits.

Press COMMAND. The default for this option is blank.

System Reports

27.1 SYSTEM REPORTS

System Reports

This function allows you to select the reports the XTLplus sends to the receiver.

27.2 O/C RPTS **NO** YES

Opening/Closing Reports

NO - No Opening/Closing Reports are sent.

YES - Sends Opening/Closing Reports for each programmed area.

27.3 ABORT **NO** YES

Abort Reports

YES allows the panel to send an Alarm Abort Report to the receiver any time an area is disarmed during Transmit Delay before an alarm report is sent and the Bell Cutoff Time has not expired. See the Bell Cutoff section. The area must be disarmed and no zones that were in alarm can still be armed.

YES also allows a Bell Silenced Report to be sent if the alarm bell is silenced with a valid user code during an alarm. Default is NO.

Note: Alarm Cancel or Verify Reports are sent if the alarm is canceled or verified after being sent to the alarm receiver, if the Bell Cutoff timer has not expired. The Abort Reports option does not affect Cancel or Verify reports.

The panel will not send Abort reports for Fire zones, or Supervisory-type zones.

27.4 RESTORAL **YES**
NO YES DISARM

Zone Restoral Reports

This option allows you to specify whether the panel sends zone restoral reports and when they will be sent.
NO - Restoral reports are not sent by the panel.
YES - The panel always sends zone restoral reports at the time the zone restores from an alarm or trouble condition.
DISARM - The panel sends zone restoral reports when a zone that has restored from an alarm or trouble is disarmed. Twenty-four hour zones send restorals immediately.

27.5 BYPASS NO **YES**

Bypass Reports

YES allows the panel to send all zone bypass, reset, and force arm reports to the receiver. The bypass report includes the zone number, zone name, and the user number of the individual bypassing the zone.

27.6 CODE CHG **NO** YES

Code Change Reports

YES allows the panel to send all code additions, changes, and deletions to the receiver. The code change report includes the user number added or deleted and the user number of the individual making the change.

27.7 AMBUSH **NO** YES

Ambush

YES allows an ambush report to be sent any time user code number one is entered at a keypad. Selecting NO disables the ambush report and allows user code number one to operate the same as all other codes.

27.8 LATE TO OPEN
MINUTES: **0**

Late To Open

Enter 1-240 as the number of minutes to elapse that the system may remain armed after the opening time of a schedule without sending a Late To Open message. If the system continues to be armed after the Late to Open minutes expire, a Late To Open message is sent to the central station. Default is 0, which disables the Late To Open option.

27.9 EARLY TO CLOSE
MINUTES: **0**

Early To Close

Enter 1-240 as the number of minutes that the system can be armed prior to the scheduled closing time. If the system is armed prior to the Early to Close minutes, an Early To Close message is sent to the central station. Default is 0, which disables the Early to Close option.

System Options

28.1 SYSTEM OPTIONS

System Options

This section allows you to select system wide parameters used in the operation of the XTLplus panel. A description of each System Option follows:

28.2 SYSTEM:**HOME/AWAY**
AREA A/P **H/A**

System

This configures the panel as either a Home/Away system (Perimeter, Interior, and Bedrooms), an All/Perimeter system (Perimeter/Interior), or a six Area system. Zones must be assigned to Bedrooms for the area to be active.

Wireless zones in an Area or All/Perimeter system resound the trouble buzzer every four hours when zone trouble or low battery is displayed.

28.3 CLS CODE **NO** YES

Closing Code

When YES is selected, a code number is required for system arming. If NO is selected, a code number is not required for system arming. Default is NO.

28.4 CLS CHK **NO** YES

Closing Check

Select YES to enable the panel to verify that all areas have been armed after a schedule expires. If the Closing Check finds any areas disarmed past the scheduled time, all keypads emit a steady beep and display CLOSING TIME!. The user must extend the schedule or arm the system within 10 minutes or a Late to Close message is sent to the central station. Default is NO.

28.5 ENTRY DLY 1: **30**
ENTRY DLY 2: **60**

Entry Delay 1

Enter the entry delay time for all exit type zones programmed to use Entry Delay 1. When an armed Exit type zone is faulted, the keypad prewarn tone begins sounding. ENTER CODE: - and the name of the zone causing the Entry Delay displays on all keypads.

When the first digit of a code is entered, the prewarn tone stops at the keypad. If, within five seconds, a valid user code is not entered or an invalid user code is entered, the prewarn tone begins sounding again. Fifteen seconds must elapse before entering a digit silences the prewarn tone again.

The area must be disarmed before the entry delay expires or an alarm is detected. All Burglary type zones in all areas are delayed along with the Exit zone.

Entry delay times can be from 30 to 250 seconds. Repeat the above for Entry Delay 2 if it is being used. Default is 30 seconds for Entry Delay 1.

Note: Specific Exit Error operation is based on the Entry Delay used (1 or 2) with an EX type zone. See Exit Delay.

28.6 EXIT DELAY: **60**

Exit Delay

Enter the Exit Delay time for all Exit type zones. When the exit delay time starts, all activity on exit and burglary zones is ignored until the exit delay expires. The keypad displays the Exit Delay time countdown and annunciates the Exit Delay tone at 8 second intervals until the last 10 seconds when annunciation is at 3 second intervals. The exit delay can be from 45 to 250 seconds. Default is 60 seconds. During Exit Delay, if an exit zone trips, then restores, and trips again, the Exit Delay timer restarts. This restart can occur only once.

Exit Error Operation: At arming, when an entry/exit zone (EX) is faulted at the end of the exit delay then one of two sequences occur:

For Entry Delay 1 EX type zones:

- The bell sounds for the length of time set in Bell Cutoff programming
- The Entry Delay operation starts, requiring code entry to disarm
- If not disarmed, a zone alarm and an Exit Error are sent to the receiver

For Entry Delay 2 EX type zones:

- The zone is force armed and a zone force arm message is sent to the receiver
- An Exit Error is sent to the receiver
- The bell sounds for the length of time set in Bell Cutoff programming

28.7 CRS ZONE TM: **0**

Cross Zone Time

Enter the time allowed between zone faults. When a zone programmed for cross zoning faults, the panel begins counting down the Cross-Zone Time entered here. If the same zone or another cross-zoned zone faults within this time, an alarm report is sent to the receiver.

If the Cross-Zone Time expires without the second zone fault, only a zone fault report from the first zone is sent to the receiver. The Cross-Zone Time can be from 4 to 250 seconds in one second increments. Enter 0 (zero) to disable the Cross-Zone Time feature. Default is 0 (zero). See the Appendix.

28.8 PWR FAIL HRS: **1**

Power Fail Delay

This option tracks the duration of an AC power failure. The delay time can be from 1 to 9 hours. When the AC power is off for the length of the programmed delay time, an AC power failure report is sent to the receiver. For example, if the power failure delay is set for two hours, then the AC power failure report will be sent between 2-3 hours. Entering a 0 (zero) sends the AC power failure report within 15 seconds. Default is 1.

28.9 SWGRBYPS TRIPS: **2**

Swinger Bypass Trips

Enter the number of times (1-6) a zone can go into an alarm or trouble condition within one hour before being automatically bypassed. Bypassed zones are automatically reset when the area they are assigned to is disarmed. All 24-hour zones are reset when any area of the system is disarmed. A programming Stop operation restores a bypassed zone. Entering 0 (zero) disables this function. Default is 2.

How it works

The panel hour timer starts at 59 minutes past the hour. If the hour timer expires before the trip counter is exceeded, the trip counter returns to 0 (zero). If the trip counter is exceeded before the hour expires, the zone is automatically bypassed by the panel. A Bypass Report is sent to the receiver if Bypass Reports is YES.

Note: Not investigated by Intertek.

28.10 RST SBYP **NO** YES

Reset Swinger Bypass

When YES is selected, an automatically bypassed zone is reset if it remains in a normal condition for one complete hour after being bypassed. A report of the automatic reset is sent to the receiver if Bypass Reports has been selected as YES. Default is NO.

Note: Not investigated by Intertek.

28.11 ZN ACTY HRS: **0**

Zone Activity Hours

This option provides supervision of a person living alone for non-activity. Enter the number of hours, 0 to 9, allowed to elapse without a disarmed zone being tripped before a message is sent to the receiver. Default is 0 (zero).

When the system is disarmed, the timer begins to countdown the number of hours programmed. Each time activity occurs, the timer restarts the countdown. Before the countdown time expires, the keypad sounds a tone and PRESS ANY KEY displays to allow the user to restart the activity timer. The duration of the tone is the number of seconds programmed for Entry Delay 2.

Select the SUPV/TRBL receiver option in communication programming to send S93 ALARM: User Activity Not Detected, S94 Alert: Activity Check Enabled, and S95 Alert: Activity Check Disabled messages.

When an open/close schedule is programmed, the timer only counts down during the scheduled open period. Also, when a schedule is programmed, if the timer is counting down and the scheduled open time occurs, the timer resets and begins the countdown again.

28.12 ARM ACTY DAYS: **0**

Arm Activity Days

This allows selection of the number of days a countdown timer is set for area arming and disarming activity. The range for the countdown timer is 00 to 99. When the timer counts down to zero because of no arming or disarming activity, the panel sends a “No Arming/Disarming” message to the receiver at 10:00 AM. Each time an area is armed or disarmed, the timer is restarted. When the countdown timer expires because of no arming or disarming activity, and a message is sent, the timer does not restart until a panel reset occurs or an area is armed or disarmed.
The SUPV/TRBL receiver option must be selected in communication programming for the message to be sent.

28.13 TIME CHG NO **YES**

Time Zone Changes

This option allows the panel to request automatic time changes from the DMP SCS-1R Receiver. For the receiver to send time changes, it must be programmed to send time changes and must be receiving time change updates from the host automation computer at least every 24 hours. Default is YES.

HRS FROM GMT: **6**

When time zone is programmed YES, enter the number (0-23) that indicates the Greenwich Time zone (GMT) where the panel is located. The default is 6. See table for GMT values.

GMT	City/Time Zone
0	London, Monrovia, Lisbon, Dublin, Casablanca, Edinburgh
1	Cape Verde Island, Azores
2	Mid-Atlantic, Fernando de Noronha
3	Buenos Aires, Georgetown, Brasilia, Rio de Janeiro
4	Atlantic Time (Canada), Caracas, La Paz, Santiago
5	Eastern Time (US, Canada) Bogota, Lima, Arequipa
6	Central Time (US, Canada), Mexico City, Saskatchewan
7	Mountain Time (US, Canada), Edmonton
8	Pacific Time (US, Canada), Tijuana
9	Alaska
10	Hawaii
11	Midway Island, Samoa
12	Fiji, Marshall Island, Wellington, Auckland, Kwajalein, Kamchatka

GMT	City/Time Zone
13	New Cadelonia
14	Guam, Sydney
15	Tokyo, Seoul
16	Hong Kong, Singapore
17	Bangkok, Hanoi
18	Dhaka, Almaty
19	Islamabad, Karachi
20	Abu Dhabi, Kazan
21	Moscow, Bagdad
22	Eastern Europe
23	Rome, Paris, Berlin

28.14 TIME DSP NO **YES**

Time Display

YES allows the keypad to display the time and day in the Status List. When NO is selected, time and day of the week are not displayed.

28.15 HOUSE CODE: -

House Code

A Wireless House Code between 1 and 50 is pre-programmed at the factory. To change the house code, press any select area. Enter a House Code from 1 to 50 and press the CMD button. The XTLplus automatically programs the house code into the wireless transmitters when the unique transmitter serial number is programmed into the panel. See Wireless programming in Zone Information. The house code identifies the panel, receiver, and transmitters to each other. When operating, the receiver listens for transmissions that have the programmed house code and transmitter serial number.

28.15.1 DET JAMNG **NO** YES

Detect Wireless Jamming

When enabled and the receiver detects jamming, a trouble or alarm message is sent to the receiver and displays in the Status List. Select YES to enable jamming messages to display in the Status List. Select NO to disable jamming messages. Default is NO.

28.15.2 WLS AUDIBLE: **DAY**

Wireless Audible Annunciation

Press any top row key to select the keypad buzzer annunciation method for wireless low battery and missing messages.

ANY **DAY** MIN

Select ANY to enable annunciation anytime.

Select DAY to enable annunciation except during sleeping hours (9 PM to 9 AM).

Select MIN (minimum) to annunciate only Fire zones during daytime hours (9 AM to 9 PM). Default is DAY.

28.16 KPD PANCS NO **YES**

Enable Keypad Panic Keys

This option allows the two-button panic key operation selected at a keypad to send the Panic, Emergency, or Fire message to the central station receiver. Select YES to enable the two-button panic operation. To disable the two-button panic operation, select NO. Default is YES.

28.17 OCCUPIED PREMISE **NO** YES

Occupied Premises

Select YES to allow the panel to automatically disarm the interior area(s) when arming all areas and a perimeter zone is not tripped during the exit delay.

This False Alarm Reduction feature keeps a user from arming the entire system when they do not exit and remain in the premises. Select NO to not automatically disarm interior area(s). Default is NO.

28.18 USE FALSE ALARM QUESTION? NO **YES**

Use False Alarm Question

Select YES to display IS THIS A FALSE ALARM? NO YES at the keypad in place of CANCEL VERIFY when a burglar alarm occurs. Select NO to display CANCEL VERIFY for burglar alarms. This operates for ALL/PERIM and HOME/SLEEP/AWAY arming systems. Default is YES.

28.19 ENTER WEATHER ZIP CODE: **-**

Weather Zip Code

This option allows local U.S.A. weather updates to display in the Status List on the keypad. Enter the zip code of the user at this option. When no number is entered weather conditions are not displayed. Default is **-**.

Bell Options

29.1 BELL OPTIONS

Bell Options

This section allows you to program the panel bell output functions. If using the Model 1135 or 1135DB Wireless Siren, the Trip with Panel Bell option should be selected in the Output Information programming for the siren.

29.2 BELL CUTOFF: **5**

Bell Cutoff Time

Enter the maximum time from 1 to 15 minutes that a wireless output remains on. If the output is manually silenced or the system is disarmed, the cutoff time is reset. Default is 5.

29.3 BELL TEST **NO** YES

Automatic Bell Test

When YES is selected, the 1135/1135DB wireless siren is turned on for two seconds when all areas in the system are armed. The Bell Test only occurs when the areas are armed from a keypad. Arming performed from an Arming zone or remotely from Remote Link™ does not activate the Bell Test.

Closing Wait operation

When Bell Test is set to YES, the closing wait function also operates. Closing Wait provides a delay time before a monitored system arms until the panel receives an acknowledgment of the closing report from the central station receiver. During the delay, the keypad displays ONE MOMENT . . . Once the closing is acknowledged, the keypad buzzes for one second and then displays the ALL SYSTEM ON message. If communication fails, the message LOCAL ALARM ONLY appears.

29.4 BELL OUTPUT: **0**

Bell Output

Enter the output number (51-54, 61-64) for an 1116 or 1117 wireless output when needed to follow the on and off condition of the bell action. Enter 0 (zero) to disable.

Note: When BELL ACTION below is set to T for Temporal Code 3, this Bell Output action will be Pulse for wireless outputs 51-54 and 61-64.

29.5 BELL ACTION . . .

Bell Action

This defines the type of Bell Action from zone alarms that will occur. Trouble conditions do not activate Bell Action. There are seven zone types you can program individually for Bell Output. To provide a steady Bell Output, enter S. For a pulsed output, enter P. For a Temporal Code 3 output, enter T and for no bell action, enter N.

29.5.1 FIRE TYPE: **T**

Fire

Defines Bell Action for Fire Type Zones. The default is set at T.

29.5.2 BURGLARY TYPE: **S**

Burglary

Defines Bell Action for Burglary Type Zones. The default is set at S.

29.5.3 SUPRVSRY TYPE: **N**

Supervisory

Defines Bell Action for Supervisory Type Zones. The default is set at N.

29.5.4 PANIC TYPE: **N**

Panic

Defines Bell Action for Panic Type Zones. The default is set at N.

29.5.5 EMERGNCY TYPE: **N**

Emergency

Defines Bell Action for Emergency Type Zones. The default is set at N.

29.5.6 AUXLRY 1 TYPE: **N**

Auxiliary 1

Defines Bell Action for Auxiliary 1 Type Zones. The default is set at N.

29.5.7 AUXLRY 2 TYPE: **N**

Auxiliary 2

Defines Bell Action for Auxiliary 2 Type Zones. The default is set at N.

Output Options

30.1 OUTPUT OPTIONS

Output Options

This section allows you to program output options for the 1116 and 1117 wireless outputs. Select from the following output numbers:

- 51 to 54
- 61 to 64
- F01 to F20 (To Activate Z-Wave Favorites)

30.2 COM FAIL OUT: 0

Communication Failure Output

This output/Favorite turns on when the panel fails to communicate with the receiver after three communication attempts. Enter 0 (zero) to disable this output.

Note: To turn off the Communication Failure Output, disarm the panel or turn the output off using the User Menu Outputs On/Off function.

30.3 FIRE ALR OUT: 0

Fire Alarm Output

This output turns on any time a fire type zone is placed in alarm. The output turns off using the Sensor Reset option when no additional fire type zones are in alarm. Enter 0 (zero) to disable this output.

30.4 FIRE TRB OUT: 0

Fire Trouble Output

This output/Favorite turns on any time a fire type zone is placed in trouble or when a supervisory type zone is placed in alarm or trouble. The output turns off when all fire and supervisory type zones restore to normal. Enter 0 (zero) to disable.

30.5 AMBUSH OUT: 0

Ambush Output

This output/Favorite turns on any time an Ambush code is entered at a keypad. The output turns off using the Sensor Reset option. Enter 0 (zero) to disable this output.

30.6 BEGIN EXIT: 0

Begin Exit Output

This output/Favorite turns on any time an exit delay time starts. The output turns off when the system arms or when the arming has been stopped. Enter 0 (zero) to disable.

30.7 END EXIT: 0

End Exit Output

This output/Favorite turns on any time an exit delay time ends. The output turns off when the system disarms. Enter 0 (zero) to disable.

30.8 READY OUT: 0

Ready Output

This output/Favorite turns on whenever all disarmed zones are in a normal state. The output turns off when any disarmed zone is in a bad state. Enter 0 (zero) to disable.

30.9 ARMED HOME: 0
ARMED SLEEP: 0
ARMED AWAY: 0
ARMED ALL: 0
ARMED PERIM: 0
ARMED OUT: 0

Armed Output

The entered output turns on any time the system is armed. The keypad display is dependent on the system's arming type.

For Home/Away systems, only the HOME and AWAY screens display. If a Bedroom area is programmed into the panel, the SLEEP screen also displays. For All/Perimeter systems, the ALL and PERIM screens display. For Area systems, the OUT screen displays.

All options are defaulted to 0 (zero). The output turns off when the system completely disarms. Enter 0 (zero) to disable this output.

30.10 DISARMED OUT: 0

Disarmed Output

This output/Favorite turns on when all areas of the panel are disarmed. The output turns off when an area is armed.

30.11 BURGLARY OUT: 0

Burglary Output

This output/Favorite turns on any time a burglary zone goes into alarm. The output turns off when the area in which the alarm occurred disarms and no other burglary zones are in alarm. Enter 0 (zero) to disable this output.

30.12 ARM-ALARM OUT: 0

Arm-Alarm Output

Enter the output/Favorite to turn on steady when any area of the system is armed. If an alarm occurs causing the keypads to turn Red, this output pulses and continues to pulse for approximately three (3) minutes after the panel is disarmed. Enter 0 (zero) to disable.

Wireless Outputs

The Arm-Alarm Output is compatible with the Model 1117 Wireless LED Annunciator and the Model 1116 Wireless Relay Output connected to a Model 572 Indicator LED.

When the Model 1117 is battery operated, the LED is off when the system is armed to conserve battery life. If an alarm occurs, the output flashes quickly.

When using the Model 1116 connected to a Model 572, the LED is on when the system is armed. If an alarm occurs, the output pulses.

To operate the Arm-Alarm output within one second, program a fast response number from 61 to 64. Fast response operation reduces overall wireless output battery life.

To operate the Arm-Alarm output within 15 seconds, program a slow response number from 51 to 54. Slow response operation increases overall wireless output battery life.

30.13 HEAT SAVER TEMPERATURE: 0

Heat Saver Temperature

Enter the desired temperature setting for all Z-Wave thermostats when the system is armed ALL or AWAY. When the system is disarmed the thermostats return to their previous settings. The range is 55-95 degrees. Enter 0 (zero) to disable.

30.14 COOL SAVER TEMPERATURE: 0

Cool Saver Temperature

Enter the desired temperature setting for all Z-Wave thermostats when the system is armed ALL or AWAY. When the system is disarmed the thermostats return to their previous settings. The range is 55-95 degrees. Enter 0 (zero) to disable.

OUTPUT SETUP

Output Setup

31.1 OUTPUT SETUP

Output Setup

This section allows you to program and name wireless outputs into the panel.

31.2 OUTPUT NO: -

Output Number

Enter an output number. Select from the following output numbers:

- 51 to 54 — Slow response time* wireless outputs (activate within 15 seconds)
- 61 to 64 — Fast response time* wireless outputs (activate within 1 second)

Note: Addresses 51 to 54 and 61 to 64 are available for wireless outputs or wireless key fob zones and can only be assigned to one device.

* The response time of a wireless output is the time it takes for a wireless output to activate once the panel event occurs. You determine whether a wireless output is a slow or fast response based on the output number assigned. A slow response output number extends battery life, but response time may be up to 15 seconds. A fast response output number responds within 1 second, but reduces battery life. Refer to the specific wireless output installation guide to determine battery life.

31.3 * UNUSED *

Output Name

This section allows you to define a 16 character alphanumeric name for any wireless output.

An output that is not part of the system must be marked * UNUSED *. To mark an output unused, press any select area to display the default name, then press the COMMAND key. The programmer automatically programs the name as * UNUSED *.

31.4 SERIAL#: -

Serial Number

Enter the eight-digit serial number found on the wireless device.

ALREADY USED: ZXX

This message displays when the serial number is already programmed for another output or zone. The programmed output or zone number displays.

31.5 SUPRVSN TIME: 240

Supervision Time

Press any top row key to select the supervision time required for the wireless output. Press COMMAND to accept the default time. Default is 240 minutes.

0 3 60 **240**

Select the required number of minutes. The transmitter must check in at least once during this time or a missing condition is indicated for that zone. 1100 Series transmitters automatically check in based on the supervision time selected for the wireless zone, no additional programming is needed. Zero (0) indicates an unsupervised transmitter.

The 3 minute supervision time is only available if using an 1135 Wireless Siren.

Note: When the panel is reset, a receiver is installed or powered down and powered up, or programming is complete, the supervision timer restarts for all wireless outputs.

31.6

```
TRIP  WITH  PANEL
BELL          NO  YES
```

Trip with Panel Bell Option

This option displays when the wireless device is an 1135 wireless siren. Select YES to have the 1135 wireless siren follow the panel bell output. Default is YES.

Area Information

32.1

```
AREA INFORMATION
```

Area Information

This section allows you to assign functions to individual areas for XTLplus panels. All non-24-hour zones must be assigned to an active area. See the section on Zone Information.

Activate an area by assigning it a name. A name is given to each active area to assist the user during arming and disarming.

32.2

```
AREA NO: -
INT              PERIM
INT    BDRM    PERIM
```

Area Number

Enter the number of the area to program. In an area system, select from areas 1 to 6.
In an All/Perimeter system, select INTerior or PERIMeter.
In a Home/Away system, select INTerior, BDRM, or PERIMeter.

32.3

```
* UNUSED *
```

Area Name

In an area system, enter up to 16 characters for the area name. Only those areas given names can have zones assigned to them. All others are marked *UNUSED*.

To add an area name to the system, press any select area and then enter up to 16 characters for the new name. Refer to the Entering Alpha Characters section. Press COMMAND to continue.

To mark an active area as unused, delete the old name by pressing any select area then press the COMMAND key. The panel automatically sets the name as *UNUSED*. If you have already Initialized the panel, all areas will be marked as *UNUSED*. See section 2.3.

32.4

```
AUTO ARM  NO     YES
```

Automatic Arming

Select YES to allow this area to arm automatically according to the opening and closing schedule.

If Closing Check is selected as YES, the automatic arming does not take place until the expiration of a 10-minute Closing Check delay. If the area has been disarmed outside a schedule, the Closing Check delay occurs one hour after the area is disarmed.

At arming, faulted zones are handled according to the option selected in Bad Zones. If a Closing report is sent, the user number is indicated as SCH on the SCS-1R Receiver. Select NO to disable automatic arming for this area. Default is NO.

32.4.1

```
BAD ZONES:       BYP
BYP    FORC       REF
```

Bad Zones

At the time of automatic arming, some zones in the area may not be in a normal condition. This option allows you to program the panel's response to these bad zones. This option is not displayed if AUTO ARM is NO.
BYP - All bad zones are bypassed. A report of the bypass is sent to the receiver if Bypass Reports has been selected as YES. See the Bypass Reports section. The report indicates SCH as the user number.

FORC - All bad zones are force armed. Zones force armed in a bad condition are capable of restoring into the system and reporting alarms if tripped. A report of the force arm is sent if Bypass Reports is YES. See the Bypass Reports section. The report indicates the user number as SCH.

REF - The automatic arming is refused and no arming takes place. A No Closing report is sent to the receiver regardless of the Closing Check selection.

Note: For listed installations, set Bad Zones to REF.

32.5

```
AUTO DIS  NO     YES
```

Automatic Disarming

NO disables automatic disarming by schedule for this area. Select YES to allow this area to automatically disarm according to a schedule. If an Opening report is sent to the receiver, the user number is indicated as SCH.

Zone Information

33.1 ZONE INFORMATION

Zone Information

This allows you to define the operation of each protection zone used in the system.

33.2 ZONE NO: -

Zone Number

Zone numbers on the XTLplus panel default to the following settings. The settings can be changed as described in the following sections. Zones 51-54 can be wireless zones, key fobs or slow outputs. Zones 61-64 can be wireless zones, key fobs, or fast outputs.

Zone Number	Zone Name	Zone Type	Area Assignment
1	FRONT DOOR	EX	PERIM
2	BACK DOOR	EX	PERIM
3	GARAGE ENTRY DR	NT	INT
4	PATIO DOOR	EX	PERIM
5	BASEMENT DOOR	EX	PERIM
6	GARAGE DOOR	EX	PERIM
7	WAREHOUSE DOOR	EX	PERIM
8	SHIPPING DOOR	EX	PERIM
9	BREAKROOM DOOR	NT	INT
10	STOCKROOM DOOR	NT	INT
11	FRONT MOTION	NT	INT
12	BACK MOTION	NT	INT
13	HALLWAY MOTION	NT	INT
14	UPSTAIRS MOTION	NT	INT
15	BASEMENT MOTION	NT	INT
16	GARAGE MOTION	NT	INT
17	GLASSBREAK	NT	INT
18	WATER DETECTOR	SV	INT
19	LOW TEMPERATURE	SV	INT
20	SMOKE DETECTOR	FI	PERIM
21	FRONT SMOKE	FI	PERIM
22	BACK SMOKE	FI	PERIM
23	HALLWAY SMOKE	FI	PERIM
24	UPSTAIRS SMOKE	FI	PERIM
25	BASEMENT SMOKE	FI	PERIM
26	OFFICE SMOKE	FI	PERIM
27	WAREHOUSE SMOKE	FI	PERIM
28	SHIPPING SMOKE	FI	PERIM
29	STORAGE SMOKE	FI	PERIM
30	SHED DOOR	EX	PERIM
31	SHOP DOOR	EX	PERIM
32	OFFICE DOOR	NT	PERIM
33	BREEZEWAY DOOR	NT	PERIM
34	SHOP WINDOW	NT	PERIM
35	OFFICE WINDOW	NT	PERIM
36	BREEZEWAY WINDOW	NT	PERIM
37	BASEMENT WINDOW	NT	PERIM
38	SHED MOTION	NT	PERIM
39	SHOP MOTION	NT	PERIM
40	OFFICE MOTION	NT	PERIM
41	BREEZEWAY MOTION	NT	PERIM
42	DRIVEWAY BEAM	NT	PERIM
43	CASHIER PANIC	PN	PERIM
44	OFFICE PANIC	PN	PERIM
45	CO DETECTOR	FI	PERIM
46	EMERGENCY PENDNT	PN	PERIM
47	GARAGE HEAT	AUX 1	PERIM
48	UTILITY ROOM HT	AUX 1	PERIM
51	OUTPUT 1		PERIM
52	OUTPUT 2		PERIM
53	OUTPUT 3		PERIM

54	OUTPUT 4		PERIM
61	ALARM SOUNDER 1		PERIM
62	ALARM SOUNDER 2		PERIM
63	ALARM SOUNDER 3		PERIM
64	ARM/ALARM/LIGHT		PERIM

33.3 KEYFOB **NO** YES

Key Fob

Select YES to program an 1144 Series Key Fob for zones 51-54 or 61-64.
When YES is selected, programming continues at the 1144 Series Key Fobs Section.
Default is NO.

33.4 * UNUSED *

Zone Name

Press any select area to display the default zone name. To change the default zone name, press any select area to clear name. Enter up to 16 characters for the new zone name. This name is displayed at the keypads when the zone is bad or viewed in Display Events. The zone name is also sent to the receiver as part of a zone event report.

A zone that is not part of the system must be marked *UNUSED*. To mark a zone unused, delete the old name by pressing any select area, then press the COMMAND key. The programmer automatically programs the name as * UNUSED *. If you selected ZONES? NO YES to clear the panel's memory during Initialization, the zones will already be marked * UNUSED *. See the Initialization section.

33.5 ZONE TYPE: -

Zone Type

The Zone Type defines the panel's response to the zone being opened or shorted. Refer to the Appendix for zone type defaults and descriptions.

Each zone has a default type. When you assign a Zone Type to a zone, responses are made automatically for the zone. There are 11 Zone Types to choose from including Blank. The functional details of each response are described in Zone Type Defaults in the Appendix.

To change the Zone Type, press any select area. The display lists the four Zone Types shown below. When the Zone Type you want to select displays, press the select area below the name.

-- NT DY EX — Blank, Night, Day, or Exit. Press COMMAND to display additional zone types.

FI PN EM SV — Fire, Panic, Emergency, or Supervisory. Press COMMAND to display additional zone types.

A1 A2 FV AR — Auxiliary 1, Auxiliary 2, Fire Verify, or Arming. Press the Back Arrow key to display the previous zone types.

If you select Blank, Night, Day, Exit, Auxiliary 1, or Auxiliary 2 as the Zone Type, the zone must be assigned to an area. If you select Fire, Panic, Emergency, or Supervisory as the Zone Type, these are 24-hour zones that are always armed and no area assignment is needed. Press COMMAND to continue.

Refer to the Appendix for zone type specifications and descriptions.

33.6 AREA:

Arming Zone Assignment

For Area systems, this option specifies the areas to be armed by the Arming Type zone. Press the appropriate number keys on the keypad to assign areas 1 to 6. When disarmed, all programmed areas are disarmed.

ARM AREA: **PERIM** — For All/Perimeter systems, choose PERIM or ALL. For Home/Away systems, choose HOME, SLEEP, or AWAY.

PERIM ALL — Perimeter/All - Specify whether the arming zone arms just the Perimeter (PERIM) or the Perimeter and Interior areas (ALL) for All/Perimeter systems. When disarming, all areas are disarmed.

HOME SLEEP AWAY — HOME/SLEEP/AWAY - Specify whether the arming zone arms the Perimeter (HOME), the Perimeter and Interior (SLEEP), or all three areas (AWAY). When disarming, all areas are disarmed.

Arming zone operation

If a bad (faulted) Priority zone is in the area being armed by an Arming zone, the arming is stopped. If there are no Priority zones, or they are all in a normal condition, the following applies:

When a non-Priority zone is bad when an area is armed with a keyswitch on an Arming zone, the arming is delayed for five seconds. If, during the five-second delay, the keyswitch is turned to disarm, the arming stops. If the keyswitch is held in the arming position for the full five seconds, the bad zone is force armed and the area is armed.

The ability to stop the arming does not apply if a wireless arming device is being used. Refer to the Appendix.

Note: Arming from a zone, Wi-Fi, or Remote Link is not affected by this operation.

33.7 Area Assignment

AREA: -

To change the default area, press any select area.

For Area systems, enter the area number from 1 to 6 where this zone is being assigned.

INT PERIM

For All/Perimeter systems, choose INTERIOR or PERIMETER.

INT BDRM PERIM

For Home/Away systems, choose INTERIOR, PERIMETER, or BEDROOMS.

- INT (Interior) - Assigns the zone to area 2, Interior.
- BDRM (Bedroom)- Assigns the zone to area 3, Bedrooms. This option is only displayed in Home/Away systems.
- PERIM (Perimeter) - Assigns the zone to area 1, Perimeter.

33.7.1 Style

STYLE: **TOGGLE**

This option specifies the style for the arming/disarming operation. The default for STYLE: is TGL (toggle). Pressing any select area displays the STYLE options. To view more style options press the command key. The following is a description of the action for each option condition.

TGL ARM DIS STEP

TGL (Toggle) - When the zone changes from normal to shorted, the programmed areas toggle between the armed or disarmed condition. When restored to normal, no action occurs. When the zone is opened from a normal (disarmed) state, a trouble is reported. When opened from a shorted (armed) state, an alarm is reported and the zone is disabled until you disarm the area(s) from either a keypad or Remote Link™ computer.

ARM - When the zone is shorted, the programmed areas are armed. When restored to normal, no action occurs. When the zone is opened from a normal (disarmed) state, a trouble is reported. When opened from a shorted (armed) state, an alarm is reported.

DIS (Disarm) - When programmed as an Area system, a short will disarm the programmed areas. When programmed as a ALL/PERIM or HOME/AWAY system, a short will disarm ALL areas. When restored to normal, no action occurs. When the zone is opened from a normal (disarmed) state, a trouble is reported.

STEP - When programmed as an area system, a short will arm the areas and beep the keypads once. When programmed as ALL/PERIM or HOME/AWAY, on the first short HOME will arm and beep the keypad once. On the second short, SLEEP will arm and beep the keypads twice. On the third short, AWAY will arm and beep the keypad three times. A normal condition will cause no action. An open condition will disarm the programmed areas and beep the keypads for one second.

Note: This arming style is designed for wireless arming pendants. When using a arming/disarming keyswitch, locate the keyswitch within the protected area.

MNT

MNT (Maintain) - When the zone is shorted, the programmed areas are armed. When restored to normal, the programmed areas are disarmed and any alarm bells are silenced. When the zone is opened from a normal (disarmed) state, a trouble is reported. If opened from a shorted (armed) state, an alarm is reported and the zone is disabled until you disarm the area(s) from either a keypad or Remote Link™ computer.

33.8 DMP Wireless

For wireless key fob programming see the 1144 Series Key Fob section.

Note: All wireless programming is stored in the XTLplus panel. Each time the panel powers up, when the programmer STOP routine is selected or the panel is reset, the wireless receiver memory refresh could take up to 45 seconds to complete depending on the number of wireless zones programmed and the Red LED remains on during this time. Normal wireless receiver operation is inhibited during the memory refresh period.

33.8.1 Serial Number Entry

SERIAL #: -

Enter the eight digit serial number, including leading zeros, found on the wireless device.

33.8.2 Contact

INT EXT

This option displays if the serial number entered is for an 1101, 1103, or 1106 Universal Transmitter or 1114 Wireless Four-Zone Expander. Press any top row key to select the contact.

This option displays when programming an 1101, 1103, or 1106 Universal Transmitter. Select INT to use the internal reed switch contacts. Select EXT to connect an external device to the 1101, 1103, or 1106 terminal block. Default is INTERNAL.

By allowing both of the transmitter contacts (INT and EXT) to be used at the same time, two zones may be programmed from one transmitter. When using multiple contacts, you must use consecutive zone numbers.

For example, program transmitter serial number 01345678 as Zone 11 with an INT contact type and Zone 12 with an EXT contact type. The same serial number is used for both zones.

CONTACT: x

This option displays when programming an 1114 zone expander which provides four input contacts. Press any top row key to select the contact. Default is Contact 1.

1 2 3 4

Select the contact number to program. The same transmitter serial number is used for all four contacts. When using the contacts, you must use consecutive zone numbers.

For example, use serial number 08345678 to program Contact 1 for Zone 21, Contact 2 for Zone 22, Contact 3 for zone 23, and Contact 4 for zone 24.

A tamper on the 1114 is transmitted as the zone number assigned to Contact 1.

ALREADY USED Zxx

This message displays when the Contact is already programmed for another zone. The programmed zone number displays.

NORM OPEN **NO** YES

The Normally Open option only displays when EXT is selected as the Contact type. For external devices connected to the 1101 terminal block, select NO to use normally closed (N/C) contacts. Select YES to use normally open (N/O) contacts. Default is NO.

33.8.3 Supervision Time

SUPRVSN TIME: XX

Press any top row key to select the supervision time required for the wireless zone. Press COMMAND to accept the default time. Default is 240 minutes.

0 3 60 **240**

Select the required number of minutes. The transmitter must check in at least once during this time or a missing condition is indicated for that zone. 1100 Series transmitters automatically checkin based on the supervision time selected for the wireless zone, no additional programming is needed. If two zones share the same transmitter, the last programmed supervision time is stored as the supervision time for both zones. Zero (0) indicates an unsupervised transmitter.

The 3 minute supervision time is only available for zone types of Fire (FI), Fire Verify (FV), and Supervisory (SV).

Note: When the panel is reset the supervision timer restarts for all wireless zones.

33.8.4 LED Operation

LED OPER NO **YES**

This only displays when programming a panic or pendant transmitter. Select YES to turn a panic or pendant LED on during normal operation. Select NO to turn the LED off during normal operation. The LED always operates on all transmitters when the transmitter case is open and the tamper is faulted. Default is YES.

33.8.5 Disarm/Disable

DISARM DISABLE
NO YES

Select YES to disable the Zone Tripped message from 1101/1102/1106 Universal Transmitters (Verison 108 or higher software), 1103 Universal Transmitters (Version 107 or higher software), or 1126/1127 PIRs during the disarmed period. When disarmed, the transmitter or PIR only sends Supervision, Tamper, and Low Battery messages to extend transmitter battery life. For transmitters, a Zone Tripped message is sent if the zone remains tripped for 20 seconds. Leaving the panel defaulted to NO causes the panel to always send Zone Tripped messages in addition to Supervision, Tamper, and Low Battery.

33.8.6 Wireless PIR Pulse Count

WIRELESS PIR
PULSE COUNT: 4

Select the number of infrared pulse counts (2 or 4) the PIR will use before sending a short message. The first infrared pulse starts a timer and count. If no additional infrared pulses occur in 25 seconds, the timer and count are reset. Default is 4.

33.8.7 Wireless PIR Sensitivity

WIRELESS PIR
SENSITIVITY: LOW

Select the sensitivity setting for the PIR. Selecting LOW sets the PIR to operate at 75% sensitivity for installations in harsh environments. Selecting HIGH sets the PIR to maximum sensitivity. Default is LOW.

33.8.8 Next Zone

NEXT ZN NO YES

Select YES to return to the ZONE NO: - option to program a new zone. Select NO to display the Alarm Action option.

33.9 1144 Series Key Fobs

Only zones 51-54 or 61-64 can be programmed as 1144 Series Key Fob zones. Refer to the 1100 Series Key Fob Programming Sheet (LT-0706) and the 1144 Series Key Fob Install Guide (LT-1449) as needed.

To operate arming and disarming properly, the Key Fob should be assigned to a User Number with appropriate area assignments, however, the User Number does not have to exist at the time the Key Fob is programmed. The

User Number can be added at the User Menu later by the User.

The following programming continues from when Key Fob YES is selected.

33.9.1 KF USER NO:

Key Fob User Number

Enter the User Number used to identify the key fob user and their arming and disarming authority. Default is blank.
— User number range: 1 to 99

NOT IN USE

Displays when the User Number entered does not exist in User Code programming. The key fob can be added, but the user must eventually be added to cause the key fob to operate.

33.9.2 SERIAL #: -

Key Fob Serial Number

Enter the eight-digit serial number found on the wireless device.

ALREADY USED Zxx

Displays when the serial number is already programmed. The programmed zone number displays.

33.9.3 SUPRVSN TIME: **0**

Key Fob Supervision Time

Press any top row key to select the supervision time required for the key fob zone. Press COMMAND to accept the default time. Default is 0.

0 60 240

Press the select area under the required number of minutes. The key fob must check in at least once during this time or a missing condition is indicated for that zone. 1144 Series key fobs automatically checkin based on the supervision time selected for the wireless zone, no additional programming is needed. Zero (0) indicates an unsupervised transmitter.

Note: When the panel is reset the supervision timer restarts for all wireless zones.

33.9.4 BUTTONS: 4

Number of Key Fob Buttons

Enter the number of buttons (1, 2, or 4) on the key fob being programmed. Default is four buttons.

Note: If the key fob is a one-button model, programming continues at the Button Action section. Default button assignment for one-button key fobs is a Panic Alarm (PN) with no output assigned.

33.9.5 TOP BTM LFT RGT

Key Fob Button Selection (Four Buttons)

This option only displays if the key fob being programmed is a four-button model. Press the select key under the key fob button to program. The following list identifies the default button assignments:

TOP Arming with areas 1, 2, and 3 assigned
BTM Disarming with areas 1, 2, and 3 assigned
LFT Panic Alarm (PN) with no output assigned
RGT Arming with Area 1 assigned

33.9.6 TOP BTM

Key Fob Button Selection (Two Buttons)

This option only displays if the key fob being programmed is a two-button model. Press the select area under the key fob button to program. The following list identifies the default button assignments:

TOP Arming with areas 1, 2, and 3 assigned
BTM Disarming with areas 1, 2, and 3 assigned

33.9.7 ACTION: XXXXXXX

Button Action

This option specifies the Button Action for an individual key fob button. The default action for the button selected is displayed. Press any select area to display the Button Action options. To view more options press the COMMAND key.

ARM DIS TGL STA

ARM (Arm) - Arms selected areas and force arms bad zones.

DIS (Disarm) - Disarms selected areas.

TGL (Toggle Arm) - Toggles arm/disarm for selected areas and force arms bad zones when arming.

STA (Status) - Causes the key fob LED to indicate the arm/disarm status of the system.

PN PN2 EM EM2

PN (Panic) - Triggers a Panic zone type alarm with no restoral.

PN2 (Panic 2) - Triggers a Panic zone type alarm with no restoral when pressed simultaneously with any other Panic 2 button. No action occurs when pressed alone.

EM (Emerg) - Triggers an Emergency zone type alarm with no restoral.

EM2 (Emerg 2) - Triggers an Emergency zone type alarm with no restoral when pressed simultaneously with any other Emergency 2 button. No action occurs when pressed alone.

OUT RST UN

OUT (Output) - Causes an output to turn on steady, pulse, momentary, toggle or off.

RST (Sensor Reset) - Causes the panel to perform a standard Sensor Reset.

UN (Unused) - The button is not used and performs no action.

33.9.8 PRESS TIME: XXXXX Button Press Time

This option specifies the amount of time (SHORT or LONG) the user must press the button before the key fob sends a message to the wireless receiver. The default press time displays. Press any select area to set the Button Press Time for Arm, Disarm, Toggle, Status, Output, and Sensor Reset.

Note: The Button Press Time is not programmable on Panic (PN or PN2), Emergency (EM or EM2) or Unused (UN) zones. For those zones the button press time is always two (2) seconds.

SHORT LONG

SHORT - Press the button for one-half (1/2) second to send the message to the wireless receiver.

LONG - Press the button for two (2) seconds to send the message to the wireless receiver.

33.9.9 AREA: 1 2 3 4 5 6 Arm/Disarm Area Selection

For Area systems, enter the areas 1 to 6, to be armed/disarmed by the Key Fob button being programmed.

ARM AREAS: PERIM

This specifies the area to be armed by the Key Fob button being programmed.
For All/Perimeter systems, choose PERIM or ALL.
For Home/Sleep/Away or Home/Away systems, choose HOME, SLEEP, or AWAY.

After selecting the areas, for one-button key fobs the Zone No.: option displays. For two-button or four-button key fobs, the Key Fob Button Selection option displays to program additional buttons.

33.9.10 OUTPUT NO: 0 Output Number

You can specify a wireless output to operate when OUT (Output), PN (Panic), PN2 (Panic 2), EM (Emergency), or EM2 (Emergency 2) is selected for a key fob Button Action and the button is pressed. Valid range is 51-54, 61-64, and F1-F20. For an output turned on by a PN, PN2, EM, or EM2 button action, the output turns off when any area is disarmed.

To enter an output number, press any select area followed by the output number. Press the COMMAND key.

33.9.11 ACTION: Output Action

This option allows you to define the output action (STD, PLS, MOM, TGL, OFF) for the selected output number. The default is Steady.

STD PLS MOM TGL

STD (Steady) - The output is turned on and remains on.

PLS (Pulse) - The output alternates one second on and one second off.

MOM (Momentary) - The output is turned on only once for one second.

TGL (Toggle) - The output alternates between the on state and off state. Each button press toggles the output state.

OFF

OFF (Off) - The output is turned off. If programmed, the output was turned on by some other means such as another button press, a zone action, or a schedule.

Note: When the output is assigned to PN/PN2 or EM/EM2 button action and is turned on, the output turns off when any area is disarmed.

When the output action is steady, pulse or toggle and the output is turned on, the output remains on until:

— the output cutoff time expires

— the output is reset from the keypad menu

— toggled off

33.10 ALARM ACTION . . . Alarm Action

The Alarm Action section allows you to change or confirm the default alarm characteristics of a zone type.

If you selected the non-24-hour zone type Blank, Night, Day, Exit, Auxiliary 1, or Auxiliary 2, the Alarm Action programming begins with Disarmed Open.

If you selected the 24-hour zone type Fire, Panic, Emergency, or Supervisory, the Alarm Action programming begins with Armed Open.

33.11 DISARMED OPEN

Disarmed Open

Defines the action taken by the panel when the zone is opened while the area is disarmed. There are three actions to define:

- Message to Transmit
- Output Number
- Output Action

You must also make these selections for the Disarmed Short, Armed Open, and Armed Short zone conditions. Press the COMMAND key to continue.

33.11.1 MSG: **TROUBLE**

Message To Transmit

You can send two report types to the receiver: Alarm and Trouble. These are represented by the characters A and T. Press any select area to display the zone report options.

A T L -

ALARM - Selecting A allows an alarm report to be sent to the receiver and the wireless siren output to activate according to zone type. See the Bell Action section. The zone name appears in the panel's alarmed zones status lists.

TROUBLE - Selecting T allows a trouble report to be sent to the receiver and the zone name to appear in the panel's alarmed zones status lists.

LOCAL - When you select L, an alarm report is NOT sent to the receiver. The bell output still activates according to zone type and the zone name appears in the panel's alarmed zones status lists.

– (dash) - When you select – , reports are NOT sent to the receiver. The wireless siren output does not activate and there is no display in the panel's alarmed zones status list. Only the programmed Output Number activates.

33.11.2 OUTPUT NO: 0

Output Number

You can specify any of the outputs on the XTLplus to be activated by a zone condition. The output can be activated regardless of the report to transmit or whether or not the zone is programmed as local. An output activated by a non-24-hour armed zone is turned off when the zone's area is disarmed by a user.

To enter an Output Number, press any select area followed by the output number 51-54, 61-64, or F1-F20. Press the COMMAND key.

33.11.3 ACTION:

Output Action

Entering an Output Number displays this option that allows you to assign an output action. A description of the available output actions is given below:

STD PLS MOM FOLW

STEADY - The output is turned on and remains on until the area is disarmed, an output cutoff time expires, or the output is reset from the keypad User Menu.

PULSE - The output alternates one second on and one second off until the area is disarmed, an output cutoff time expires, or the output is reset from the keypad User Menu.

MOMENTARY - The output is turned on only once for one second.

FOLLOW - The output is turned on and remains on while the zone is in an off normal, or bad condition. When the zone restores, the output is turned off.

After you have selected the Message To Transmit, the display prompts you for the same three selections for Disarmed Short, Armed Open, and Armed Short conditions. If the zone is a 24-hour type, only the Armed Open and Armed Short conditions are displayed. When you have programmed all of the zone conditions, the Swinger Bypass selection is then displayed.

33.12 SWGR BYP NO **YES**

Swinger Bypass

Selecting YES allows the zone to be swinger bypassed by the panel according to the programming in Swinger Bypass Trips and Reset Swinger Bypass. The Bypassed zone displays in the keypad Status List. Selecting NO disables swinger bypassing for this zone.

How it works

If within one hour, a zone trips the total number of times as specified in Swinger Bypass Trips, the panel bypasses it until the following conditions occur; the area in which the zone is assigned is disarmed, the zone is manually reset through the Bypass Zones keypad User Menu function, the zone remains normal for one hour and the Reset Swinger Bypass is YES.

If the zone trips fewer than the specified times within one hour of the first trip, the bypass trip counter returns to 0 (zero) and the process must be repeated.

A report of the swinger bypass is sent to the receiver if Bypass Reports is YES.

33.13 PREWARN: 12345

Prewarn Address

Option is only shown for an Exit zone.

At the start of the entry delay, all keypad addresses display ENTER CODE:-. If you want the prewarn to sound at all addresses, leave the default as shown.

To delete an address, press the matching number on the keypad. To disable prewarning at all keypads, press a top row key to clear the addresses shown. Press the COMMAND key when the address selection is complete.

Note: The prewarn tone stops at the keypad when the first digit of a user code is entered. If, within five seconds, a valid user code is not entered or an invalid user code is entered, the prewarn tone begins sounding again. Fifteen seconds must elapse before entering a digit silences the prewarn tone again.

33.14 ENTRY DELAY: 1

Entry Delay

Option is only shown for an Exit zone. Select the entry delay timer for this zone. Entry delay timers 1 and 2 are programmed in Entry Delay in the System Options menu.

33.15 CRS ZONE **NO** YES

Cross Zone

Select **YES** to enable cross-zoning for this zone. Cross-zoning requires this zone to trip twice, or this zone and another cross-zoned zone to trip, within a programmed time before an alarm report is sent to the receiver.

Note: To operate correctly, all cross-zone zones need to be programmed as the same zone type.

When a cross-zoned zone trips, the Output action assigned to the zone activates. See the Bell Action section. The cross-zone time specified in System Options begins to count down. See the Cross-Zone Time section. If another cross-zoned zone in the system faults, or if the first zone restores and faults again before the cross-zone time expires, the bell turns on and the panel sends an alarm report.

If no other cross-zoned zone in the system trips before the cross-zone time expires, the panel sends only a fault report from the first zone to the receiver.

Note: If CRS ZONE is YES, a valid CRS ZN TIME must be programmed in System Options for this feature to be enabled.

Cross-zoning is not compatible and cannot be enabled for Fire Verify zone types.

33.16 PRIORITY **NO** YES

Priority

Selecting **YES** allows you to provide additional protection for a zone by requiring it to be in a normal condition before its assigned area can be armed. A priority zone cannot be bypassed.

A Priority zone not in a normal condition cannot be armed. If a user attempts to arm the area, the keypad displays the bad zone name followed by **PRIORITY ZONE** and the arming is stopped.

33.17 TRAFFIC COUNT **NO** YES

Traffic Count

This option is displayed for NT or EX type zones. Select **YES** to provide reporting to the receiver of the number of zone trips while in a disarmed state. The number of trips for each zone set as traffic count are added together and included with the area closing message and reported to the central station automation system. Default is NO.

33.18 ZONE AUDIT DAYS: **0 - 0**

Zone Audit Days

Enter the number of days (0 to 99) allowed to elapse without the zone being tripped before a fault message is sent. The message is sent to the receiver(s) programmed to receive Supervisory/Trouble Reports at 10:00 am following the expiration of the timer. Each time the zone is tripped, the Zone Audit Days timer restarts and begins to countdown the number of days programmed. After the countdown expires, a fault message is sent and the Zone Audit Days timer restarts and begins to countdown the number of days programmed. Available for all zone types except fire and fire verify. Enter 0 (zero) to disable this function. Default is 0 (zero).

33.19 RECEIVER ROUTING

Receiver Routing

This option displays if Zone Type is set for Auxiliary 1 or Auxiliary 2.

Press any top row key to select the Receiver Routing for the selected zone.

NORMAL

- Select NORM to send Alarm and Supv/Trbl messages from this zone to receiver 1 or receiver 2 as programmed within the receiver.

NORM 1 2 BOTH

- Select 1 to send Alarm and Supv/Trbl messages from this zone to receiver 1 only, regardless of the programming for that receiver.

- Select 2 to send Alarm and Supv/Trbl messages from this zone to receiver 2 only, regardless of the programming for that receiver.
- Select BOTH to send Alarm and Supv/Trbl messages from this zone to both receivers, regardless of the programming for either receiver.

33.20 ZONE NO: -
00

Zone Number

Enter the zone number you want to program next. Return to section 32.1 and follow the descriptions of each programming option. If all zones are programmed, press the ARROW key at the **ZONE NO: -** display to continue.

Stop

34.1 STOP

Stop

At the **STOP** option, pressing any select area allows you to exit the programmer function of the XTLplus panel. When selected, the panel performs an internal reset and exits the programmer. The Stop function causes the following conditions to occur:

- All 1100 Series DMP Wireless transmitters are reset to NORMALxx
- The panel's Status List is CLEARED

During the Stop function, all keypad displays are momentarily disabled for two seconds. Afterwards, the programming function is terminated and the keypads return to the Status List display.

Set Lockout Code

35.1 SET LOCKOUT CODE

Set Lockout Code

Pressing COMMAND at the Stop option displays **SET LOCKOUT CODE.** This feature allows you to program a special code that will then be required to gain access to the panel's internal Programmer through the keypad.

Changing the Lockout Code

You can change this code at any time to any combination of numbers from 1 to 5 digits long (1 to 65535). ***Do not use leading zeros for the lockout code***.

1. Press any select area. The display changes to **ENTER CODE: -**.
2. Enter a 1- to 5-digit code (do not enter a number higher than 65535). Press COMMAND.
3. Enter the new Lockout Code again. Press COMMAND. The keypad display changes to **CODE CHANGED**.

Once you have changed the code, it is important that you write it down and store it in a safe place. Lost lockout codes require the panel to be sent back into DMP for repair. You may cancel a Lockout Code by entering 00000 at the Set Lockout Code command option.

Lockout Code restriction

Do not set a Lockout Code higher than 65535.

Appendix

This section provides additional zone and system information.

36.1 Status List

The Status List is the current status of the system or records of recent system events that display on alphanumeric keypads. For example, in Home/Away systems you may see the display **SYSTEM READY**.

If an event were to occur on the system, such as an AC failure, the keypad would also display the **AC POWER -TRBL** message. This is a system event that is placed into the Status List to alert the user to a problem with the system.

Some Status List items remain in the display until manually cleared and some are cleared automatically when the condition returns to normal. Below is a list of status and event displays the keypad can show in the Status List:

Description	Must be manually cleared?
Fire and Supervisory zone alarms	Yes - by Sensor Reset
Fire and Supervisory zone troubles	No - clears when zone restores
Burglary zone alarms	No - clears at disarming.
All other zone alarms	No - clears when zone restores
Zone monitor displays	No - clears after approximately 8 minutes
Day zone alerts	No - clears after approximately 8 minutes
System monitor troubles (AC and battery trouble)	No - clears when condition restores
Armed status display (System On)	No
Disarmed status displays (System Ready, System Not Ready)	No
Remote keypad messages (Sent to the keypad by your office or central station)	No

The highest priority message is displayed on the keypad. When there are multiple items in the list, you can use the COMMAND or Back Arrow keys to scroll forward or back through the items.

36.2 Transmission Delay

You can set Abort Reports to **YES** if Opening and Closing reports are not being sent.

If the area where the alarm occurred is disarmed during the Transmit Delay time, only an Abort Report (S45) message is sent to the receiver. If the area where the alarm occurred is disarmed after the alarm message is sent to the receiver but before the Bell Cutoff time expires, even if the alarm was silenced, an Alarm Cancelled (S49) message is sent. The Alarm Cancelled report cannot be disabled.

36.3 False Alarm Reduction

System Recently Armed report

The System Recently Armed report (S78) is sent when a burglary zone goes into alarm within two minutes of the system being armed.

36.4 Diagnostics Function

The XTLplus panel contains a Diagnostics function that allows you to test the integrity of the network communication, integrity of the cellular communication and cellular signal communication of the 265C to the nearest tower for the cellular carrier. The Diagnostics function also displays the panel settings. To use Diagnostics, reset the panel, enter the Diagnostics code 2313 (DIAG), and press COMMAND.

MAC Address

Short for Media Access Control address. This hardware address uniquely identifies each network node. Not to be confused with an IP address, which is assignable. In the Diagnostics function, the MAC address is the panel on-board network hardware address. Press any select area to display the panel MAC address. Press the COMMAND key to view the next option.

Serial Number

This number is the network communicator serial number. Reference this number for communicator date-of-manufacture, hardware version, etc. Press any select area to display the Serial Number. Press the COMMAND key to view the next option.

Panel Settings

Pressing a select area displays the MAC Address, Serial Number, Frequency Offset, Panel Model, and Firmware Version.

MAC Address

The MAC address is the panel on-board network hardware address. Press any select area to display the panel MAC address.

Serial Number

This number is the panel serial number. Reference this number for date-of-manufacture, hardware version, etc. Press the COMMAND key to view the next option.

Frequency Offset

This menu option displays the frequency offset of the panel.

Panel Model

This menu option displays the panel model number.

Firmware Version

This menu option displays the Firmware Version number of the panel and date it was released.

Communication Status

This option tests the individual components of cellular or wireless network communication. The displayed results are shown below.

Cellular Results:

Successful Display	Failure Display
MODEM OPERATING	NO MODEM FOUND
IDENTIFIED	NO SIM CARD
TOWER DETECTED	NO TOWER
REGISTERED	NOT REGISTERED

SIGNAL: ▌▌▌▌▌▌▌
CONTINUE? NO YES

This displays the cellular signal strength of the nearest tower for the SIM card carrier. The ▌'s represent the signal strength 0-7. Select YES to continue through the remaining component tests. Select NO to stop testing and return to the COMM STATUS option.

Successful Display	Failure Display
CONNECTED	CONNECT ERROR
	NOT ACTIVATED
COMM PATH GOOD	NO ACK RECEIVED

Wireless Results:

Successful Display	Failure Display
LINK OK	LINK ERROR
DHCP OK	DHCP ERROR
GATEWAY FOUND	NO GATEWAY
DEST FOUND	NO DESTINATION
COMM PATH GOOD	NOT CONNECTED NO ACK RECEIVED

Cellular Signal Strength (CELL SIGNAL)

-XX dBm
SIGNAL: ▌▌▌▌▌▌▌

This option provides a way to test the cellular signal strength of the nearest tower for the cellular carrier. Press any select area to display cell signal strength. The X's represent the numerical value of the cell signal strength in -dBm. The ▌'s represent the signal strength 0-7.

Cell Roaming Indicator

ROAM -XX dBm
SIGNAL: ▌▌▌▌▌▌▌

The Cellular Signal Strength option in the panel's Diagnostic menu contains a roaming indicator. When the 265C Cellular Communicator is roaming or not in contact with a Verizon owned tower, ROAM will be displayed on the top line of the keypad along with the signal strength. To perform the cellular activation process from a keypad, the 265C MUST be in contact with a Verizon owned tower. If the cellular communicator is in contact with a tower owned by another network, ROAM and the signal strength displays, but activation cannot be completed. This feature can be used as a diagnostic tool to troubleshoot activation issues.

Activate Cell

Note: If the 265C Cellular Communicator has not been previously activated, Automatic Cellular Activation is performed when the panel powers up or is reset. **Activate Cell** (discussed below) is only necessary when Automatic Cellular Activation is not successful and communication was not established.

To begin the cellular activation for a 265C CDMA Cellular Communicator, verify that the 265C MEID has been added for the panel using Remote Link or by calling Customer Service (1-800-641-4282). At the keypad, press any select area when **ACTIVATE CELL** is displayed on the keypad. When the **SURE NO YES?** confirmation menu appears press the select area beneath YES to complete the cellular activation.

Successful Display	Failure Display
CELL ACTIVATED	NOT ACTIVATED

Wi-Fi Signal Strength (Wi-Fi SIGNAL)

```
SIGNAL ▌▌▌▌▌▌▌
HOMENET123
```

This option tests the signal strength of the selected SSID. Press any select area to display Wi-Fi signal strength. The ▌'s represent the signal strength 0-7.

Wi-Fi Signal Strength	
Number of Bars	**Indication**
7	**Good Signal** (Excellent for consistent operation)
6	
5	
4	**Average Signal** (Expect consistent operation)
3	
2	
1	**Weak Signal** (Will not operate reliably. Relocate Wi-Fi equipment or add a Wi-Fi extender for better reception.)
0	**No Signal**

Z-Wave Test Option

```
TEST ZWAVE
```

```
DEVICE LIST:
HALLWAY LIGHT
```

```
HALLWAY LIGHT
LIGHT 02        0/0
```

```
HALLWAY LIGHT
99/99   SUCCESSFUL
```

This feature allows the installer to test XTLplus communication with Z-Wave devices. A successful test indicates a response from a device. Press any select area to view the Z-Wave Device List.

Press COMMAND to advance through each Z-Wave device and press any select area to begin the test on the device displayed.

The name of the device displays above the device number. The current number of successful communications followed by the total number of attempts displays to the right of the device number. The test stops after 99 attempts.

Press COMMAND to view the final number of successful communications.

Exiting the Diagnostics program

Press the COMMAND key until **STOP** displays. Press any select area. The keypad returns to the Status List display.

36.5 Using the Walk Test

The XTLplus panel provides a walk test feature that allows a single technician to test all the protection devices connected to zones on the system. Conduct the Walk Test within 30 minutes of resetting the panel. The Walk Test automatically ends if no zones are tripped for 20 minutes. **TEST IN PROGRESS** displays at all keypads. When five minutes remain, **TEST END WARNING** displays. If any areas are armed the Walk Test does not start and **SYSTEM ARMED** displays.

```
WALK TEST
```

```
STD  WLS  PIR
```

Walk Test

To conduct the Walk Test, reset the control panel by pressing the RESET button then wait one minute. From the keypad, enter the code 8144. The keypad displays **WALK TEST**.

WLS (Wireless Check-in Test) - Select **WLS** to automatically test 1100 Series wireless transmitter communications. Includes all wireless devices except key fobs and transmitters programmed for a supervision time of 0 (zero).

PIR (Wireless PIR Walk Test) - The PIR Walk Test allows the installer to verify the 1126 and 1127 operation. When enabled, the 1126 LED flashes each time motion is detected for up to 30 minutes. This is a local test only and no messages are sent to the Central Station.

```
WALK TEST
```

```
TRIPS: XXX        END
```

Trip Counter For DMP Wireless Check-in Test (WLS)

Displays the number of wireless zones that automatically communicate a supervisory check-in message.

- The number of zones that check in. (XXX in the example).

- The total number of wireless zones programmed for supervision that should check in. (ZZ in the example).

END - Select END to stop the Wireless Check-in Test. When the test ends or a 20-minute time-out expires, normal wireless zone processing returns. If all transmitters check-in, both numbers will match within three (3) minutes. If a transmitter has multiple zones (1101, 1114, etc.), all zones will be included in the counts. Failed wireless zones then display on the keypad.

TEST END WARNING

Test End Warning

When no zones have been tripped and five minutes remain on the 20 minute Walk Test timer, the keypad displays **TEST END WARNING** and the keypad tones. If no additional test zone trips occur, the test ends and a final Sensor Reset automatically occurs. The System Test End message is sent to the receiver along with Verify and Fail messages for each zone under WALK test. Faulted zones then display on the keypad.

SOUTH LOBBY
ZONE: 10 -FAIL

Failed Zones Display

Each zone that did not trip at least once during the Walk Test displays on the keypad that initiated the test. Any Fire (FI) Panic (PN) or Supervisory (SV) 24-hour zone that is faulted at the end of the Walk Test displays a trouble condition for that zone regardless of the message programmed for the open or short condition of the zone and a zone trouble is sent to the receiver. Press the COMMAND key to display the next failed zone.

For the Wireless Check-in Test, failed wireless zones display only on the keypad. Zone Verify/Fail reports are not sent to the central station receiver for the wireless checkin test.

36.6 Keypad Speaker Operation

When using LCD Keypads, the panel provides distinct speaker tones from the keypad for Fire, Burglary, Zone Monitor, and Prewarn events. The list below details the conditions under which the speaker is turned on and off for each event.

Fire	On - Fire zone alarm and Bell Output are ON. Off - Alarm Silence or briefly when a key is pressed.
Burglary	**On** - Burglary zone alarm and Bell Output and is ON. **Off** - Alarm Silence or briefly when a key is pressed.
Zone Monitor	**On** - One time only when a monitored zone is tripped. **Off** - After one tone.
Prewarn	**On** - During Entry Delay. **Off** - When Entry Delay expires, when a Valid Code is entered, or when a key is pressed.

36.7 Cross Zoning

Caution must be taken when cross zoning devices to ensure that the Cross Zone Time is long enough to allow an intruder to trip both devices before it expires. A Cross Zone Time that is too short may allow an intruder to trip the devices and allow only a zone fault report be sent to the central station.

When a Cross Zoned zone trips, a FAULT report is sent to the SCS-1R Receiver. When two Cross Zoned zones trip within the Cross Zone Time, both zones send ALARM signals to the receiver. For example, if zones 1 and 2 are Cross Zoned zones, and only zone 1 trips, a FAULT report is sent to the receiver for zone 1. If zone 1 trips and zone 2 trips within the Cross Zone Time, an ALARM report is sent to the receiver for zone 1 and zone 2.

Note: To operate correctly, all cross-zone zones need to be programmed as the same zone type.

36.8 Zone Type Descriptions

This section describes applications for the default zone types in Zone Information programming.

NT (Night Zone) - Controlled instant zone used for perimeter doors and windows and interior devices such as PIRs and glassbreak detectors.

DY (Day zone) - Used for emergency doors or fire doors to sound the keypad buzzer and display the zone name when the zone is faulted. Day zones also will send alarm reports to the receiver during the system's armed periods.

EX (Exit zone) - Initiates the entry delay timer when its assigned area is fully armed. Also, can initiate an exit delay timer to allow a user to exit an area after the arming process has started.

PN (Panic zone) - Used for connecting to mechanical devices that allow a user to signal an emergency alarm. Panic zones can provide either a silent or audible alarm with or without reporting to a central station receiver.

EM (Emergency zone) - These are used for reporting medical or other non-panic emergencies to the central station.

SV (Supervisory zone) - Used to provide 24-hour zone supervision. Typical applications are high water, and low and high temperature gauges.

FI (Fire zone) - Used for any type of powered or mechanical fire detection device. Typical applications are for smoke detectors, sprinkler flow switches, manual pull stations, and beam detectors.

FV (Fire Verify zone) - Used primarily for smoke detector circuits to verify the existence of an actual fire condition. When a Fire Verify zone initiates an alarm, the panel performs a Fire Reset. If any Fire zone initiates an alarm within 120 seconds after the reset, an alarm is indicated. If an alarm is initiated after 120 seconds, the cycle is repeated.

A1 and **A2** (Auxiliary 1 and Auxiliary 2) - These zones are similar to a Night zone and are typically used to protect restricted areas within a protected premises. Auxiliary 2 zones do not appear in the Status List.

AR (Arming zone) - Allows you to connect a keyswitch to a zone and use it to arm and disarm the system.

XTLplus Zone Information

Assign Area and Disarmed condition for NT, DY, EX, A1, and A2 only.
Assign Prewarn and Entry Delay for EX only.
Assign Style for AR only.
Assign 31 to 34 or 41 to 44 to Key Fobs.
Wireless output modules can be assigned to 31 to 34 and 41 to 44.
Supervision Time of 3 minutes can only be used with Zone Types FI, FV and SV.

Zone Type Defaults

Zone #	Key Fob	Type	Area	DMP Wireless										Disarmed Open			Disarmed Short			Armed Open			Armed Short			Swinger	Prewarn	Entry Delay	Cross Zone	Priority	Traffic Count	Zone Audit Days	Receiver Routing	Style
	N or Y	NT EX PN SV A2 AR DY FI EM A1 FV	INT BDRM PERIM or 1 to 6	Contact INT or EXT	External Contact N/O? N or Y	1114 Contact 1 2 3 4	Supervision Time 0 3 60 240	LED Operation N or Y	Disarm-Disable N or Y	PIR Pulse Count 2 or 4	Sensitivity Low or High	Message A T L -	Output *	Action S P M F	Message A T L -	Output *	Action S P M F	Message A T L -	Output *	Action S P M F	Message A T L -	Output *	Action S P M F	Swinger N or Y	1 or 2	1 or 2	Cross Zone N or Y	Priority N or Y	Traffic Count N or Y	Zone Audit Days 0 to 99	NORM 1 2 BOTH	TGL ARM DIS STEP MNT
NIGHT	N	NT		INT	N	1	240	Y	Y	4	Low	-	0	S	-	0	S	A	0	S	A	0	S	Y			N	N	N	0		
DAY	N	DY		INT	N	1	240	Y		4	Low	T	0	S	T	0	S	A	0	S	A	0	S	Y			N	N	N	0		
EXIT	N	EX		INT	N	1	240	Y	Y	4	Low	-	0	S	-	0	S	A	0	S	A	0	S	Y	1-5	1	N	N	N			
FIRE	N	FI		INT	N	1	240	Y		4	Low							T	0	S	A	0	S	N			N					
PANIC	N	PN		INT	N	1	240	Y		4	Low							T	0	S	A	0	S	N			N	N		0		
EMERGENCY	N	EM		INT	N	1	240	Y		4	Low							T	0	S	A	0	S	N			N	N		0		
SUPERVISORY	N	SV		INT	N	1	240	Y		4	Low							T	0	S	A	0	S	N			N	N		0		
AUXILIARY 1	N	A1		INT	N	1	240	Y		4	Low	T	0	S	A	0	S	T	0	S	A	0	S	N			N	N		0	NORM	
AUXILIARY 2	N	A2		INT	N	1	240	Y		4	Low	T	0	S	A	0	S	T	0	S	A	0	S	N			N	N		0	NORM	
FIRE VERIFY	N	FV		INT	N	1	240	Y		4	Low							T	0	S	A	0	S	N				N				
ARMING	N	AR		INT	N	1	240	Y		4	Low																					0		TGL
Zone #	Key Fob	Type	Area	Contact	External Contact N/O?	1114 Contact	Supervision Time	LED Operation	Disarm-Disable	PIR Pulse Count	Sensitivity	Disarmed Open Message	Disarmed Open Output *	Disarmed Open Action	Disarmed Short Message	Disarmed Short Output *	Disarmed Short Action	Armed Open Message	Armed Open Output *	Armed Open Action	Armed Short Message	Armed Short Output *	Armed Short Action	Swinger	Prewarn	Entry Delay	Cross Zone	Priority	Traffic Count	Zone Audit Days	Receiver Routing	Style
Zone Name																																		
Serial Number																																		

* Outputs = 31 to 34, 41 to 44, or F1-F20.

= This function not available for this zone type.

36.9 Zone Type Defaults

The XTLplus panel contains 11 default zone types that provide the most commonly selected functions for their applications. All zone types can be customized by changing the variable options listed below.

Key Fob - Indicates if a DMP key fob is programmed.

Type - These are the abbreviations displayed on the keypad for the zone types.

Area - For a ALL/PERIM or HOME/SLEEP/AWAY system, this is either Interior, Bedroom, or Perimeter. For an AREA system use 1 to 6.

Wireless - 1100 Series Wireless options.

Contact - Indicates if the Universal Transmitter is programmed to use the internal or external contact.

External Contact N/O? - Identifies whether externally installed contacts are programmed as a normally open (N/O) or normally closed (N/C) circuit. Y = N/O Contacts. N = N/C Contacts.

1114 Contact - Indicates if the 1114 Zone Expander is programmed for contact(s) 1, 2, 3, or 4.

Supervision Time - Selects the number of minutes for DMP wireless supervision.

1142 LED Operation - Identifies DMP 1142 Wireless Two-Button transmitter LED operation.

Disarm/Disable - Disables Zone Tripped messages from 1101, 1102, 1103, and 1106 Transmitters, as well as 1126/1127 PIRs while disarmed.

PIR Pulse Count - Selects the number of pulse counts the 1126/1127 uses before sending a short message.

Sensitivity - Sets sensitivity for the 1126/1127 PIR.

Message - A = alarm report, T = trouble report, L = local with no report, — (dash) = no report.

Output - 51 to 54 and 61 to 64 wireless outputs or wireless key fob zones.

Action - This selects the type of relay output: S = steady, P = pulse, M = momentary, and F = follow

Swinger Bypass - The zone can be automatically bypassed after a programmed number of trips.

Prewarn - This selects the keypad address that sounds the entry prewarn for this zone.

Entry Delay - Selects the entry delay timer used for this zone.

Priority - Requires this zone to be in a normal condition before the area can be armed.

Traffic Count - Provides the number of zone trips per area for Night and Exit type zones in a disarmed state.

Zone Audit Days - Number of days allowed to elapse without a zone being tripped before a message is sent.

Receiver Routing - This selects the routing option for Auxiliary 1 or Auxiliary 2 zone types.

Style - The abbreviations that display on the keypad for arming zone style. TGL = Toggle,

ARM = Arm only, DIS = Disarm only

STEP = Wireless arming, MNT = Maintain

36.10 Common Keypad Messages

Message	Meaning	Possible Solutions
INVALID CODE	The user code you have entered is not recognized by the system.	Check the user code and try again.
CLOSING TIME	The schedule has expired but the system has not been armed.	Users still on the premise should arm the system or extend the schedule to a later time.
KEYPAD NAME - NOPWR	Wireless keypad is not getting proper power.	Check that AC/DC transformer is plugged in correctly.
AC TROUBLE	The system AC is low or missing.	Check that the AC connections are good.
BATTERY TROUBLE	The System battery is either low or missing.	Check that the battery connections are good and the battery is still good.
SYSTEM TROUBLE or SERVICE REQUIRED	There is a problem with one or more components in the system.	Press the RESET button for 1-2 seconds.
SYSTEM BUSY	The system is performing another task with a higher priority.	Wait a few moments for the system to complete the task. If the message displays for a long period of time, the processor could be locked up.
TRANSMIT FAIL	The panel has attempted to communicate with the central station 10 times and has not succeeded.	Verify your communication type, account number, and IP address.
ENTER CODE (When entering Programming)	A lockout code has been programmed for the panel.	Enter the lockout code.

Listed Compliance Specifications

37.1 Introduction

The programming and installation specifications contained in this section must be completed when installing the XTLplus in accordance with any of the ANSI/UL or SIA burglary standards. Additional specifications may be required by a particular standard.

37.2 Use Marking

Commercial Central Station, Household Burglar Control Unit.

37.2 Locations and Wiring

Locations and wiring methods shall be in accordance with the National Electrical Code, ANSI/NFPA 70 and the Standard for Installation and Classification of Burglar and Holdup Alarm Systems, UL 681.

37.3 NFPA 72

This equipment should be installed in accordance with Chapter 29 of the National Fire Alarm Code, ANSI/NFPA 72, (National Fire Protection Association, Batterymarch Park, Quincy, MA 02269). Printed information describing proper installation, operation, testing, maintenance, evacuation planning, and repair service is to be provided with this equipment. Warning: Owner's instruction notice, not to be removed by anyone except occupant.

37.4 Types Of Service

Suitable for Central Station Burglar. Suitable for Household Fire and Household Burglar. Test weekly. The XTLplus has not been evaluated by Intertek for Household Fire.

37.5 Police Station Phone Numbers

The XTLplus must not be programmed to communicate with a police station.

37.6 Bypass Reports

The bypass reports must be programmed as YES for all listed burglary applications.

37.7 System Testing

The system must be tested once per week and Checked by a qualified technician once every three (3) years.

37.8 FCC Notice

This device complies with Part 15 of the FCC Rules. Operation is subject to the following two conditions: (1) This device may not cause harmful interference, and (2) this device must accept any interference received, including interference that may cause undesired operation.
This equipment complies with the FCC RF radiation exposure limits set forth for an uncontrolled environment. This equipment should be installed and operated with a minimum distance of 20cm between the radiator and any part of your body.
This device must not be collocated or operating in conjunction with any other antenna or transmitter.

Household Burglar-Alarm System Units

ANSI/UL 1023

38.1 Bell Cutoff

The bell cutoff time cannot be less than 4 minutes.

38.2 Entry Delay

The maximum entry delay used must not be more than 45 seconds.

38.3 Exit Delay

The maximum exit delay used must not be more than 60 seconds.

38.4 Wireless External Contact

When used, the External Contact of 1101, 1102, or 1106 transmitters must be programmed Normally Closed.

38.5 Wireless Supervision Time

The Zone Information Supervision Time cannot be set to 0 (zero).

38.6 Wireless Audible Annunciation

The Wireless Audible option must be selected as DAY for residential applications.

38.7 Panel location

Mount panel inside protected area.

38.8 Test Frequency

The Test Frequency option must be programmed to send a report at least once every 30 days.

Central Station Burglar Alarm Units

ANSI/UL 1610

39.1 Supervision

Commercial Burglary is provided when the Check-in and Fail Time time is set to 3 minutes.

39.2 Remote Disarm

REMOTE DISARM must be programmed as NO.

39.3 Central Station

MESSAGE TO TRANSMIT programming for zones must not be set to LOCAL (L).

Household Fire Warning System

ANSI/UL 985 NFPA 72 Specifications

40.1 Bell Output Definition

The bell output of the Model XTLplus must be programmed to operate steady on burglary alarms and temporal on fire alarms.

40.2 Household System

An alarm sounding device must be installed indoors so that it is clearly heard in all sleeping areas.

40.3 Wireless Supervision Time

The Zone Information Supervision Time must be 3 minutes for fire devices.

40.4 Wireless Fire Verification

When used, the Model 1161 and 1162 wireless smoke detectors must not be programmed as Fire Verification (FV) zone type.

40.5 Battery Standby

For listed applications, the panel must have 24 Hour battery standby operation. The Model XTL+BAT3500 battery should be used for fire installations.

40.6 Test Frequency

The Test Frequency option must be programmed to send a report at least once every 30 days.

False Alarm Reduction Programmable Options ANSI/SIA CP-01-2010

41.1 Shipping Defaults and Recommended Programming

SIA CP-01 FEATURE PARAGRAPH # AND DESCRIPTION	DMP PROGRAMMING GUIDE LT-1434 SECTION #	REQUIREMENT	RANGE	SHIPPING DEFAULT	RECOMMENDED PROGRAMMING*
4.2.2.1 Exit Time	28.6 Exit Delay	Required (Programmable)	45 sec. - 250 sec.	60 Seconds	60 Seconds
4.2.2.2 Progress Annunciation	33.14 Prewarn Address	Allowed	Individual keypads may be disabled per zone	All keypads enabled	All keypads enabled
4.2.2.3 Exit Time Restart	28.6 Exit Delay	Required Option	For re-entry during exit time	Enabled	Enabled
4.2.2.5 Auto Stay Arm on Unvacated Premises	28.17 Occupied Premise - See Install Guide	Required Option (except for remote arming)	Occupied Premise NO/ YES option	Enabled	Enabled Yes for Residential Applications
4.2.4.4 Exit Time and Progress Annunciation/ Disable - for Remote Arm	Not Available on Remote Arming	Allowed Option	Progress Annunciation Always disabled for Remote Arming	Not Available	Remote Arming not allowed for CP-01 installations.
4.2.3.1 Entry Delay(s)	28.5 Entry Delay	Required (Programmable) Only use Entry Delay 1. Do not use Entry Delay 2.	30 sec. – 240 Sec. **	30 Seconds	At least 30 Seconds **
4.2.5.1 Abort Window – for Non-Fire Zones	36.2 Transmit Delay	Required Option	Disable by zone or zone type	Enabled NT DY EX Zone	Enabled
4.2.5.1 Abort Window Time – for Non-Fire Zones	36.2 Transmit Delay	Required (Programmable)	20 sec., 30 sec., or 40 sec. **	30 Seconds	At least 20 Seconds **
4.2.5.1.2 Abort Annunciation	36.2 Transmit Delay	Required Option	Annunciate that no alarm was transmitted	Yes	Yes
4.2.5.4.1 Cancel Annunciation	Always Enabled - Not Programmable	Required Option	Annunciate that a Cancel was transmitted (S49)	Always Enabled	Yes
4.2.6.1 & 4.2.6.2 Duress Feature	User Code + 1 = Ambush Code Not Available	Allowed Option	No 1 + derivative of another user code/no duplicates with other user codes	Code +1 Always Disabled	Not Programmable
4.3.1 Cross Zoning	33.16 Cross Zone	Required Option	Yes/No Zone Programming	No	Enabled using two or more programmed zones
4.3.1 Programmable Cross Zoning Time	28.7 Cross Zone Time	Allowed	4 sec. - 250 sec.	0 Seconds	Per walk path in protected premises
4.3.2 Swinger Shutdown	Not Available — Always On	Required	1-6 trips	2 trips	2 trips
4.3.2 Swinger Shutdown Disable	33.13 Swinger Bypass	Allowed	For non-police response zones	Yes	Enabled (all zones)
4.3.3 Fire Alarm Verification	33.5 Zone Type	Required Option	FV Type Zone	No	Yes as required (unless sensors can self verify)
4.6.3 System Test	36.5 Walk Test	Allowed	Test all protection devices	N/A	N/A
4.6.5 Communications	36.5 Walk Test	Not Allowed	N/A	N/A	N/A

* Programming at installation may be subordinate to other listed requirements for the intended application.
** For listed Installations, combined Entry Delay and Transmit Delay should not exceed 1 minute.

Local Bell
All non-fire zones such as Night, Day, Exit, Aux 1 and Aux 2 must be programmed for local bell enabled with a bell cutoff time set to a minimum of 6 minutes to provide a cancel window of 5 minutes or greater. This does not apply to manually operated zone types such as Panic and Emergency.
The requirements are superseded by any requirements for Commercial Burglar, Household Fire Warning, or Household Burglar applications.

Minimum Installation Requirements: SIA CP-01-2010 minimum system installation requirements include an XTLplus, an 1135 Wireless Siren, a 9000 Series Wireless keypad, and communication to an SCS-1R receiver.

Z-Wave Certification Information

Removing or Replacing Failed Devices

If a device fails, users can remove or replace the device through the User Menu.

1. Press **CMD** until **MENU? YES NO** appears, then press **YES**.
2. After accessing the User Menu, press **CMD** until **ZWAVE SETUP?** appears. Press any select key/area.
3. Select **LIST** and press **CMD** until the device you are removing or replacing displays. Then, press any select key/area to select the device.
4. Select **STATUS**. The status of the device displays as either **OKAY** or **FAILED**. If the device fails, **REMOVE FAILED DEVICE** displays.
5. Select **YES** to remove the device. Press the second select key/area to replace the device.
6. If you chose to replace the device, **PROCESSING** displays.
7. When prompted, press the button (or series of buttons if adding a thermostat) on the replacement device.
8. The keypad displays that the device has connected to your system.

   Note: The replacement device keeps the orinigal device's name.

Z-Wave Terminology

Primary Controller: This is the main device used to set up and control your Z-Wave network. There can only be one primary controller and it can be used to add or delete devices. A primary controller can be a portable device like a hand-held remote, a static controller (permanently installed & never moved), a Z-Wave enabled PC or a Z-Wave enabled Ethernet router/bridge.

Secondary Controller: The Z-Wave network supports multiple controllers so that additional Z-Wave remote controllers can be used throughout the home. If the secondary controller is the same brand and model as the primary, it will have all the same capabilities as the primary.

Home Control Network: The controllers and every Z-Wave device added with the primary controller are linked together into a wireless network. Each device in the network has a unique address assigned to it and cannot be activated by a neighbor's Z-Wave controller.

Light/Node/Device: Node is the technical term used to describe a Z-Wave device in a home control network. Please note that the terms "Node," "Device," and "Light" all refer to an individual Z-Wave enabled device and are interchangeable within the context of these instructions.

Z-Wave Certification

- The XTLplus is a Z-Wave Security enabled device.
- The XTLplus can be added to an existing network as a secondary controller using the Learn (LRN) process.
- The XTLplus is compatible with Z-Wave devices from all manufacturers.
- The XTLplus can perform a Factory Default Reset by initializing defaults in the panel programming menu.
- The XTLplus only supports group one with a maximum of one node.
- The XTLplus takes no action when a basic set command is received.

Revisions to This Document

This section explains the changes made to this document during this revision. It lists the date and identifies the change(s) made, the related section number and section heading, and a summary of the change.

Ver.	Section Number and Heading	Quick Explanation of Changes
1.01	Entire Document	Initial Release
1.02	6.1, 6.2, Certifications	3500mAh Battery, ANSI/UL 985 Household Fire Listing

Certifications

FCC Wireless Receiver AND Z-Wave Approvals
FCC ID: CCKPC0181
IC: 5251A-PC0181

FCC Wi-Fi Network Approvals
FCC ID: VW4-ATWINC1500

ANSI/UL 1023 Household Burglar

ANSI/UL 1610 Central Station Burglar

ANSI/UL 1635 Digital Burglar

ANSI/UL 985 Household Fire

Ordering Information

XTL+W	900MHz with Wi-Fi
XTL+Z	900MHz with Z-Wave
XTL+WZ	900MHz with Wi-Fi and Z-Wave

Accessories

265C	CDMA Cellular Communicator
372-500-W	12VDC Nominal Power Supply (ST-12500W)
XTL+BAT800/8	3.8VDC Nominal Lithium, 800mAh Battery
XTL+BAT3500/8	3.8VDC Nominal Lithium, 3500mAh Battery

800-641-4282
www.dmp.com
Designed, Engineered and Manufactured in Springfield, Missouri

INTRUSION • FIRE • ACCESS • NETWORKS
2500 North Partnership Boulevard
Springfield, Missouri 65803-8877

LT-1434 1.02 © 2017 Digital Monitoring Products, Inc. 17413