User manual for awning blind AMZ Solar

Contents

1. Safety standards 2
2. Description 3
3. Programming the appliance....4
4. Association Groups....5
5. Compatibility of other producers' appliances in Z-Wave. 5
6. Z-Wave configuration parameters....5
7. Alarms and Notifications....6
8. Technical parameters....6
9. Command classes....6
10. Manufacturer Specific Report....7
11. Description of signals - light-emitting diode (LED)....7
12. Warranty....8

FAKRO Sp. z o.o.
ul. Węgierska 144A
33-300 Nowy Sącz
Polska
www.fakro.com
tel. +48 18 444 0 444
fax. +48 18 444 0 333

 ©2018, FAKRO

1. Safety standards

Please carefully read the instructions below before installing the awning to avoid electric shocks, laceration, etc.

While installing the electric awning blind it is essential to comply with the following rules:

- Firstly, after unpacking, check that the awning blind does not show any signs of mechanical damage.
- Installation should be performed by a qualified person according to the producer's user manual.
- Before connecting the awning blind, make sure that the supporting voltage is compatible with the voltage of the awning blind mentioned on the rated plate.
- Plastic containers used for packing should be kept out of children's reach as they pose a potential threat.
- The awning blind should be used only for its purpose. FAKRO is not responsible for any damage of the awning blind resulting from improper use.
- Any actions related to cleaning, adjusting or disassembling of the electric awning should be preceded by disconnecting the power supply.
- Do not use any solvent-like agents, or a water jet (do not dip in water).
- All repairs should be made by a service authorized by the producer.
- The awning blind is for external use only.

 ©2018, FAKRO

2. Description

AMZ Solar awning blinds are only for external installation with Fakro roof windows. They are compatible with Fakro wireless remote controls or other remote controls marked with the Z-Wave logo produced by other companies. Awning blinds are equipped with a two-way module of radio communication. Z-Wave uses 919,8MHz radio waves.
The AMZ Solar awning blind has three extremes:

- maximum extension (encoder maximum position)
- completely rolled up (encoder minimum position)
- current limiting protecting awning blind against damage and user against accidental injury resulting from the contact with moving elements of awning blind.

In order to use the appliance, it is essential to install it in accordance with the figure manual attached to its package. Programming should be done with any of the remote controls available from Fakro or any remote controls equipped with the Z-Wave logo produced by other companies. *Figure 1* shows a general view of the AMZ Solar awning blind with a description of the buttons and indicators. In the AMZ Solar awning blind the controlling module is located under the right-side body cover - see *Figure 1*.

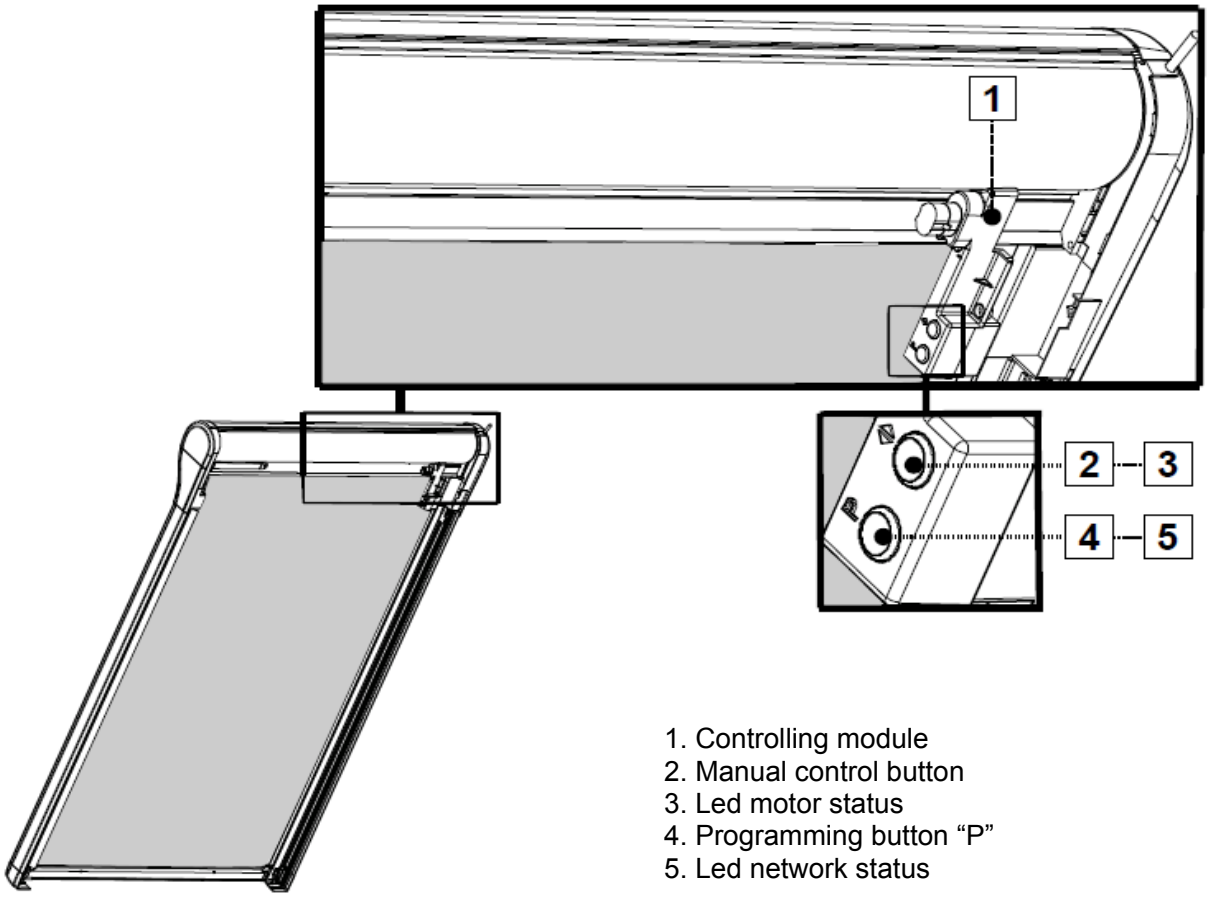

Figure 1: AMZ Solar awning blind button description.

3. Programming the appliance.

In order for the appliance to communicate with the Z-Wave network, it is essential to connect to the network and give the appliance a special number (Node ID). The appliance can be added to a network, as long as it does not belong to another one. In order to add the appliance to a network, it should firstly be deleted from any network it belongs to, or restored to factory settings. This can be done with the use of any primary controller. The network status diode indicates when the appliance is ready to be linked to the network. This diode does not belong to any network.

In some cases (changing the location of an installation, or changing a damaged appliance), it is necessary to delete the appliance from the controllers' memory, as well as from the network in order to avoid errors and save the batteries of portable controllers.

Do not physically remove the appliance until it has been deleted from the controller's memory. Improper usage can cause delays when trying to use the appliance and will cause the batteries of portable controllers to run out quickly.

Function	Description		Led indication	
			Motor operating status	Z-Wave operating status
Autoinclusion & Include (Add a new node)	**Autoinclusion** - This feature allow you to add hard to reach devices to Z-Wave network. 3-times ON and OFF the power awning blind (OFF-ON-OFF-ON-OFF-ON) causes the introduction of awning blind to Autoinclusion mode. Please note that the procedure has been started the time between on and off can not exceed 20s. Autoinclusion mode is activated for a maximum of 10 minutes. During this time, we can add an awning to any Z-Wave controller running in the Include procedure.		-	flashing for up to 10 minutes
	Include - This function allow you to add awning blind to the network Z-Wave. Follow the procedur adding device to the network Z-Wave according to user manual supplied with the product. Then, press the programming button P on the awning blind for 1 second.		-	Before: Light ON After: Light OFF
Association (Add node to group)	**Associate** – function allow you to add awning blind to the group of controller. Follow the procedur adding device to the selected group according to user manual supplied with the product. Then, press the programming button P on the awning blind for the 1 second.		-	-
Exclude (Remove an existed node)	**Exclude** - This function allow you to remove awning blind from the network Z-Wave. Follow the procedur removing device from the network Z-Wave according to user manual supplied with the product. Then, press the programming button P on the awning blind for 1 second. Function removes information only about newtork Z-Wave.		-	light
Delete (Remove node from group)	**Delete** – function allow you to remove awning blind from the group of controller. Follow the procedur removing device from the selected group according to user manual supplied with the product. Then, press the programming button P on the awning blind for the 1 second.		-	-
Factory Default Reset	**Device Reset Locally** – This function allows you to reset the Z-Wave network without the use of Z-Wave controller. Press 5 times the programming button P fast, the awning blind was removed from the Z-Wave network, restore the default parameters, name and locations. Please use this procedure only when the network primary controller is missing or otherwise inoperable.		-	light
	Parameter Reset Locally – Press fast 3 times P button on the Awning Blind. Function removes information about parameters.		-	Flashing 5 times
Calibration	**Manual** - Factory end positions awning blind are calibrated. Calibration possible without necessity for prior recalibration of the device. It is performed using buttons available on the control panel of the AMZ Solar awning blind. Warning!!! For the proper calibration of the device requires two end positions set correctly.	1. Press P button and manual control button in the same time on the control panel.	Flashing...	-
		2. Press and hold manual control button until reach first end position.	Flashing...	-
		3. Press P button to confirm first end position.	Stop flashing and lit cointinously within 2 sec.	-
		4. Led motor status blinking again. Press and hold manual control button until reach second end position.	Flashing...	-
		5. Press P button to confirm second end position.	Stop blinking and lit cointinously within 2 sec.	-

 ©2018, FAKRO

	Remote – calibration possible after prior recalibration of the device. It is possible via gate (Gateway Z-Wave), remote control with a display, e.g. ZRS24 remote control (FAKRO).	1. Discalibrate device from controller – set parameter 12, value 2	Light	-
		2. Calibrate device from controller – set parameter 12, value 1	Flashing...	-
		3. Press UP button and hold it till reach first end position.	Flashing...	-
		4. Press STOP button to confirm first end position.	Stop flashing and lit cointinously within 2 sec.	-
		5. Press DOWN button and hold it till reach second end position.	Flashing...	-
		6. Press STOP button to confirm second end position.	Stop blinking and lit cointinously within 2 sec.	-

4. Association Groups.

There are four association groups in awning blind AMZ Solar:

1. Life Line – group for position reporting awning blind after each a stoppage and alarm reporting (overcurrent, damage encoders). This group can be a maximum 1 device.
2. Basic Repeat – group used to transfer the received basic commands to the devices included in this group. This group can be a maximum 5 devices.
3. Multilevel Repeat – group used to transfer the received multilevel commands to the devices included in this group. This group can be a maximum 5 devices.
4. Basic Control – group used to transfer the received commands from AMZ Solar (A, S mode) to the devices included in this group. This group can be a maximum 5 devices.

5. Compatibility of other producers' appliances in Z-Wave.

Z-Wave allows for the integration of other producers' appliances for lighting, heating, domestic automatic appliances, etc. The Z-Wave works in the network as a "repeater", which enlarges the range of radio communication. The more appliances in the network, the more resistant to disordered activities in the network.
This product can be operated in any Z-Wave network with other Z-Wave certified devices from other manufacturers. All non-battery operated nodes within the network will act as repeaters regardless of vendor to increase reliability of the network
Launch the "INCLUDE" procedure with a controller of the existing network, and then press the "Programming button" located on the awning blind which you want to link to the network.
Attention: All information concerning "Include" and "Associate" options in other producers' controllers can be found in their user manuals.

6. Z-Wave configuration parameters.

No.	Value	Default Value	Size	Description
1	0x00, 0x01, 0x02	0x00	1	00 – manual 01 – semi 02 – auto
2	0x01, 0x02	0x01	1	01 – summer 02 – winter
3	0x01...	0x03	1	time [min]

	0x30			
4	0x03... 0x100	0x60	1	sensitivity [%]
12	1 2	1	1	Value 1 – calibrated Value 2 – discalibrated – to enter the calibration mode must first time discalibrate and then calibrate.
13	1 2	1	1	1 – FF go to Max 2 – FF go to previous position

7. Alarms and Notifications.

Notyfication type	Event
Power Management	Over-load detected
System	System hardware failure (encoders damaged)

8. Technical parameters

Technical parameters	
Power voltage	12V DC
Rated current	1,4 A
Speed	23 r.p.m
Temperature of usage	(-10ºC) do (65ºC)
Supplying cable	2 x 0,75 mm^2

9. Command classes.

Command Classes	Role	
	Support	Control
Command Class Z-Wave+ Info v2	ok	
Command Class Basic v1	ok	ok
Command Class Version v2	ok	
Command Class Manufacturer Specific v2	ok	
Command Class Device Reset Locally v1	ok	
Command Class Association v2	ok	
Command Class Association Group Info v1	ok	
Command Class Powerlevel v1	ok	
Command Class Switch Binary v1	ok	
Command Class Switch Multilevel v3	ok	ok
Command Class Switch All v1	ok	
Commad Class Configuration v1	ok	
Command Class Notification v3	ok	
Command Class Node Naming v1	ok	
Battery v1	ok	

 ©2018, FAKRO

10. Manufacturer Specific Report.

Manufacturer Specific Report	
Parameter	Value
Manufacturer ID	0x0085
Product Type ID	0x0005
Product ID	0x0012

11. Description of signals - light-emitting diode (LED)

Motor operating status (see figure no.1)		**Z-Wave operating status (see figure no.1)**	
Singular blink of the diode	The current received from the motor is too low.	**Continuous lighting of the diode**	The appliance does not belong to any network - remove control is impossible. This diode always appears when the appliance is connecting to a new motor. It disappears when the appliance is linked to any network using “INCLUDE” function.
Triple blink of the diode	The current received from the motor is too intensive. A calibration of the awning blind motor should be checked. A description of outskirts regulation is described in point A of the awning blind installation.		

 ©2018, FAKRO

12. Warranty

The producer guaranties a high quality of the appliance. It pledges to repair or replace damage element, if the damage is caused by defective materials or construction. The warranty is valid within 24 months from the date of selling due to the following conditions:

- The installation process was proceeded by qualified and authorized person according to the producer requirements.
- The seals were not affected and there were not introduced any changes in construction.
- The appliance was used according to its purpose and in comply with user manual.
- Damage is not an effect of improper power supply installation or an atmospheric conditions.
- The producer is not responsible for any damages arising of improper using and for mechanic damages.

In case of a damage the appliance should be delivered along with the Warranty Card. During the warranty period all damages and defections are recovered for free within 15 labour-days. Warranty and after-warranty repairs are made by the producer FAKRO Ltd.

Quality certificate:

Appliance

Model.....

Serial Number.....

Saleperson.....

Address.....

Date of purchase.....

.....

Signature (stamp) of installing person

 ©2018, FAKRO