Installing the

FOREST SHUTTLE® S/M/L Z-Wave

FOREST
DRAPERY HARDWARE

Installing the **FOREST SHUTTLE® S / M / L Z-Wave**

① Assemble the track

② Install the brackets and fix the track onto the brackets

③ Do not attach the drapery yet. Attach the drapery only after the end positions have been set.
→ position the master carrier(s) into half open position

④ Attach the motor to the track

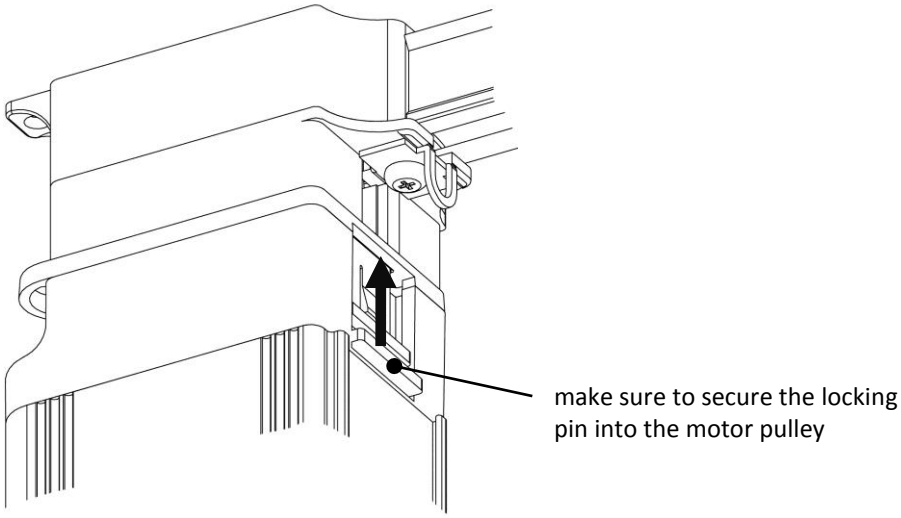

⑤

Shuttle® L Z-Wave:

Connect the AC plug (100-240V~) to the power socket of Shuttle L

Shuttle® S / M Z-Wave (USA):

Connect the 24V plug into the socket of the Shuttle S and connect the AC plug to the wall socket.

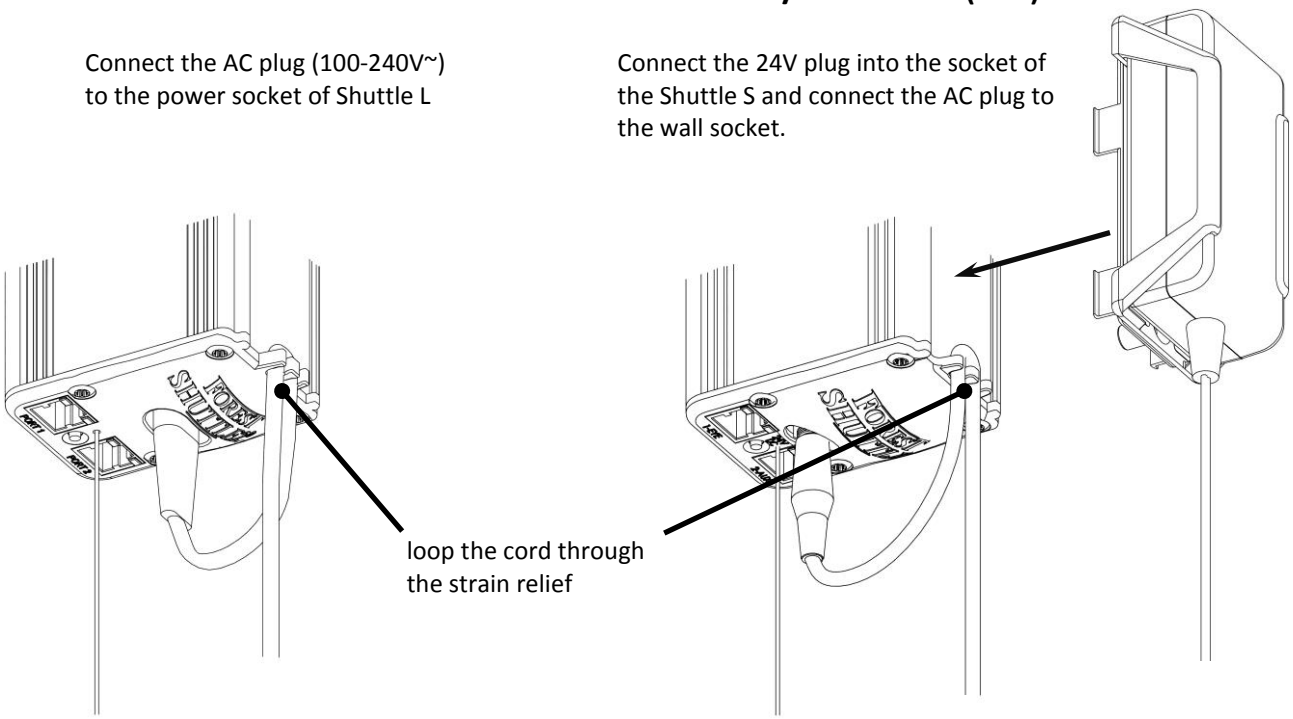

⑥ *Setting the end limits of the* **FOREST SHUTTLE® S / M / L Z-Wave**

Before setting the end limits, the RF remote or IR remote channel can be programmed. The stack back (adjusted open limit) can be set by remote or switch. For programming see page 4.

SETTING MOTOR DIRECTION AND CLOSE LIMIT:

The Shuttle Z-Wave detects automatically the motor direction. By pulling the master carrier(s) towards closed position first, the Shuttle will automatically learn that motor direction. The master carrier will travel automatically towards the closed position.

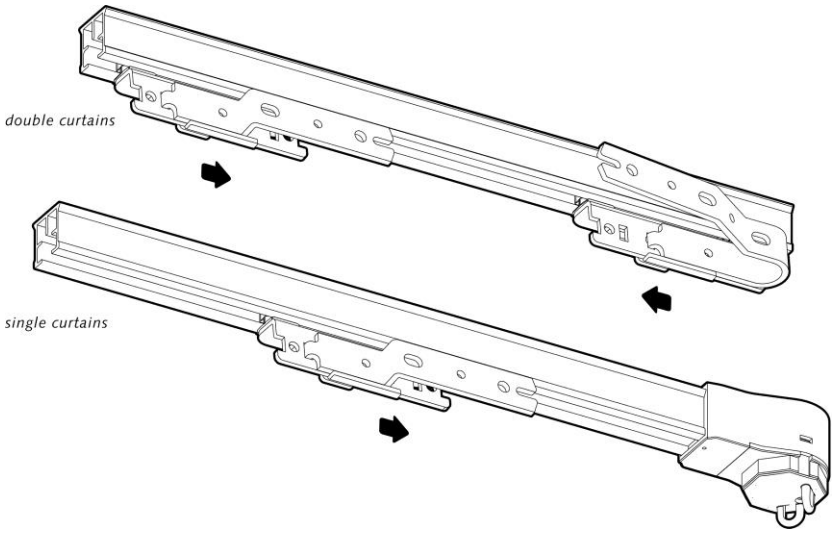

SETTING OPEN LIMIT:

When the closed position is reached, that end limit is set. Pull the master carrier(s) to the open position. The master carrier(s) will travel automatically towards the open position.

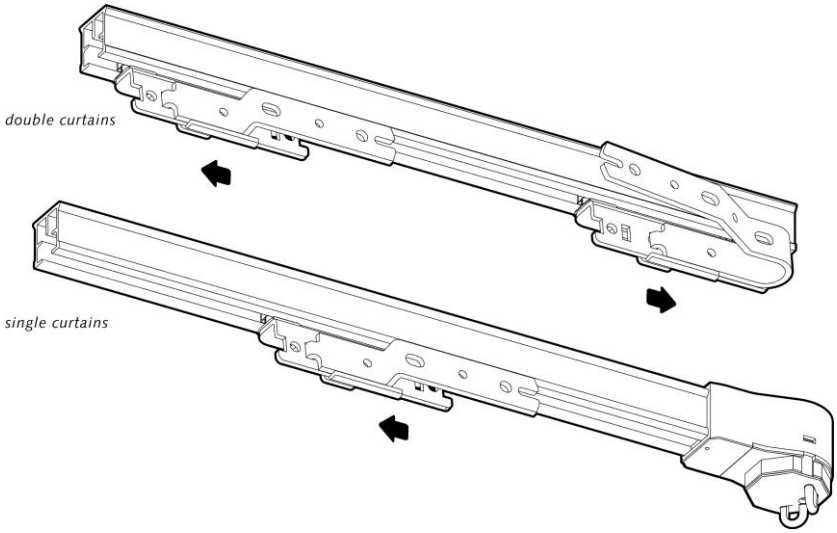

Stack back: When the master carrier reaches the fully open position it will stop (yellow LED4 is on). Now the open limit setting can be adjusted by hand, by remote or dry contact input. When the master carrier is not moved for 10 seconds, the yellow LED4 will go off and the open limit is set. The minimal automatic adjustment is 3 cm (1.2”).

If you are not satisfied with the programmed end limits, then re-set the end limits as shown in the configuration table on page 4 and proceed from step ⑥

Configure the **FOREST SHUTTLE® S / M / L Z-Wave**

Bottom view of the Shuttle

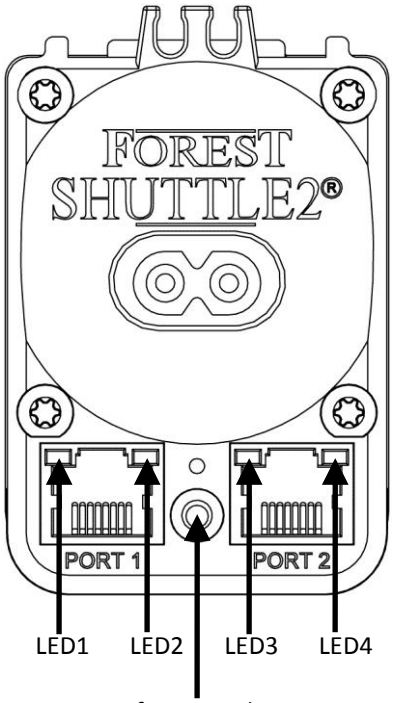

Use a pin to change settings in the configuration menu. Choose the setting you want to change (table below) and press the button that many times (corresponding with setting).

presses	LEDs 1 2 3 4 □□□□	function	factory default
1	■□□□	speed low	•
2	□■□□	speed high	
3	□□■□	Z-wave Include/Exclude	
4	□□□■	reset endlimits	
5	■□□□	dry-contact pulse	•
6	□■□□	dry-contact continuous	
7	□□■□	dry-contact single switch	
8	□□□■	touch impulse sensitivity high	•
9	■□□□	touch impulse sensitivity low	
10	□■□□	touch impulse off	
11	□□■□	IR channel 1	•
12	□□□■	IR channel 2	
13	■□□□	IR channel 3	
14	□■□□	IR channel 4	
15	□□■□	IR channel 5	
16	□□□■	factory default	
25	■□□□	Forced Z-wave learning out	

Confirm the desired setting by pressing the button for 4 seconds until the led blinks 3 times and goes OFF. These settings can also be done when finishing the installation.

Speed:

Standard speed is 14cm/s. For faster speed, 17cm/s, press 2x button and confirm by pressing the button once more for 4 seconds until the led blinks 3 times and goes OFF.

Including/Excluding Shuttle® S/M/L Z-Wave to a Z-Wave network:

Set your main Z-Wave controller (see manual controller) into learn mode. Press configuration button 3 times. LED3 is ON. Press and hold once more for 4 seconds, LED will start blinking for 10 seconds. The Shuttle S/L Z-Wave motor will be detected and included into the Z-Wave network of your main Z-Wave controller.

Forced Z-Wave learning out (Product Reset):

Please use this procedure only when your network primary controller is missing or otherwise inoperable.
Press the configuration button 25 times and confirm by pressing the button once more for 4 seconds until the led blinks 3 times and goes OFF. This way of excluding is less preferred. Please use this procedure only when the network primary controller is missing or otherwise inoperable.

Reset end limits:

For resetting only the end limits: press button 4x. To confirm, press button once more for 4 seconds until the led blinks 3 times and goes OFF.

Dry contact inputs:

Standard input is pulse contact. To set to continuous or single switch, press button 6 or 7 times respectively. To confirm, press button once more for 4 seconds until the led blinks 3 times and goes OFF. Please see page 5 for detailed explanation. Make sure the contact is free of potential.

Touch Impulse:

The Shuttle recognizes when the curtain is pulled by hand to open or close. The Shuttle will then open or close the curtain all the way. Default setting is high sensitive. Touch Impulse can be set to less sensitive or off, with 9 or 10 presses respectively. To confirm, press button once more for 4 seconds until the led blinks 3 times and goes OFF.

IR channel setting:

For Infra Red control an IR remote and an IR receiver is required. Standard the Shuttle is set to channel 1 and 'ALL'. To change to channel 2, 3 4 or 5, press resp. 12x, 13x, 14x or 15x button and confirm by pressing button once more for 4 seconds until the led blinks 3 times and goes OFF.
The IR receiver can only be connected to port 1. Place the eye of the receiver cord in view of the IR remote.
If necessary, change the IR channel as shown on page 4.

Factory default:

To reset all settings, press button 16x. To confirm, press button once more for 4 seconds until the led blinks 3 times and goes OFF.

Connecting to port 1 or port 2 of the **FOREST SHUTTLE® S / M / L Z-Wave**

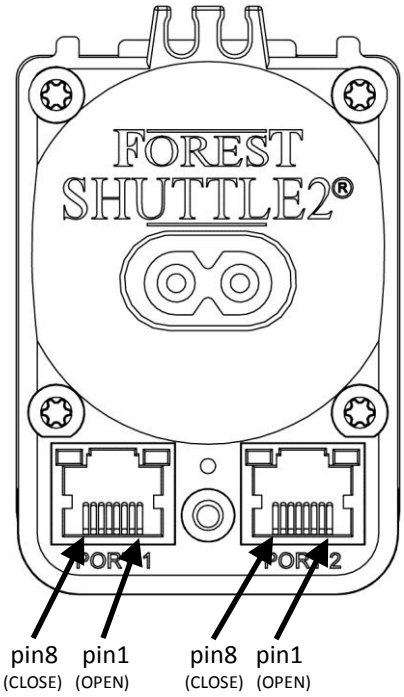

do-it-yourself plug

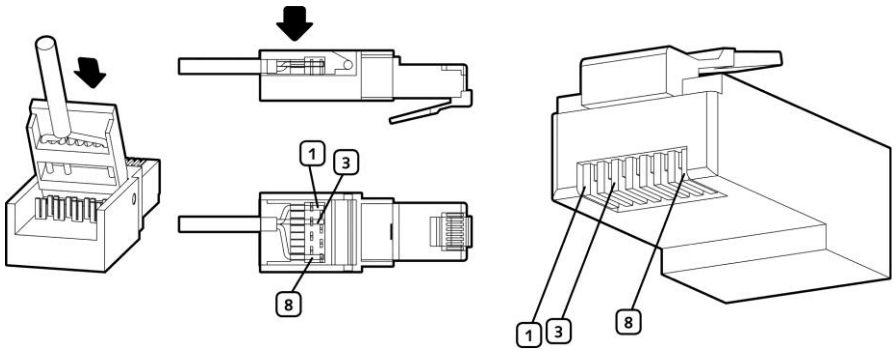

MANUAL SWITCH CONNECTED TO DRY CONTACT INPUTS

A manual switch or a relay output of a Home Automation System can easily be connected to the Shuttle S or L. Be sure the switch/relay is potential free. Use pins 1, 3 and 8 of PORT1 or PORT2.

OPEN: when pin 1 is connected to pin 3 (COMMON) the Shuttle will open the curtain.

CLOSE: when pin 8 is connected to pin 3 (COMMON) the Shuttle will close the curtain.

STOP: when pin 1 and 8 are connected to pin 3 (COMMON) the Shuttle will stop moving the curtain.

Different modes can be set:

- Pulse: when short contact is made the curtain will open or close fully (default setting)
- Continuous: the curtain will move as long as the contact is made (mostly used for Home Automation Systems)
- Single button switch (doorbell principle): either one of the four inputs will act as following: open → stop → close → stop → open → stop → close → stop etc.

To change this setting see page 4.

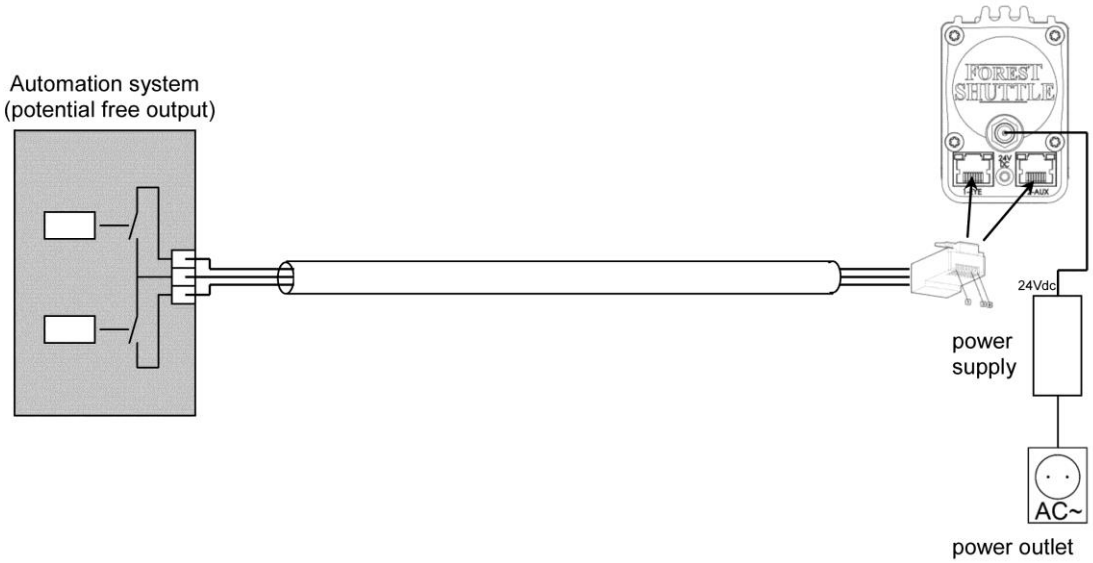

Advanced Z-Wave configuration of the **FOREST SHUTTLE® S / M / L Z-Wave**

Z-Wave Plus: Yes
Z+ Plus Role type: ROLE_TYPE_SLAVE_ALWAYS_ON
Z+ Device type: WINDOW_COVERING_POSITION_ENDPOINT_AWARE
Basic type: BASIC_TYPE_ROUTING_SLAVE
Generic type: GENERIC_TYPE_SWITCH_MULTILEVEL
Specific type: SPECIFIC_TYPE_CLASS_C_MOTOR_CONTROL
Listening: TRUE
Z-Wave Lib: 6.51.10

Supporting command classes

class: 0x5E COMMAND_CLASS_ZWAVEPLUS_INFO_V2
class: 0x85 COMMAND_CLASS_ASSOCIATION_V2
class: 0x59 COMMAND_CLASS_ASSOCIATION_GRP_INFO
class: 0x25 COMMAND_CLASS_SWITCH_BINARY
class: 0x26 COMMAND_CLASS_SWITCH_MULTILEVEL_V3
class: 0x86 COMMAND_CLASS_VERSION_V2
class: 0x72 COMMAND_CLASS_MANUFACTURER_SPECIFIC_V2
class: 0x5A COMMAND_CLASS_DEVICE_RESET_LOCALLY
class: 0x27 COMMAND_CLASS_SWITCH_ALL
class: 0x73 COMMAND_CLASS_POWERLEVEL
class: 0x7A COMMAND_CLASS_FIRMWARE_UPDATE_MD_V2

Routing slave

This Z-Wave product will be used as slave. Slave nodes are nodes in a Z-Wave network that receive commands and perform actions based on the command. A routing slave can route Z-Wave messages to other nodes in the network.

Always on slave

The Z-Wave plus role type of this routing slave product is ‘slave always on’.
That means that this device is always awake and does not go to sleep mode because it is an AC powered device. It is always available for communication with a controller.

This device can also act as a wireless repeater to forward commands for another device in the Z - Wave network to expand the range of the network. This function works for every Z - Wave device from any manufacturer when included into the same Z - Wave network. Unlike a normal slave a routing slave can store a number of static routes which he uses to send a routed RF frame to another node.

Include initiator

The include initiator is used when Primary and Inclusion Controllers include nodes into the network. When both the include initiator have been activated simultaneously the new node will be included to the network (
if the node was not included previously)

Exclude initiator

The exclude initiator is used by Primary Controllers to exclude nodes from the network. When the exclude initiator and a slave initiator are activated simultaneously, it will result in the slave being excluded from the
network (and reset to Node ID zero). Even if the slave was not part of the network it will still be reset by this action.

Z-Wave compatibility

Because this is a Z-Wave device, it means it can co-operate with other Z-Wave devices of other manufacturers. It can co-exist in a Z-Wave network existing with product from other manufacturers.

Hops & retries

The Z-Wave range has a range of up to 40 meters in line of sight. This signal is not limited to the 40 meters range due to routing the Z-Wave message to other nodes in the network. This way the range of the Z-Wave network can be expanded to 160 meters indoors (limit of 4 hops).

COMMAND_CLASS_ZWAVEPLUS_INFO_V2
With the Z-Wave plus info get command you can request the Z-Wave plus information of the Shuttle LZ. The information contains

- Role Type: Always On Slave
- Node Type: Z-Wave Plus Node
- Installer Icon: Window Covering Endpoint Aware
  This will be shown on a GUI as the following icon:

- Installer Icon: Window Covering Endpoint Aware
  This will be shown on a GUI as the following icon:

0x20 COMMAND_CLASS_BASIC
The basic command class has a supporting role.

The supporting role of the basic command class is mapped to the switch multilevel command class.
Where

- 0xFF is fully open
- 0x00 is fully closed
- 0x01 – 0x63 is a curtain rail position.

COMMAND_CLASS_ASSOCIATION_V2
The Association Command Class is used to associate other devices with the Shuttle LZ.

The Shuttle LZ only has 1 supported association group. This group holds the lifeline to the controller according to Z-Wave Plus standards.

Group 1: lifeline
Maximum supported nodes per group: 1

The node associated in this group will receive an unsolicited SWITCH_MULTILEVEL_REPORT frame every time the position of the curtain rail is changed, where the value represents the (changed) position.

It is most likely that a controller or screen is associated in this group to (unsolicited) report any changes to the curtain rail position.

Specific group report
Because there is only association group the reported group with this command is always group 1.

COMMAND_CLASS_ASSOCIATION_GRP_INFO
The Shuttle LZ supports only 1 association group.

Group 1 Name:
- Size: 8
- Name: 'Lifeline'

Group 1 Info
- Mode: 0
- Profile: 0x0001
    - Main profile : General (0x00)
    - Sub profile : Lifeline (0x01)
- Event Code: 0

Group 1 command list
- List length: 1
- COMMAND_CLASS_SWITCH_MULTILEVEL

NOTE: All other groups report list length 0.

COMMAND_CLASS_SWITCH_BINARY
The Switch Binary command class can be used to turn the Shuttle LZ fully open or fully closed.
Value:
- 0x00: Close
- 0xFF: Open

COMMAND_CLASS_SWITCH_MULTILEVEL_V3
The switch multilevel set command class is used to set the light to a preferred position.
- Values 0 – 99 (%) are used to set the position
- Value 255 is used to set the curtain fully open.

The switch multilevel start level change command is used to start open/close the curtain.
This level change is stopped when
- Stop multilevel start level command is received
- The curtain reached an end position (fully open or full closed)

Supported Report
Because of version 3 of this command class the Shuttle LZ responds with the following types.

- Primary Switch Type: 0x03
    - 0xFF is Open
    - 0x00 is Closed
- Secondary Switch Type: 0x00
  (NOT SUPPORTED)

NOTE 1: due to the limitations of this type of multilevel, a curtain rail the *Duration* byte of the SWITCH_MULTILEVEL_SET and SWITCH_MULTILEVEL_START_LEVEL_CHANGE command is used as an timeout offset to start the changed position
Example 1:
- Curtain rail has position 50%
- Shuttle LZ receives SWITCH_MULTILEVEL_SET command with *value* 80% and *duration* 0 seconds.
- The curtain rail is directly moved to position 80%

Example 2:
- Curtain rail has position 50%
- Shuttle LZ receives SWITCH_MULTILEVEL_SET command with *value* 20% and *duration* 10 seconds.
- The curtain rail is moved to position 20% after 10 seconds.

NOTE 2: due to the limitations of this type of multilevel, a curtain rail the *Start Level* byte of the SWITCH_MULTILEVEL_START_LEVEL_CHANGE command is ignored in all cases.

COMMAND_CLASS_VERSION_V2
This command class is used to obtain information about the Shuttle LZ. The Z-Wave library type, the Z-Wave protocol version and the application version will be reported.

Because this product supports version 2 it reports the additional information: hardware version and number of firmware targets.

COMMAND_CLASS_MANUFACTURER_SPECIFIC_V2
This will report information about the manufacturer. This product will contain the manufacturer ID of Forest Group NL.

Manufacturer ID of Forest Group NL is 0x0207, the ID of this product is 39.

Because the version 2 is supported this command class can also be used to request the serial number of the device with the DEVICE_SPECIFIC_GET command.

COMMAND_CLASS_DEVICE_RESET_LOCALLY
When the product is excluded manually the DEVICE_RESET_LOCALLY_NOTIFICATION command is sent to node associated in the lifeline association group.

COMMAND_CLASS_SWITCH_ALL
The Shuttle LZ supports switch all functionality and therefore can be in included in a switch all broadcast.

If Shuttle LZ is configured to switch all mode:

0x00 : is excluded from all switch on/off functionality.
0x01 : is excluded from the all on but not the all off.
0x02 : is excluded from the all off but not the all on.
0xFF : All on and all off are both included.

COMMAND_CLASS_POWERLEVEL
The Power level Command Class defines the RF transmitting power. This command is used to test the connectivity of a network. This command class makes it possible for supporting controllers to SET/GET the RF transmitting power level of a node and test specific links between nodes in the network.

COMMAND_CLASS_FIRMWARE_UPDATE_MD_V2
The Shuttle LZ supports OTA (Over-The-Air) update.
This means that it is possible to update your firmware using Z-Wave. To accomplish this a capable controller is needed.

Technical specification of the **FOREST SHUTTLE® S / M / L Z-Wave**

	Shuttle® S Z-wave	Shuttle® M Z-wave	Shuttle® L Z-wave
Part# EU freq. 868.4MHz:	n/a	5232000004	5232000002
US freq. 908.4MHz:	5232000005	5232000006	n/a
Voltage Shuttle®:	24Vdc	24Vdc	100 - 240V~ 50 - 60Hz 0.8A
Max. power:	40W	72W	40W
Torque:	1Nm	1.5Nm	1Nm
Speed 1:	14 cm/s	14cm/s	14 cm/s
Speed 2:	17 cm/s	17cm/s	17 cm/s
Max. curtain weight:	40kg (no curves)	70kg (no curves)	40kg (no curves)
Length:	20cm (7.9”)	25 (10”)	28cm (11”)
Net. weight motor:	700 gr.	980gr.	930 gr.
Protection degree:	IP20	IP20	IP20
Max. running time (in one direction):	240 sec.	240 sec.	240 sec.
Sound level:	< 40dB	< 40dB	< 40dB
Ambient temperature:	0 - 40°C (32 - 104°F)	0 - 40°C (32 - 104°F)	0 - 40°C (32 - 104°F)
Relative humidity:	10 – 80%	10 – 80%	10 – 80%
Maximum useable altitude above sea level:	2000m (6561ft.)	2000m (6561ft.)	2000m (6561ft.)
Certification & Marking:	CE	CE	CE

TECHNICAL SPECIFICATION POWER SUPPLY:

	Shuttle® S:	Shuttle® M Receiver:
Model:	ZDA240150	ZF120A-2403000
Voltage input:	100 - 240V~ 50 - 60Hz 0.8A	100 - 240V~ 50 - 60Hz 1.2A
Voltage output:	24Vdc	24Vdc
Insulation class:	II	II
Certification & Marking:	CE, cULus, FCC, CCC	CE, cULus, FCC, CCC

If another power supply is used or a central power supply, each Shuttle® S must be protected with a 2.5A slow fuse.
Each Shuttle® M Receiver must be protected with a 4A slow fuse.

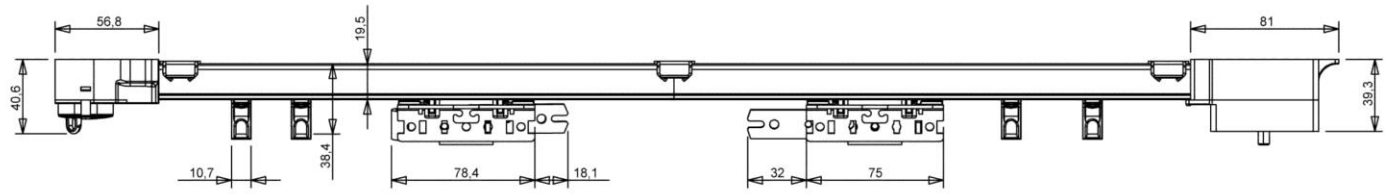

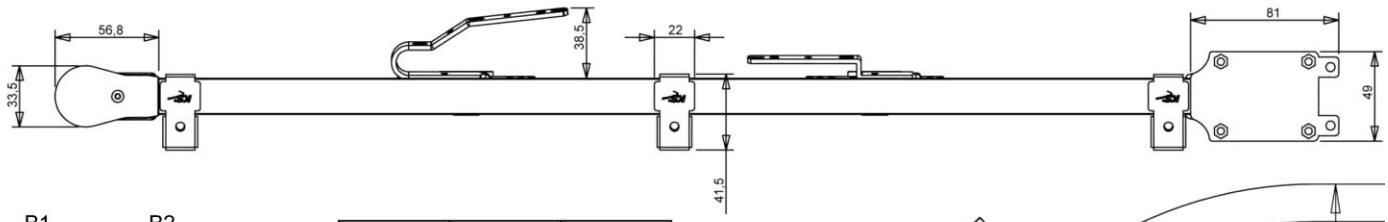

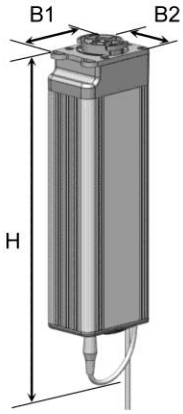

	H	B1	B2
Shuttle S	225mm	77mm	49mm
Shuttle L	305mm	77mm	49mm

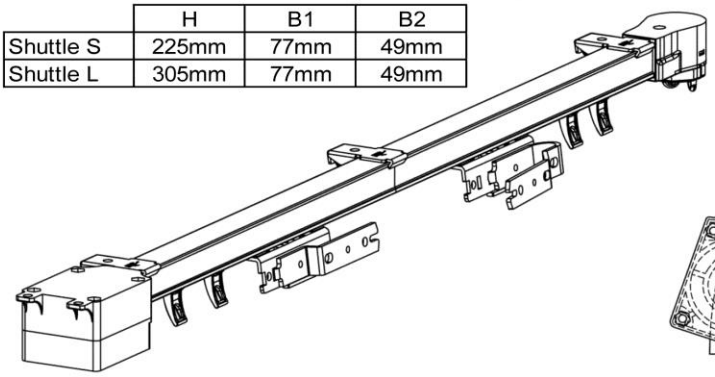

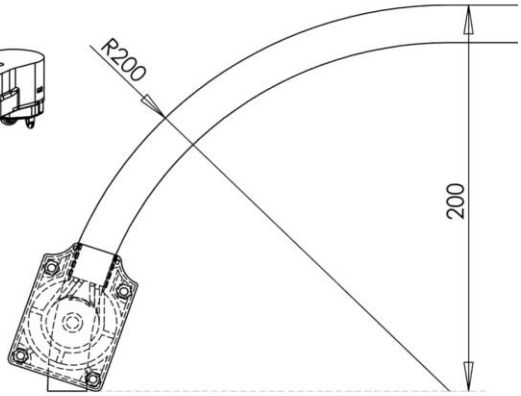

Forest Shuttle is not suitable for humid spaces, like bathrooms or outdoors.
It is important for the safety of persons to follow these instructions. Save these instructions.
Do not use the product for any other purpose than intended. In order for the Forest Shuttle S / M / L to function correct and safe, the complete curtain system must be assembled with original parts and devices of Forest Group Nederland B.V. This includes all components of the curtain track and power supply adaptor.

Forest Group does not assume liability for resulting damages to property or personal injury, defects, labour on location, service calls, reinstallation or expenses involved shipping, packing or returning goods, if the product has been abused/modified in any way or damaged by improper use or failure to observe these operating instructions. The warranty/guarantee will then expire!

Do not allow children to play with the system or controls. Keep remote controls away from children.
Frequently examine the installation for imbalance and signs of wear or damage. Do not use if repair or adjustment is necessary.

v1_3