OPERATING MANUAL

EN

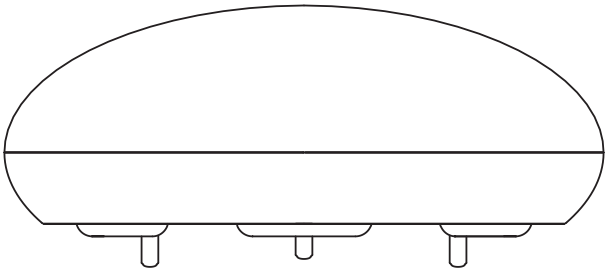

FIBARO FLOOD SENSOR

FGFS-101

CONTENTS

v2.1

#1: Description and features 4
#2: Basic activation 5
#3: Adding/removing the device 6
#4: Diagrams and connection 7
#5: Powering modes 9
#6: Operating the device 10
#7: Association 12
#8: Z-Wave range test 13
#9: Advanced parameters 14
#10: Specifications 19
#11: Regulations 20

Important safety information

Read this manual before attempting to install the device!

Failure to observe recommendations included in this manual may be dangerous or cause a violation of the law. The manufacturer, Fibar Group S.A. will not be held responsible for any loss or damage resulting from not following the instructions of operating manual.

The alarm functionality of devices is an additional feature increasing the comfort level of your home automation system. If you want to use professional security service, please contact them to determine what systems can provide a protection of your estate.

Compliance with safety standards:

The device is designed to be used in Z-wave home automation systems (e.g. FIBARO) and is complaint with IEC/UL/CSA 60950-1. In case of the integration with another system, e.g. alarm system, it is required to verify the compliance with additional standards.

General information about the FIBARO System

FIBARO is a wireless smart home automation system, based on the Z-Wave protocol. All of available devices can be controlled through a computer (PC or Mac), smartphone or tablet. Z-Wave devices are not only receivers, but can also repeat the signal, increasing the Z-Wave network's range. It gives advantage over traditional wireless systems that require direct link between transmitter and receiver, as a result the construction of the building could affect network's range negatively.

Every Z-Wave network has its unique identification number (home ID). Multiple independent networks can exist in the building without interfering. Transmission security of FIBARO System is comparable to wired systems.

Z-Wave technology is the leading solution in smart home automation. There is a wide range of Z-Wave devices that are mutually compatible, independently of manufacturer. It gives the system the ability to evolve and expand over time. For more information visit www.fibaro.com.

#1: Description and features

FIBARO Flood Sensor is a universal, Z-Wave Plus compatible, flood and temperature sensor. The device can be powered using battery, 12/24V DC power supply or both. Flood alarm is sent to the Z-Wave network devices or additionally to any external system through opening a NC contact using the external power supply.

The device has built in temperature sensor that allows to monitor ambient temperature. FIBARO Flood Sensor is designed to be placed on the floor or mounted on a wall (in this case Flood Sensor probes should be extended using addition wire). The device has a built-in visual LED indicator and an acoustic alarm.

In addition, the sensor is equipped with a tilt sensor reporting tilt or movement to the main controller e.g. when someone has taken the Sensor from its original location.

FIBARO Flood Sensor is sink-proof, which means it drifts on the water surface and keeps on sending alarm signal in case of substantial inundation of water.

NOTE

This device may be used with all devices certified with the Z-Wave Plus certificate and should be compatible with such devices produced by other manufacturers.

NOTE

FIBARO Flood Sensor is a Security Enabled Z-Wave Plus product and a Security Enabled Z-Wave Controller must be used in order to fully utilize the product.

Main features of FIBARO Flood Sensor:

- compatible with any Z-Wave or Z-Wave+ Controller,
- supports protected mode (Z-Wave network security mode) with AES-128 encryption,
- may be connected to any external system (potential free output terminal),
- extremely easy installation - simply put on a surface prone to flooding,
- may be installed anywhere - flood sensor's contacts extended with a wire,
- battery or VDC powered. When connected to an external 12/24V DC power source, the battery serves as an emergency power source,
- theft protection - tilt or moving is reported to the Z-Wave network or external system's controller,
- two operating modes - flood/temperature sensor or just a temperature sensor,
- alarm is signalled by sound, visual indicator (LED diode) and Z-Wave.

FIBARO Flood Sensor is a fully compatible Z-Wave PLUS device.

#2: Basic activation

1. Turn the cover counter-clockwise and open it.

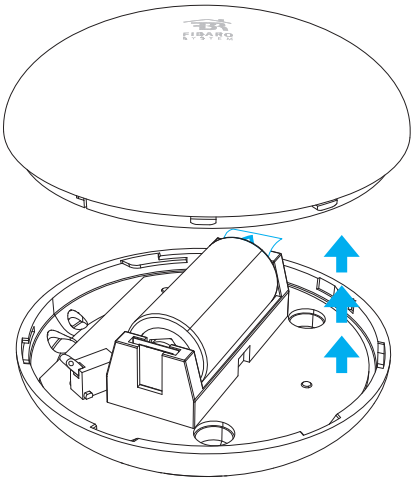

2. Remove the battery blocker.

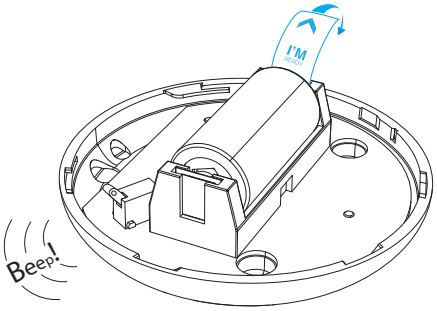

3. Flood Sensor will confirm being powered with a short beep and a LED blink.
4. Add the device (see "Adding/removing the device" on page 6).
5. Close the cover and turn it clockwise.

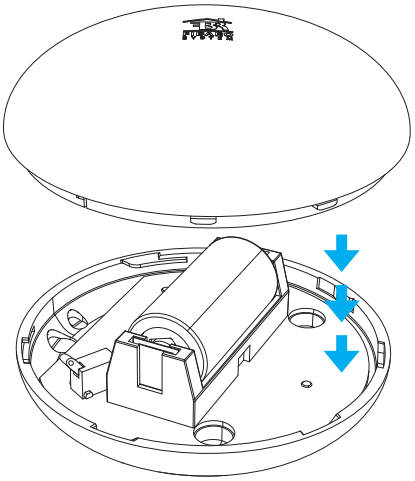

6. Place the sensor on a surface prone to flooding. Three electrodes underneath the device should evenly touch the surface.

NOTE

When powered, the device will indicate Z-Wave status with colour of LED:

- **Green** - the device is already added to the Z-Wave network.
- **Red** - the device is not added to any Z-Wave network.

NOTE

After completing installation it is recommended to test sensor's operation by placing the entire sensor or its probes' extension wire onto water surface.

NOTE

When changing the Sensor's location, it's recommended to wake up the device and re-configure the Z-Wave network by triple clicking the TMP button or removing and inserting the battery.

#3: Adding/removing the device

NOTE

Adding in security mode must be performed up to 2 meters from the controller.

NOTE

In case the Sensor is not added, please reset the Sensor and repeat the adding procedure.

Adding (Inclusion) - Z-Wave device learning mode, allowing to add the device to existing Z-Wave network.

To add the device to the Z-Wave network:

1. Open the cover.
2. Place the Sensor within the direct range of your Z-Wave controller.
3. Set the main controller in (security/non-security) add mode (see the controller's manual).
4. Quickly, three times press the TMP button.

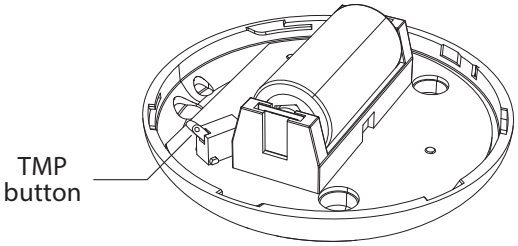

5. Wait for the adding process to end.
6. Successful adding will be confirmed by the Z-Wave controller's message.

NOTE

Removing Flood Sensor from the Z-Wave network restores all the default parameters of the device.

Removing (Exclusion) - Z-Wave device learning mode, allowing to remove the device from existing Z-Wave network.

To remove the device from the Z-Wave network:

1. Open the cover.
2. Place the Sensor within the direct range of your Z-Wave controller.
3. Set the main controller into remove mode (see the controller's manual).
4. Quickly, three times press the TMP button.

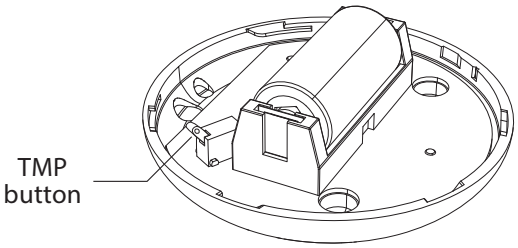

5. Wait for the removing process to end.
6. Successful removing will be confirmed by the Z-Wave controller's message.

#4: Diagrams and connection

Connecting the FIBARO Flood Sensor in a manner inconsistent with manual may cause risk to health, life or material damage.

Notes for the diagrams and probes marking:

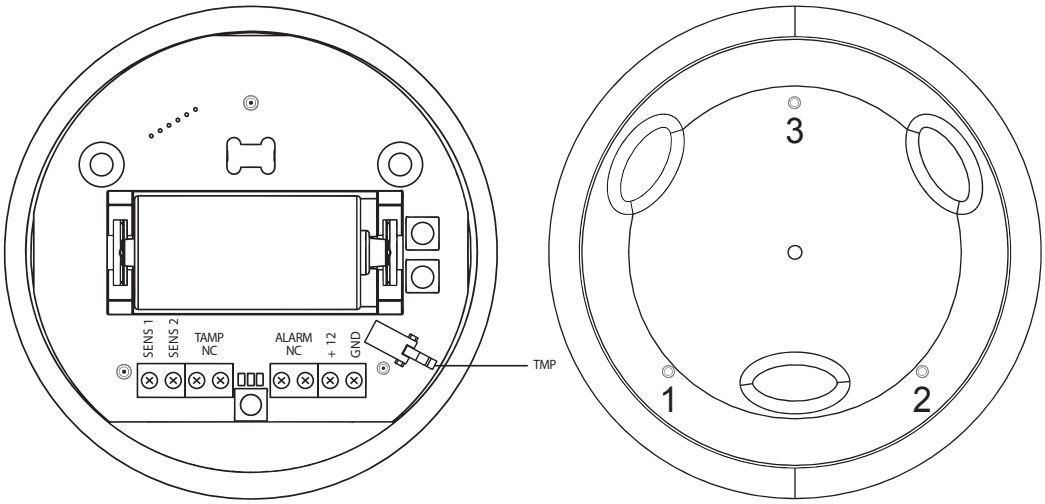

+12V - 12 / 24 VDC positive terminal

GND - negative (ground) terminal

ALARM NC - potential-free flood sensor terminals (for wired systems)

TAMP NC - potential-free tamper terminals (for wired systems)

SENS1, SENS2 - flood sensor electrodes' terminals

TMP - tamper button (used to add/remove the device)

Connection to a constant power source:

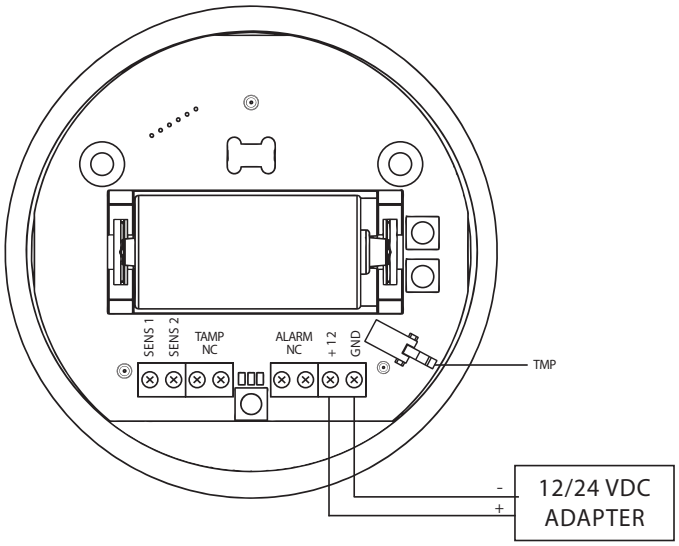

CAUTION

Connect while observing wiring diagram shown in this manual only. Incorrect wiring may be dangerous or result in the device breakdown.

CAUTION

To prevent accidental pulling out make certain that cables are firmly attached to the wire connectors and screws are properly tightened.

NOTE

The TMP button has two functions:
1. Adding / Removing the device to / from the Z-Wave network,
2. Tamper contact for 4th Association Group. When a sensor is added to the Z-Wave network, cover open alarm may be activated (according to parameter 74 settings).

NOTE

ALARM NC and TAMP NC connectors may be used as end-of-line protective loop's terminals.

Connection with external wired system:

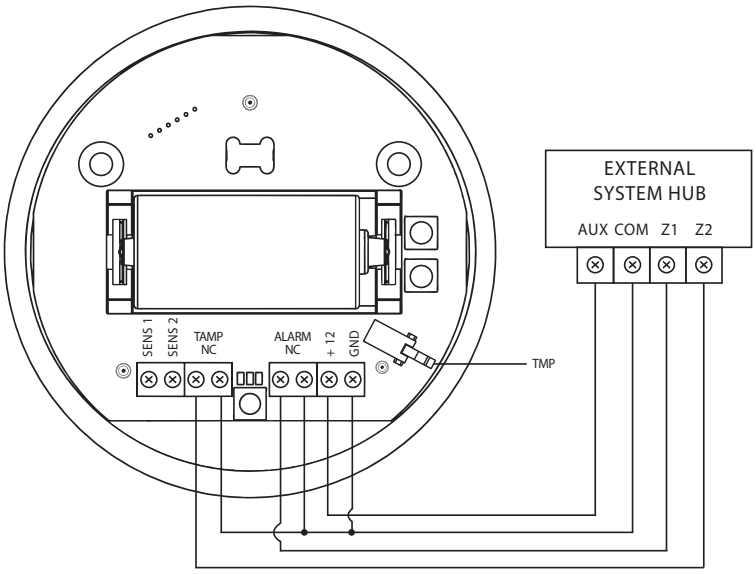

NOTE

Mounting screws shown in a diagram are not included in the package. Choose a screw type depending on the building material it is being attached to.

NOTE

The Sensor detects electrical conductivity between electrodes 1 and 3, 1 and 2 and electrodes connected to contacts (SENS1 and SENS2).

CAUTION

Contacts SENS1 and SENS2 are dedicated to flood detection only. Do not connect external voltage!

Extending Flood Sensor contacts with a wired probe:

If you want the device to be mounted on a wall or in a distance from flooding source, sensor should be extended using an external probe (not included).

We recommend using extension probes or cables designed to detect water. Probes ends should be coated with non-corrosive metal. Connection wires should not be longer than 3m with 18-26AWG (0.14 - 0.82mm^2). It applies also to VDC power source wires.

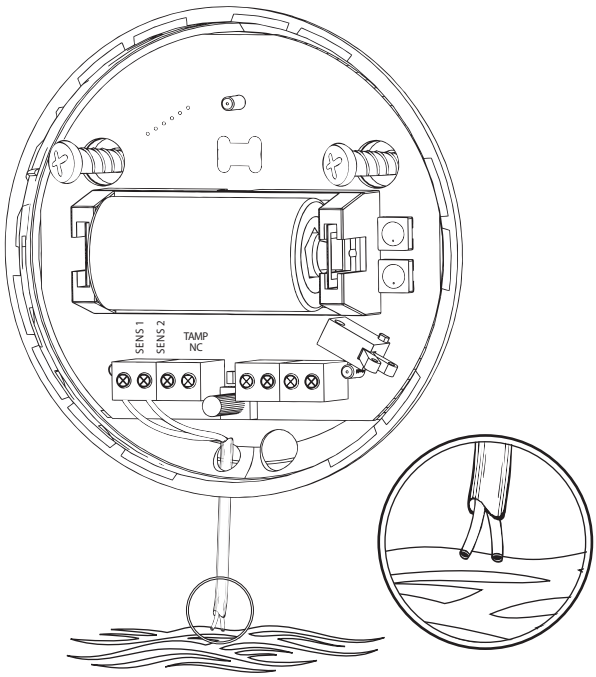

#5: Powering modes

There are two powering modes for the Flood Sensor. By default it is powered by a factory included battery. In addition it can work with a constant voltage, after connecting a 12/24V DC power supply to +12 and GND terminals (see „Diagrams and connection" on page 7).

Powering mode configuration is carried out automatically, while the device is being added into the Z-Wave network.

When battery powered, the Flood Sensor communicates with the main Z-Wave controller periodically. Detected alarms are sent immediately, but the configuration parameters and associations settings will only be updated at specified wake up intervals or at manual wake up (single TMP button click).

When added to the network as a DC powered device, the device will update its associations and configurations immediately. It will also allow it to serve as a signal repeater in the Z-Wave network, which increases the chance of successful communication among devices in the same network.

CAUTION

Using batteries other than specified may result in explosion. Dispose of properly, observing environmental protection rules.

Switching to constant voltage powering mode:

1. Remove the sensor from the Z-Wave network.
2. Connect constant voltage power source (12/24 VDC) to +12 and GND terminals in accordance with „Diagrams and connection" on page 7.
3. Add the sensor to the Z-Wave network.

The Flood Sensor may operate without a battery if 12/24V power supply is connected. Installing a battery is recommended though, as it will serve as an emergency power source. When constant power fails, sensor will automatically shift to backup power mode. All reports, including flood and temperature, will be sent immediately, but it will not be possible to modify the configuration or association settings until constant power returns. In this mode Z-Wave signal repeating is not possible.

NOTE

The Flood Sensor will automatically exit emergency mode once 12/24 VDC at +12 and GND terminals is detected

FIBARO Flood Sensor's battery life is estimated at about 2 years at factory default settings. Current battery level is displayed in a Z-Wave controller interface. Red battery icon means the battery needs replacement. In order to avoid triggering a tamper alarm while replacing the battery, 4th association group's associations must be deleted and configuration parameters should be restored back to default settings.

#6: Operating the device

Controlling the Flood Sensor using the TMP button:

The Flood Sensor is equipped with the TMP button, which allows to perform the following actions:

1x click: send Wake Up notification (in battery mode), confirm selected menu option (if menu is active)

3x click: add/remove the device to/from a Z-Wave network

Holding: enter/navigate through menu

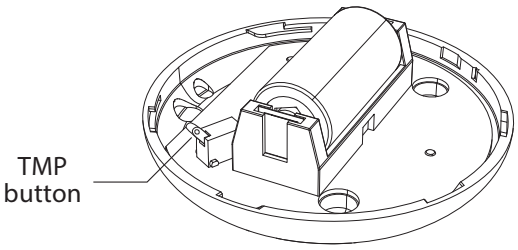

Controlling the Flood Sensor with FIBARO Home Center controller:

The Flood Sensor has two built-in sensors – flood and temperature sensors. In the Home Center controller the Sensor will be shown as two devices.

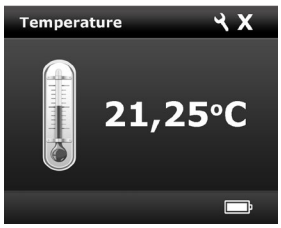

Visual indications:

The Flood Sensor is equipped with a LED diode, signalling sensor's operating modes and alarms. In addition the visual indicator may inform of the Z-Wave network range and the current temperature.

Visual indicator signalling modes:

1. Flood alarm is signalled with alternating white and blue light.
2. In battery powering mode, with parameter no. 63 set to 1, visual indicator will periodically show temperature readouts (depending on parameter 50, 51, 61 and 62 settings).
3. In constant powering mode, the current temperature readouts will be continuously signalled with a colour depending on parameter 50, 51, 61 and 62 settings.
4. Currently selected menu position is signalled with an illumination colour.

NOTE

By default, flood sensor's insensitivity is set to 1 second, which means flooding will be reported one second after it's been detected.
Tilt tamper is insensitive to little vibrations and turns. After its activation, insensitivity is turned off for 15 seconds. After that, each Sensor's movement will trigger audible alarm, consisting of 3, brief acoustic signals.

Menu allows to perform Z-Wave network actions. In order to use the menu:

1. Press and hold the TMP button.
2. Wait for the device to indicate desired position with a colour:
   - **WHITE** - confirmation of entering the menu
   - **GREEN** - cancel alarm for associated devices and the controller (only if the device is no longer flooded)
   - **VIOLET** - Z-Wave network's range test
   - **YELLOW** - full reset
3. Release the TMP button.
4. Click the TMP button to confirm selection.

Waking up the Flood Sensor:

When in battery mode the Flood Sensor needs to be woken up to receive information about the new configuration from the controller, like parameters and associations.

To wake up the sensor manually, click the TMP button located inside the housing.

The device will also wake up and update its data upon startup when added in battery mode.

Resetting the Flood Sensor:

Reset procedure allows to restore the device back to its factory settings, which means all information about the Z-Wave controller and user configuration will be deleted.

1. Make sure the sensor is powered.
2. Press and hold the TMP button.
3. Wait for the visual LED indicator to glow yellow (4th position of the MENU).
4. Release the TMP button.
5. Click the TMP button once to confirm selection.
6. After few seconds the device will restart with factory settings, which is signalled with the red visual indicator colour and an acoustic signal.

NOTE

Resetting the device is not the recommended way of removing the device from the Z-Wave network. Use reset procedure only if the primary controller is missing or inoperable. Certain device removal can be achieved by the procedure of removing described in "Adding/removing the device" on page 6.

#7: Association

NOTE

Association ensures direct transfer of control commands between devices, is performed without participation of the main controller and requires associated device to be in the direct range.

Association (linking devices) - direct control of other devices within the Z-Wave system network e.g. Dimmer, Relay Switch, Roller Shutter or scene (may be controlled only through a Z-Wave controller).

The Flood Sensor provides the association of four groups:

1st Association Group – "Lifeline" reports the device status and allows for assigning single device only (main controller by default).

2nd Association Group – "Flood Control" devices in this group will be switched on or off when flood status changes (done via BASIC SET command frames).

3rd Association Group – "Flood Alarm" is assigned to the device status - devices in this group will receive notification about flood detection or cancellation. Useful for devices that can trigger alarms.

4th Association Group – "Tamper Alarm" is assigned to the TMP button and tilt sensor - devices in this group will receive a notification when the sensor is moved or the cover is taken off (which normally holds the button). Useful for devices that can trigger alarms. Functionality can be altered by parameter 74.

The Flood Sensor in 2nd to 4th group allows to control up to 5 regular and 5 multichannel devices per an association group, with the exception of "LifeLine" that is reserved solely for the controller and hence only 1 node can be assigned.

It is not recommended to associate more than 10 devices in general, as the response time to control commands depends on the number of associated devices. In extreme cases, system response may be delayed.

To add an association (using the FIBARO Home Center controller):

1. Go to device options by clicking the icon:
2. Select the „Advanced" tab.
3. Specify to which group and what devices are to be associated.
4. Wait for the configuration process to end. Sending relevant information to devices added to associated groups may take even a few minutes.
5. Wake up the device by clicking the TMP button to speed up the configuration process.

#8: Z-Wave range test

The Flood Sensor has a built in Z-Wave network main controller's range tester.

Follow the below instructions to test the main controller's range:

1. Press and hold the TMP button until the visual indicator glows violet.
2. Release the TMP button.
3. Click the TMP button once to confirm selection.
4. Visual indicator will indicate the Z-Wave network's range (range signalling modes described below).
5. To exit Z-Wave range test, press the TMP button briefly.

Z-Wave range tester signalling modes:

Visual indicator pulsing green - the Flood Sensor attempts to establish a direct communication with the main controller. If a direct communication attempt fails, the device will try to establish a routed communication, through other modules, which will be signalled by visual indicator pulsing yellow.

Visual indicator glowing green - the Flood Sensor communicates with the main controller directly.

Visual indicator pulsing yellow - the Flood Sensor tries to establish a routed communication with the main controller through other modules (repeaters).

Visual indicator glowing yellow - the Flood Sensor communicates with the main controller through the other modules. After 2 seconds the device will retry to establish a direct communication with the main controller, which will be signalled with visual indicator pulsing green.

Visual indicator pulsing violet - the Flood Sensor does communicate at the maximum distance of the Z-Wave network. If connection proves successful it will be confirmed with a yellow glow. It's not recommended to use the device at the range limit.

Visual indicator glowing red - the Flood Sensor is not able to connect to the main controller directly or through another Z-Wave network device (repeater).

CAUTION

To make Z-Wave range test possible, the device must be added to the Z-Wave controller. Testing may stress the network, so it is recommended to perform the test only in special cases.

NOTE

Communication mode of the Flood Sensor may switch between direct and one using routing, especially if the device is on the limit of the direct range.

#9: Advanced parameters

The Flood Sensor allows to customize its operation to user's needs. The settings are available in the FIBARO interface as simple options that may be chosen by selecting the appropriate box.

In order to configure the Flood Sensor (using the FIBARO Home Center controller):

1. Go to the device options by clicking the icon:
2. Select the „Advanced" tab.

Wake up interval (battery mode)

Available settings: **0** or **60-86400** (in seconds, 1min - 24h)

Default setting: **21 600** (every 6 hours)

The Flood Sensor will wake up at each defined time interval and always try to connect with the main controller. After successful communication attempt, the sensor will update configuration parameters, associations and settings and then will go into standby mode. After failed communication attempt (eg. no Z-Wave range) the device will go into standby mode and retry to establish connection with the main controller after the next time interval.

Setting wake up interval to 0 disables sending Wake Up notification to the controller automatically. Wake up may be still performed manually by a single TMP button click.

Longer time interval means less frequent communication and thus a longer battery life

1. Alarm cancellation delay

Determines time period (in seconds) by which a Flood Sensor will retain the flood state after the flooding itself has ceased. The sensor will keep on reporting flooding to the main controller. This parameter setting does not affect acoustic and visual alarms, which turn off immediately after flooding ceases.

Available settings:	**0-3600** (in seconds, each 1s)		
Default setting:	**0**	Parameter size:	**2** [bytes]

2. Acoustic and visual signals On / Off in case of flooding

The parameter allows for deactivation visual and acoustic alarm.

Parameter allows for increasing a battery life. Setting changes will not affect the sensor's communication with the main controller - commands to association groups, alarms and reports will still be sent.

Available settings:	**0** - acoustic and visual alarms inactive **1** - acoustic alarm inactive, visual alarm active **2** - acoustic alarm active, visual alarm inactive **3** - acoustic and visual alarms active		
Default setting:	**3**	Parameter size:	**1** [byte]

7. Requested dimming level / roller blind opening level when sending turn on / open command to 2nd association group devices

Determines the requested "on" level to be sent to devices from 2nd association group upon flood event.

Available settings:	**1-99** - requested level **255** - turn a device on		
Default setting:	**255**	Parameter size:	**2** [bytes]

9. Deactivate turning off devices in 2nd association group & alarm cancellation in 3rd group

This setting decides whether device turn off commands and alarm cancellation notifications will be sent to devices in 2nd and 3rd association groups (respectively)

Setting the parameter's value to 0 disables sending these two commands to associated devices. This means that these devices WILL NOT be informed when the flooding has ceased. It is still possible to cancel alarms in 3rd association group by choosing second (green) menu position (see "Menu & visual indications" on page 10).

Available settings:	**0** - alarm (flooding) cancellation inactive **1** - alarm (flooding) cancellation active		
Default setting:	**1**	Parameter size:	**1** [byte]

10. Temperature measurement interval

Time interval (in seconds) between consecutive measurements of battery level and temperature (done by built-in temperature sensor).

If the temperature differs from previously reported by a value determined in parameter 12, it will be reported to the Z-Wave controller.

In battery mode more significant battery level changes will be reported. Short time intervals mean more frequent communication, which results in shortened battery life.

After consecutive FAILED and SUCCESSFUL communication attempts, the Sensor will go to standby mode.

Available settings:	**1-65535** (in seconds)		
Default setting:	**300** (5min)	Parameter size:	**4** [bytes]

12. Temperature measurement hysteresis

Determines a minimum temperature change value (insensitivity level), resulting in a temperature report being sent to the main control-

ler, according to the parameter 10 settings.

Available settings:	**1-1000** (each 0.01°C)		
Default setting:	**50** (0.5°C)	Parameter size:	**2** [bytes]

50. Low temperature alarm threshold

The parameter stores a temperature value, below which visual indicator blinks with a colour determined by a parameter 61 settings. By default the visual indicator blinks blue.

Available settings:	**- 10000 to +10000** (each 0.01°C)		
Default setting:	**1500** (15°C)	Parameter size:	**2** [bytes]

51. High temperature alarm threshold

The parameter stores a temperature value, above which visual indicator blinks with a colour determined by the parameter 62 settings. By default the visual indicator blinks red.

Available settings:	**- 10000 to +10000** (each 0.01°C)		
Default setting:	**3500** (35°C)	Parameter size:	**2** [bytes]

61. Low temperature alarm indicator colour

Parameter stores RGB colour value (see the note below for details).

Available settings:	**0-16777215**		
Default setting:	**255**	Parameter size:	**4** [bytes]

62. High temperature alarm indicator colour

Parameter stores RGB colour value (see the note below for details).

Available settings:	**0-16777215**		
Default setting:	**16711680**	Parameter size:	**4** [bytes]

NOTE

The main controller interprets colours as a sum of its component colours value. Each colours value is a number from 0 to 255.

Indicated colour = 65536 * **RED** + 256 * **GREEN** + **BLUE**

Colour	Decimal value
Red	16711680
Green	65280
Blue	255
Yellow	16776960
Turquoise	65535
Orange	16750848
White	16777215
Indicator turned off	0

63. Temperature indication using LED visual indicator

Parameter determines visual indicator's operation. Setting to 0 turns the temperature LED indication off, saving battery life.

Available settings:	**0** - visual indicator does not indicate the temperature **1** - visual indicator indicates the temperature (blink) every Temperature Measurement Interval (parameter 10, constant current and battery) and Wake Up Interval (battery mode) **2** - visual indicator indicates the temperature continuously, only in constant power mode		
Default setting:	**2**	Parameter size:	**1** [byte]

73. Temperature measurement compensation

Parameter stores a temperature value to be added to or deducted from the current temperature measured by internal temperature sensor in order to compensate the difference between air temperature and temperature at the floor level.

Available settings:	**-10 000 to +10 000**		
Default setting:	**0** (0.00°C)	Parameter size:	**2** [bytes]

74. Alarm frame sent to 1st and 4th Association Group activation (MOVEMENT_TAMPER / BUTTON_TAMPER)

The device is able to report tamper alarms resulting from sensor's tilt/movement or TMP button state change (e.g. taking off the top cover).

Available settings:	**0** - tamper alarms inactive **1** - button tamper alarm active **2** - movement tamper alarm active **3** - button and movement tampers alarm active		
Default setting:	**2**	Parameter size:	**1** [byte]

75. Alarms signalization duration

The device is capable of automatically turning off alarm signalization after a certain amount of time. Long lasting alarm may reduce battery life, when constantly signalized.

The parameter determines time after which alarm will become "quiet" - still active but the device will go into battery saving mode. Visual or acoustic alarm will be reactivated after time specified in the parameter 76. When alarm status ceases, alarm will be turned off immediately.

Available settings:	**0** - alarms active indefinitely **1-65535** - time in seconds		
Default setting:	**0**	Parameter size:	**4** [bytes]

NOTE

Parameter 75 is ignored when parameter 2 is set to 0.

NOTE

In case a time period set in parameter 76 is shorter than the one specified in parameter 75, the device will not quiet the alarm, it will remain active.

76. Alarm signalization reactivation period

Parameter determines a time period after which an alarm will be turned back on (in case it was turned off by parameter 75 setting). It will also resend commands to 2nd and 3rd association groups as if the alarm was detected again.

Available settings:	**0** - alarm reactivation inactive **1-65535** - time in seconds		
Default setting:	**0**	Parameter size:	**4** [bytes]

77. Flood sensor functionality turned off

Allows to turn off the internal flood sensor. Tamper and built in temperature sensor will remain active.

Available settings:	**0** - Default flood sensor operation (flood detection, reactions) **1** - Built-in flood sensor TURNED OFF (does not change its state in the main controller, does not send alarm notifications nor turn on/off commands to 2nd/3rd association groups with flood state changes. Always visible in the main controller as turned off)		
Default setting:	**0**	Parameter size:	**1** [byte]

78. Associations in Z-Wave network security mode

This parameter defines how commands are sent in specified association groups: as secure or non-secure. Parameter is active only in Z-Wave network security mode. It does not apply to 1st "Lifeline "group.

Available settings:	**0** - none of the groups sent as secure **1** - 2nd group "Control" sent as secure **2** - 3rd group "Alarm" sent as secure **4** - 4th group „Tamper" sent as secure		
Default setting:	**7**	Parameter size:	**1** [byte]

#10: Specifications

Power supply:	Battery and/or power supply unit
Battery type:	3V, CR123A
Supply type:	12–24V DC, LPS or NEC class 2
Power consumption (at DC operation):	0.4W
Maximum voltage at output terminals (ALARM NC, TAMP NC):	24V DC / 20V AC
Output terminals maximum current carrying capacity:	25mA
EU standards compliance:	RoHS 2011/65/EU RED 2014/53/EU
Radio protocol:	Z-Wave (500 series chip)
Radio frequency:	868.4 or 869.8 MHz EU; 908.4, 908.42 or 916.0 MHz US; 921.4 or 919.8 MHz ANZ; 869.0 MHz RU;
Range:	up to 50m outdoors up to 40m indoors (depending on terrain and building structure)
Operating temperature:	0–40°C
Measured temperature range:	-20–100°C
Temperature measuring accuracy:	0.5°C (within 0–40°C range)
Dimensions (Diameter x Height):	72 x 28 mm

NOTE

This product is intended to be supplied by a certified Power Supply Unit marked "Class 2" or "LPS" and rated from 12V DC to 24V DC.

CAUTION

Using batteries other than specified may result in explosion. Dispose of properly, observing environmental protection rules.

NOTE

Radio frequency of individual device must be same as your Z-Wave controller. Check information on the box or consult your dealer if you are not sure.

#11: Regulations

This device complies with Part 15 of the FCC Rules

Operation is subject to the following two conditions:
1. This device may not cause harmful interference
2. This device must accept any interference received, including interference that may cause undesired operation. This equipment has been tested and found to comply with the limits for a Class B digital device, pursuant to part 15 of the FCC Rules. These limits are designed to provide reasonable protection against harmful interference in a residential installation. This equipment generates, uses and can radiate radio frequency energy and, if not installed and used in accordance with the instructions, may cause harmful interference to radio communications. However, there is no guarantee that interference will not occur in a particular installation. If this equipment does cause harmful interference to radio or television reception, which can be determined by turning the equipment off and on, the user is encouraged to try to correct the interference by one or more of the following measures:

- Reorient or relocate the receiving antenna.
- Increase the separation between the equipment and receiver.
- Connect the equipment into an outlet on a circuit different from that to which the receiver is connected.
- Consult the dealer or an experienced radio/TV technician for help.

Changes and modifications not expressly approved by the manufacturer or registrant of this equipment can void your authority to operate this equipment under Federal Communications Commission's rules.

Industry Canada (IC) Compliance Notice

This device complies with Industry Canada license-exempt RSSs. Operation is subject to the following two conditions: (1) this device may not cause interference, and (2) this device must accept any interference, including interference that may cause undesired operation of the device.

Cet appareil est conforme aux normes d'exemption de licence RSS d'Industry Canada. Son fonctionnement est soumis aux deux conditions suivantes : (1) cet appareil ne doit pas causer d'interférence et (2) cet appareil doit accepter toute interférence, notamment les interférences qui peuvent affecter son fonctionnement.

Legal Notices

All information, including, but not limited to, information regarding the features, functionality, and/or other product specification are subject to change without notice. Fibaro reserves all rights to revise or update its products, software, or documentation without any obligation to notify any individual or entity.
FIBARO and Fibar Group logo are trademarks of Fibar Group S.A. All other brands and product names referred to herein are trademarks of their respective holders.

DGT Warning Statement

Article 12

Without permission, any company, firm or user shall not alter the frequency, increase the power, or change the characteristics and functions of the original design of the certified lower power frequency electric machinery.

Article 14

The application of low power frequency electric machineries shall not affect the navigation safety nor interfere a legal communication, if an interference is found, the service will be suspended until improvement is made and the interference no longer exists.

第十二條
經型式認證合格之低功率射頻電機，非經許可，公司、商號或使用者均不得擅自變更頻率、加大功率或變更原設計之特性及功能。
第十四條

低功率射頻電機之使用不得影響飛航安全及干擾合法通信；經發現有干擾現象時，應立即停用，並改善至無干擾時方得繼續使用。
前項合法通信，指依電信法規定作業之無線電通信。
低功率射頻電機須忍受合法通信或工業、科學及醫療用電波輻射性電機設備之干擾。

Warning

This product is not a toy. Keep away from children and animals!

Information according REACH

The included Panasonic CR123A battery contains 1,2-Dimethoxyethane substance. Normal use of the device does not expose the user to a given substance.

Declaration of conformity

Hereby, Fibar Group S.A. declares that the device is in compliance with the essential requirements and other relevant provisions of Directive 2014/53/EU. The full text of the EU declaration of conformity is available at the following internet address: www.manuals.fibaro.com

WEEE Directive Compliance

Device labelled with this symbol should not be disposed with other household wastes. It shall be handed over to the applicable collection point for the recycling of waste electrical and electronic equipment.