## PAN08-3E Motor controller

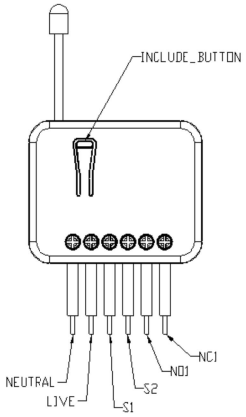


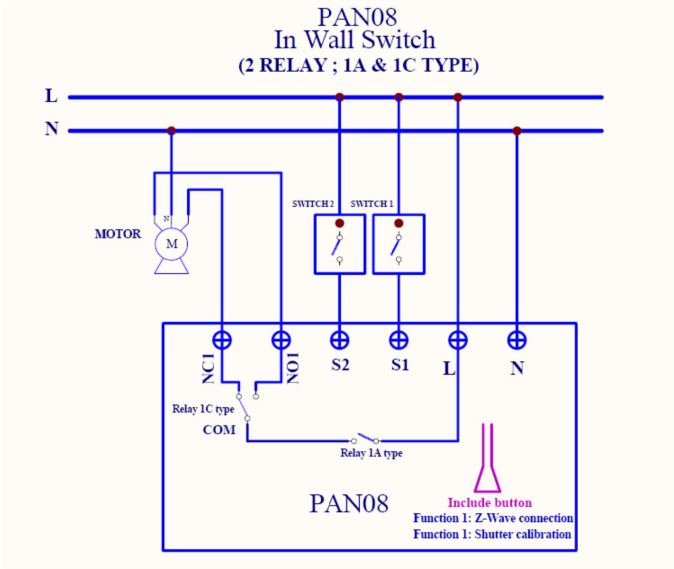


**Fig 1. Assembling**

The in-wall Roller Shutter Controller is designed to switch rise/lower roller shutter connected to its terminals using radio waves, controllers and a push button directly connected to this Roller Controller.

This in-wall Roller Shutter Controller is a transceiver which is a Z-Wave Plus™ enabled device. This product can be operated in any Z-Wave network with other Z-Wave certified devices from other manufacturer. Within the network it will act as repeater regardless of vender to increase reliability of the network. Slim design let the Controller can easily hide itself into the wall box and that will be good for the house decoration.

The new smart relay calibration technology can reduce the inrush current caused by the load and let the module work perfectly with many kind of Roller Shutter.

This in-wall Roller Shutter Controller is able to detect position of the Shutter by using the patterned power measuring method, so it can be remote controlled not only fully up or down , but also can be adjusted to ex. 30% or 50%. And when manual controlled by push button, the controller also can memorize the position and send the new shutter position to its controller (ex. IP-Gateway).

## Adding to Z-Wave™ Network

In the front casing, there is an include button with LED indicator below which is used to carry out inclusion, exclusion, reset or association. When first power is applied, its LED flashes on and off alternately and repeatedly at 0.5 second intervals. It implies that it has not been assigned a node ID and start auto inclusion.

### Auto Inclusion

The function of auto inclusion will be executed as long as the PAN08 does not have

Node ID and just connect the PAN08 to main power.

**Note:** Auto inclusion timeout is 2 minute during which the node information of explorer frame will be emitted once every several seconds. Unlike “inclusion” function as shown in the table below, the execution of auto inclusion is free from pressing the Include button on the PAN08.

The table below lists an operation summary of basic Z-Wave functions. Please refer to the instructions for your Z-Wave™ Certificated Primary Controller to access the Setup function, and to include/exclude/associate devices

| **Function** | **Description** | **LED Indication** |
|---|---|---|
| No node ID | The Z-Wave Controller does not allocate a node ID to the PAN08. | LED 2-second on, 2-second off |
| Inclusion (Add a new node) | 1. Put your Z-Wave controller into inclusion mode by following the instructions provided by the controller manufacturer. | One press one flash LED |
| | 2. Pressing Include button three times within 2 seconds will enter inclusion mode. | |
| Exclusion (Remove an existed node) | 1. Put your Z-Wave controller into exclusion mode by following the instructions provided by the controller manufacturer. | One press one flash LED |
| | 2. Pressing Include button three times within 2 seconds will enter exclusion mode. | |
| | Node ID has been excluded. | LED 0.5s On, 0.5s Off (Enter auto inclusion) |
| Reset | 1. Pressing Include button three times within 2 seconds will enter inclusion mode. | Use this procedure only in the event that the primary controller is lost or otherwise inoperable. |
| | 2. Within 1 second, press Include button again for 5 seconds. | |
| | 3. IDs are excluded. | LED 0.5s On, 0.5s Off (Enter auto inclusion) |
| Association | 1. The PAN11 is an always listening Z-Wave device, so associations be added or removed by a controller at any time.<br>Or If your controller requires to have the PAN11 send a 'node information frame' or NIF for associations, pressing the On/Off button three times within 2 seconds will cause the PAN11 to send its NIF. | LED One press one flash |
| | 2. There are 1 group (Group 1) for the PAN08 | |
| ※Adding a node ID allocated by Z-Wave Controller means inclusion. Removing a node ID allocated by Z-Wave Controller means exclusion.<br>※Failed or success in including/excluding the node ID can be viewed from the Z-Wave Controller. | | |

## LED Indication

To distinguish what mode the PAN08 is in, view from the LED for identification.

| State Type | LED Indication |
|---|---|
| Motor activate | No matter up or down, close or open, Led will flash every second while Motor activate.<br>When S1 or S2 close to L, the LED will flash even when the motor stop by itself, this is to let user know the S1 or S2 still close and not been release yet. |
| No node ID | Under normal operation, when the PAN08 has not been allocated a node ID, the LED flashes on and off alternately at 2-second intervals. By pressing S1 S2 or Include button, it will stop flashing temporarily. |
| Learning | When PAN08 is in learning mode, LED flashes on and off alternately and repeatedly at 0.5 second intervals. |
| Overload | When overload state occurs, the PAN08 is disabled and LED flashes on and off alternately at 0.2 second intervals. PAN08 will send alarm_type=8 alarm_Level=0xFF to Group1, Overload state can be cleared by disconnect and reconnect the PAN08 to the main power |

## Choosing a Suitable Location

1. Do not locate the PAN08 facing direct sunlight, humid or dusty place.
2. The suitable ambient temperature for the PAN08 is 0°C~40°C.
3. Do not locate the PAN08 where exists combustible substances or any source of heat, e.g. fires, radiators, boiler etc.
4. After putting it into use, the body of PAN08 will become a little bit hot of which phenomenon is normal.

## Moving Range Calibration

1. It is important to carry out a shutter calibration process before you control the shutter to move. Press inclusion button over 3 seconds and release before the 6th second, the roller shutter controller will start the shutter calibration process. The process is composed of three continue stages. The shutter move to the TOP in first stage, and move to the BOTTOM in second stage, and move to the TOP again in third stage. Then PAN08 will know the total range of UP and DOWN.

2. During the shutter calibration process, any emergencies happen you can press and release the include button to stop the process.

3. If user found the direction is reverse, this may cause by the wrong connection of NC and NO to the motor, please exchange NC and NO connection and execute calibration process again.

4. For safe issue, please select the motor which can stop by itself when go to bottom end or top end.

## Installation and operation

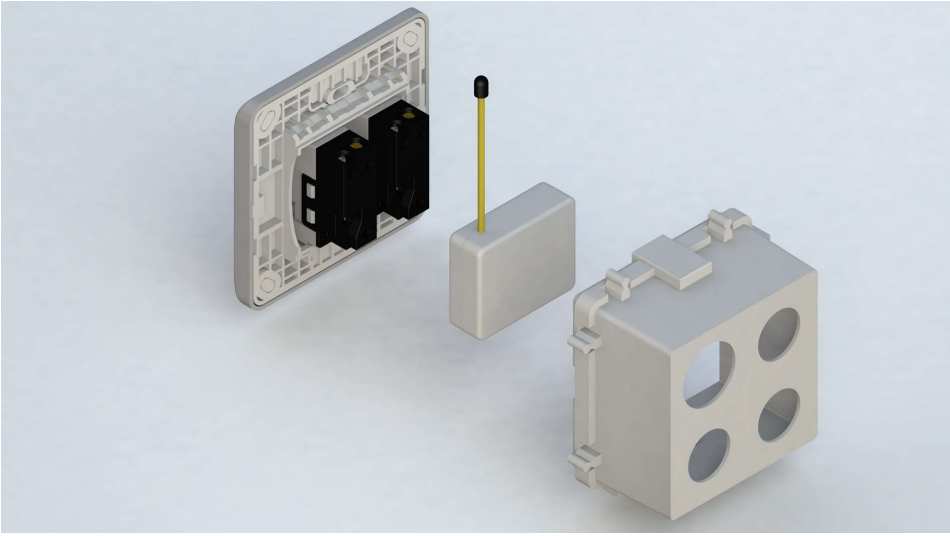

1. Put the in wall PAN08 into a wall box and connect the AC power wire L,N to PAN08 connector L, N.

2. Connect the wall switch to the PAN08 as Fig1

3. To manually switch up and down of the shutter, simply press the external switch S1 or S2. The detail is described in 7-5.

4. PAN08 built in meter function and can read the Watt, KWh, V(Voltage), I(Current), PF(Power Factor) of the load by using Z-Wave command class, user can set a threshold current to get the warning caused by abnormal operation

5. PAN08 have overload protection function, and can help to prevent short circuit caused by load.

## Programming

### 1. Basic Command Class

The PAN08 will respond to BASIC and BINARY commands that are part of the Z-Wave system.

### 1.1 BASIC_GET

When PAN08 receive Basic Get Command, it will send Basic Report Command to report the position of the shutter. When the report value is 0x00, that mean the shutter is at the Bottom, if the report value is 0x63 that mean the shutter is at the Top, any other value between 0x01~0x62 imply Shutter at the position between top and bottom.

| Basic Get Command: **[Command Class Basic, Basic Get]** |
|---|
| Basic Report Command：<br>**[Command Class Basic, Basic Report, Value = 0x00 (BOTTOM)]**<br>**[Command Class Basic, Basic Report, Value = 0x01~0x62 (Between BOTTOM and TOP)]**<br>**[Command Class Basic, Basic Report, Value = 0x63 (TOP)]** |

### 1-2 BASIC_SET

PAN08 can accept Basic Set Command which value is either (0x00) Bottom or Top (0x63) or (0x01-0x62) the position between TOP and Bottom. Other value (0x64-0xFE) is not acceptable.

| |
|---|
| **[Command Class Basic, Basic Set, Value = 0x63] control the shutter to the top (0x63)** |
| **[Command Class Basic, Basic Set, Value = 0x00(0)] control the shutter to the bottom(0x00)** |
| **[Command Class Basic, Basic Set, Value = 0xFF] control the shutter to the most recent (non-zero) level**. |
| **[Command Class Basic, Basic Set, Value = 0x01-0x62] control the shutter to the position between bottom and top** |

## 2 Binary Switch Command Class

### 2-1 BINARY_SWITCH_GET,

When PAN08 receive Binary Switch Get Command, it will send Binary Switch Report Command to report the position of the shutter. When the report value is 0x00, that mean the Shutter is bottom down, if the report value is 0xFF that mean the Shutter is at the top. But if report value is 0xFE means the position is unknown.

Binary Switch Get Command：

**[Command Class Binary Switch, Binary Switch Get]**

Binary Switch Report Command：

**[Command Class Binary Switch, Binary Switch Report, Value = 0x00 (BOTTOM)]**

**[Command Class Binary Switch, Binary Switch Report, Value = 0xFE (UNKNOWN)]**

**[Command Class Binary Switch, Binary Switch Report, Value = 0xFF(TOP)]**

### 2-2 BINARY_SWITCH_SET

PAN08 can only accept Binary Switch Set Command which value is either (0x00) Bottom or Top (0xFF), other value is not acceptable.

**[Command Class Binary Switch, Binary Switch Set, Value = 1~99 or 0xFF(255)]**

control the shutter to the top (0xFF). But if the shutter is on the way down, this command will stop the shutter.

**[Command Class Binary Switch, Binary Switch Set, Value = 0x00(0)]**

control the shutter to the bottom(0x00). But if the shutter is on the way up, this command will stop the shutter.

### 3. Multilevel Switch Command Class (Version 3)：

### 3-1 MULTILEVEL SWITCH SET:

PAN08 can accept Multilevel Switch Set Command which value is either (0x00) Bottom or Top (0x63) or (0x01-0x62) the position between TOP and Bottom. Other value (0x64-0xFE) is not acceptable.

**[Command Class Multilevel Switch, Multilevel Switch Set, Value = 0x63]** control the shutter to the top (0x63)

| |
|---|
| **[Command Class Multilevel Switch, Multilevel Switch Set, Value = 0x00(0)]** control the shutter to the bottom(0x00) |
| **[Command Class Multilevel Switch, Multilevel Switch Set, Value = 0xFF(255)]** control the shutter to the **the most recent (non-zero) level**. |
| **[Command Class Multilevel Switch, Multilevel Switch Set, Value = 0x01-0x62]** control the shutter to the position between Bottom and Top. |

**3-2 MULTILEVEL SWITCH GET**:

When PAN08 receive Multilevel Switch Get Command, it will send Multilevel Switch Report Command to report the position of the shutter. When the report value is 0x00, that mean the shutter is at the Bottom, if the report value is 0x63 that mean the shutter is at the top, any other value between 0x01~0x62 imply shutter at the position between top and bottom.

| |
|---|
| Switch Multilevel Get Command：<br>**[Command Class Multilevel Switch, Multilevel Switch Get]** |
| Multilevel Switch Report Command：<br>**[Command Class Multilevel Switch, Multilevel Switch Report,**<br>**Value = 0x00(BOTTOM)]**<br>**[Command Class Multilevel Switch, Multilevel Switch Report,**<br>**Value = 0x01~0x62(Between BOTTOM and TOP)]**<br>**[Command Class Multilevel Switch, Multilevel Switch Report,**<br>**Value = 0x63 (TOP)]** |

**3-3 MULTILEVEL SWITCH START LEVEL CHANGE:**

**This is the command which user can move the shutter up to the top or down to the bottom.**

| |
|---|
| **[Command Class Multilevel Switch, Multilevel Switch Start Level Change, Up/Down Value]** |

**3-3.1 Up/Down Bit:**

If Up/Down Bit=0x00 Shutter move up

If Up/Down Bit=0x01 Shutter move down

If Up/Down Bit=0x03 no move

| |
|---|
| **[Command Class Multilevel Switch, Multilevel Switch Start Level Change, Up/Down=0x00] control the shutter to the top (0x63)** |
| **[Command Class Multilevel Switch, Multilevel Switch Start Level Change, Up/Down=0x01] control the shutter to the bottom (0x00)** |
| **[Command Class Multilevel Switch, Multilevel Switch Start Level Change, Up/Down=0x03] Don't move the shutter or stop the moving shutter** |

ATT. 1. Ignore_Start_Level、Start_Level、Dimming_Duration、Inc/Dec、Step_size can not be used.

2. **PAN08 can not control the speed of motor.**

3. It may have some distance error caused by motor start up time.

4. If user found the error become significant, you may using S1 or S2 move shutter to the end or remote move shutter to 0% and 100%, and that will automatically calibrate this error.

**3-3.4** MULTILEVEL SWITCH STOP LEVEL CHANGE:

When receive Multilevel Switch Stop Level change Command PAN08 will stop the motor.

## 4 SCENE ACTIVATION COMMAND CLASS

4-1 Scene Activation Set Command：

When PAN08 receive Scene Activation Set command, it will read the level of the pre-configured Scene ID from EEPROM. And it will be controlled as a Multilevel Switch Set command that described in 3-1. The Dimming Duration of the command will be ignored because PAN08 can not control the speed of motor.

## 5 SCENE ACTUATOR CONFIGURATION COMMAND CLASS

5-1 Scene Actuator Configuration Set Command：

| |
|---|
| **[Command Class Scene Actuator Configuration, Scene Actuator Configuration Set, Scene ID=1~255, Override bit=0, Level=0~99 or 255] The current setting of PAN08 will not be override.** |
| **[Command Class Scene Actuator Configuration, Scene Actuator Configuration Set, Scene ID=1~255, Override bit=1, Level=0~99 or 255] The Level value in this Command is associated to the Scene ID.** |

5-2 Scene Actuator Configuration Get Command：

| |
|---|
| **[Command Class Scene Actuator Configuration, Scene Actuator Configuration Get, Scene ID=1~255 ]** |
| **[Command Class Scene Actuator Configuration, Scene Actuator Configuration Report, Scene ID=1~255, Level=0~99 or 255, Dimming Duration=0~0xFE] Report the Pre-configured Scene ID of PAN08.** |

**Z-wave's Groups introduction (**Maximum 1 node **)**

There is only one group called Group1，there is only one node for Group1 which support MULTILEVEL_SWITCH_REPORT、METER_REPORT_COMMAND_V3、ALARM_REPORT and DEVICE_RESET_LOCALLY_NOTIFICATION.

**6-1** Device reset locally notification：

When PAD07 is reset manually, it will send a DEVICE_RESET_LOCALLY_ NOTIFICATION to the nodes of group 1.

**6-2 Report the shutter position ：**

Every time when user press S1 or S2 and let shutter to move, PAN08 will report the position status to controller, and at the moving process when change over 10% PAN08 will send Multilevel Switch Report to Group 1 as well.

Multilevel Switch Report：

Ex. Report position at 30%

[Command Class Multilevel Switch， Multilevel Switch Report，Value = 30(%)]

**6-3 Meter Command Class：**

The Switch will report its (1) instant Power Consumption (Watt) or (2) accumulated power consumption(KWH) or (3) AC load Voltage (V) or (4) AC load current ( I ) (5)

load power factor (PF) to Z-Wave Controller after receive the Meter Get Command from Z-Wave Controller.

When the power consumption of load vary over 5%, it will send Meter report to the nodes of Group as well

### 6-3.1 Instant Power Consumption (Watt) of Switch

When receiving Meter Get Command, it will report Meter Report Command to the node asked.

| |
|---|
| Meter Get Command: **[Command Class Meter, Meter Get, Scale =0x02(W)]** |
| Meter Report Command:<br>**[Command Class Meter · Meter Report · Rate Type = 0x01 · Meter Type = 0x01 · Precision = 1 · Scale = 0x02 · Size = 4 · Meter Value(W) ]** |

Example:

Meter Value 1 = 0x00 (W)

Meter Value 2 = 0x00 (W)

Meter Value 3 = 0x03 (W)

Meter Value 4 = 0xEA (W)

Meter(W) = Meter Value 3 *256 + Meter Value 4 = 100.2W

### 6-3.2 Accumulated Power Consumption (KW/h)

When receiving Meter Get Command, it will report Meter Report Command to the node asked.

| |
|---|
| Meter Get Command: **[Command Class Meter, Meter Get, Scale = 0x00 (KW/h)]** |
| Meter Report Command:<br>**[Command Class Meter · Meter Report · Rate Type = 0x01 · Meter Type =0x01 · Precision = 2 · Scale = 0x00 · Size = 4 · Meter Value (KWh)]** |

Example:

Scale = 0x00 (KWh)

Precision = 2

Size = 4 Bytes (KW/h)

Meter Value 1 = 0x00(KWh)

Meter Value 2 = 0x01(KWh)

Meter Value 3 = 0x38(KWh)

Meter Value 4 = 0xA3(KWh)

Accumulated power consumption (KW/h) = (Meter Value 2*65536) + (Meter Value 3*256) + (Meter Value 4) = 800.35 (KW/h)

### 6-3.3 AC load Voltage (V)

When receiving Meter Get Command, it will report Meter Report Command to the node asked.

| |
|---|
| Meter Get Command: **[Command Class Meter, Meter Get, Scale =0x04(V)]** |
| Meter Report Command:<br>**[Command Class Meter · Meter Report · Rate Type = 0x01 · Meter Type = 0x01 · Precision = 1 · Scale = 0x04 · Size = 2 · Meter Value(V)]** |

Example:

Scale = 0x04 (V)

Precision = 1

Size = 2 (2 Bytes of V)

Meter Value 1 = 0x09(V)

Meter Value 2 = 0x01(V)

AC load Voltage = (Meter Value 1*256) +(Meter Value 2)= 230.5 (V)

**6-3.4 AC load current ( I )**

When receiving Meter Get Command, it will report Meter Report Command to the node asked.

| Meter Get Command: **[Command Class Meter, Meter Get, Scale =0x05(I)]** |
|---|
| Meter Report Command: **[Command Class Meter · Meter Report · Rate Type = 0x01 · Meter Type = 0x01 · Precision = 2 · Scale = 0x05 · Size = 2 · Meter Value(I)]** |

Example:

Scale = 0x05 (I)

Precision = 2

Size = 2 (2 Bytes of I)

Meter Value 1 = 0x01(I)

Meter Value 2 = 0x21(I)

AC load current = (Meter Value 1*256) +(Meter Value 2)= 2.89 (A)

**6-3.5 load power factor (PF)**

When receiving Meter Get Command, it will report Meter Report Command to the node asked.

| Meter Get Command: **[Command Class Meter, Meter Get, Scale =0x06(PF)]** |
|---|
| Meter Report Command: **[Command Class Meter · Meter Report · Rate Type = 0x01 · Meter Type = 0x01 · Precision = 2 · Scale = 0x06 · Size = 1 Bytes · Meter Value(PF)]** |

Example:

Scale = 0x06 (PF)

Precision = 2

Size = 1 (1 Byte of PF)

Meter Value 1 = 0x63(PF) (It means that the load power factor is 0.99)

**6-3.6 Reset Accumulated Power Consumption (KWh)**

Whenever re-start counting the accumulated power consumption is needed, you can use Meter Reset Command to clear it.

| Meter Reset Command：**[Command Class Meter, Meter Reset]** |
|---|

6-3 Alarm Report Command：

When PAN08 detect Overload, it will send Alarm_Report to Group1, Alarm Type = 0x08, Alarm Level=0xFF. When receive Alarm_Get command with Alarm Type = 0x08 and the PAN08 not in overload status , it will send Alarm_Report, Alarm Type = 0x08, Alarm Level=0x00.

6-3.1 Alarm Report：

When in Two Push Button switch type, S1 or S2 close to L and not been release, and PAN08 receive some control moving command from Z-Wave RF (Ex. BASIC_SET、BINARY_SWITCH_SET、

MULTILEVEL_SWITCH_SET、MULTILEVEL_SWITCH_START_LEVEL_CHANGE or MULTILEVEL_SWITCH_STOP_LEVEL_CHANGE or SCENE_ACTIVATION_SET), PAN08 won't do any change in position but report alarm to Group1 this indicate that the S1 or S2 not been released.

When PAN08 detect a overload power, it will report alarm to Group1

| |
|---|
| [Command_Class_Alarm, Alarm_Report, Alarm Type = 0x08, Alarm Level = 0xFF (Overload)] |
| [Command_Class_Alarm, Alarm_Report, Alarm Type = 0x08, Alarm Level = 0x00 (Normal)] |

When in Two Push Button switch type, S1 or S2 are closed and not released to open, and PAN08 receive any control moving command from Z-Wave RF, it will report alarm to Group1.

| |
|---|
| [Command_Class_Alarm, Alarm_Report, Alarm Type = 0x01, Alarm Level = 0xFF (S1 or S2 close to L)] |
| [Command_Class_Alarm, Alarm_Report, Alarm Type = 0x01, Alarm Level = 0x00 (S1 and S2 released from L)] |

## 7 Z-Wave's Configuration

| Configuration Parameter | Function | Size (Byte) | Value | Unit | Default | Description |
|---|---|---|---|---|---|---|
| 1 | Watt Meter Report Period | 2 | 0x01-0x7FFF | 5s | 720 | 5*720s=3600s=1 hour |
| 2 | KWH Meter Report Period | 2 | 0x01-0x7FFF | 10 min | 6 | 6*10min= 1 hour |
| 3 | Threshold of current for Load Caution | 2 | 10-500 | 0.01 A | 500 | 500*0.01A=5A |
| 4 | Threshold of KWH for Load Caution | 2 | 1-10000 | 1 KWh | 10000 | |
| 5 | External switch type | 1 | 1-2 | | 2 | 1: One Push button<br>2:Two Push button |
| 6 | Level report mode | 1 | 1-2 | | 2 | 1:Report destination level in 5s<br>2:Report 10 percent level while running |

### 7-1 Watt Meter Report Period:

If the setting is configured for 1hour (set value =720), the PAN08 will report its instant power consumption every 1 hour to the node of Group 1. The maximum interval to report its instant power consumption is 45 hours (5s*32767/3600=45hr). Default value is 1 hour.

**7-2 KWH Meter Report Period:**

If the setting is configured for 1hour (set value =6), the PAN08 will report its Accumulated Power Consumption (KW/h) every 1 hour to the node of correspond Group. The maximum interval to report its Accumulated Power Consumption (KW/h) is 227.55 days (10min*32767/1440=227.55 days). Default value=1 hour.

**7-3 Threshold of current for Load Caution**

This is a warning when the current of load over the preset threshold value, if the setting value is 500, when the load current of Relay1 over this value, PAN08 will send current meter report to warn the Group1 node, the Range of the setting value is from 10 to 500, and the default value is 500.

**7-4 Threshold of KWh for Load Caution**

This is a warning when the KWh of load over the preset threshold value, If the setting value is 10000, when the Accumulated Power Consumption of Relay1 or Relay2 over this value, PAN08 will send KWh Meter Report command to the node of correspond Group, minimum value is 1KWh and default value is 10000 kWh

**7-5 External switch type**

7-5-1 One Push Button：

When the configuration setting is One Push Button, only S1 input will be valid. The control moving commands can be accepted in this switch type while the shutter is moving. In this switch type, the inclusion/exclusion/reset/association function can also be fulfilled by pressing S1 just like the operation of include button.

When S1 is short pressed, the shutter will move up toward TOP(0x63). While in this moving S1 is short pressed again, the shutter will stop moving. A third short pressing of S1 will move the shutter down toward BOTTOM(0x00). While in this moving S1 is short pressed again, the shutter will stop moving. And so on… Inverting direction and stopping.

7-5-2 Two Push Button： (The default setting is Two Push Button (2))

If this setting is configured as Two Push Button, S1 and S2 input will be valid, but will not accept pressing S1and S2 at the same time. In this switch type, the inclusion/exclusion/reset/association function can also be fulfilled by pressing S1 or S2 just like the operation of include button.

When S1 is pressed and hold more than 1.5 seconds, the shutter will move up toward TOP(0x63), and the shutter will stop moving when S1 is released. When S2 is pressed and hold more than 1.5 seconds, the shutter will move down toward BOTTOM(0x00), and the shutter will stop moving when S2 is released.

When S1 is short pressed, the shutter will move up toward TOP(0x63). While in this moving short pressed S1 again, the shutter just keep moving up toward TOP(0x63). The easy way to stop this moving is short pressing S2. When S2 is short pressed, the shutter will move down toward BOTTON(0x00). While in this moving short pressed S2 again, the shutter just keep moving down toward BOTTON(0x00). The easy way to stop this moving is short pressing S1.

**When in Two Push Button switch type, S1 or S2 are pressed and not released, and PAN08 receive any control moving command from Z-Wave RF (Ex. BASIC_SET、BINARY_SWITCH_SET、MULTILEVEL_SWITCH_SET、MULTILEVEL_SWITCH_START_LEVEL_CHANGE or MULTILEVEL_SWITCH_STOP_LEVEL_CHANGE or SCENE_ACTIVATION_SET), PAN08 won't do any change in position but report alarm to Group1 (Alarm_Type=1, Alarm_level =0xFF), this indicate**

**that the S1 or S2 not been release.**

**ATT. : For avoid misunderstanding that RF command dose not work, it is recommended to check the status of S1 and S2.**

### 7-6 Level Report mode

Mode 1 : In 5 seconds period after controlled by a moving command, it will report the destination level when received request command. Out of the 5 seconds period, it will report the actual level of the shutter when received request command.

Mode 2 : Whenever the shutter move pass a 10 percent level, it will auto report the level to Group 1 node.

## 8 Command Classes

The Switch supports Command Classes including…

* COMMAND_CLASS_ZWAVEPLUS_INFO
* COMMAND_CLASS_VERSION_V2
* COMMAND_CLASS_MANUFACTURER_SPECIFIC_V2
* COMMAND_CLASS_DEVICE_RESET_LOCALLY
* COMMAND_CLASS_ASSOCIATION_V2
* COMMAND_CLASS_ASSOCIATION_GRP_INFO
* COMMAND_CLASS_POWERLEVEL
* COMMAND_CLASS_SWITCH_BINARY
* COMMAND_CLASS_BASIC
* COMMAND_CLASS_SWITCH_MULTILEVEL_V3
* COMMAND_CLASS_CONFIGURATION
* COMMAND_CLASS_ALARM
* COMMAND_CLASS_METER_V3
* COMMAND_CLASS_SCENE_ACTIVATION
* COMMAND_CLASS_SCENE_ACTUATOR_CONF
* COMMAND_CLASS_FIRMWARE_UPDATE_MD_V2

## Troubleshooting

| Symptom | Cause of Failure | Recommendation |
|---|---|---|
| The PAN08 not working and LED off | 1. The PAN08 is not connect to the Main power<br>2. The PAN08 break down | 1. Check power connections<br>2. Don't open up the PAN08 and send it for repair. |
| The shutter move direction is reverse | Wrong connection of NC and NO to the motor | Swap the NC NO connection |
| PAN08 LED light work fine But can not control | 1. No association setting<br>2. Same frequency interference<br>3. S1 or S2 are pressed in Two Push Button switch type, PAN08 would not accept RF command. | 1. Carry out association<br>2. Wait for a while to re-try<br>3. Release S1 and S2 |

## Specification

| | |
|---|---|
| Operating Voltage | 100 ~240VAC |
| Maximum Load | Resistive load 5A max |
| Range | Minimum 30 m in door 100m outdoor line of sight |

| | |
|---|---|
| Operating Temperature | 0°C ~ 40°C |
| Frequency Range | PAN08-1: 868.40MHz; 869.85MHz(EU) /<br>PAN08-2: 908.40MHz; 916.00MHz(USA/Canada) /<br>PAN08-3: 922.5MHz/ 923.9MHz/ 926.3MHz (Taiwan/JP) |

** Specifications are subject to change and improvement without notice.

**Warning:**

1.Plug out to disconnect from power supply; Do not plug in line.

2. Do not exceed the max rating

## Disposal

| | |
|---|---|
| | This marking indicates that this product should not be disposed with other household wastes throughout the EU. To prevent possible harm to the environment or human health from uncontrolled waste disposal, recycle it responsibly to promote the sustainable reuse of material resources. To return your used device, please use the return and collection systems or contact the retailer where the product was purchased. They can take this product for environmental safe recycling. |

## FCC Interference Statement

This equipment has been tested and found to comply with the limits for a Class B digital device, pursuant to Part 15 of the FCC Rules. These limits are designed to provide reasonable protection against harmful interference in a residential installation. This equipment generates, uses and can radiate radio frequency energy and, if not installed and used in accordance with the instructions, may cause harmful interference to radio communications. However, there is no guarantee that interference will not occur in a particular installation. If this equipment does cause harmful interference to radio or television reception, which can be determined by turning the equipment off and on, the user is encouraged to try to correct the interference by one of the following measures:

- Reorient or relocate the receiving antenna.
- Increase the separation between the equipment and receiver.
- Connect the equipment into an outlet on a circuit different from that to which the receiver is connected.
- Consult the dealer or an experienced radio/TV technician for help.

This device complies with Part 15 of the FCC Rules. Operation is subject to the following two conditions:

(1) This device may not cause harmful interference, and

(2) This device must accept any interference received, including interference that may cause undesired operation.

FCC Caution: Any changes or modifications not expressly approved by the party responsible for compliance could void the user's authority to operate this equipment.

This transmitter must not be co-located or operating in conjunction

with any other antenna or transmitter.