AEOTEC
BY AEON LABS

AEOTEC
BY AEON LABS

Nano Dimmer

View the expanded manual:
http://aeotec.com/support

IMPORTANT!

This product has been fully tested and certified to work with Z-Wave by the Z-Wave Alliance. It is crafted using Z-Wave Plus, the latest device version of Z-Wave. As such, if the product does not work with your gateway, please be sure to check with your gateway manufacturer that they have integrated this device with their gateway for full operation.

Warning

Do not dispose of electrical appliances as unsorted municipal waste, use separate collection facilities. Contact your local government for information regarding the collection systems available.

Certifications (regional):

Z-Wave and Z-Wave Plus are registered trademarks of Silicon Labs and its subsidiaries in the United States and other countries

FCC ID: XBAFT111

Intertek
4005555

Version: 501011100001-AA www.aeotec.com

① Aeotec by Aeon Labs Nano Dimmer.

Aeotec Nano Dimmer is a Z-Wave smart dimmer device specifically used to enable Z-Wave command and control (on/off/dim) of any in-wall switches. It can report immediate wattage consumption or kWh energy usage over a period of time. In the event of power failure, non-volatile memory retains all programmed information relating to the unit's operating status.

It can connect to 2 external manual switches to control the load ON/OFF independently. Its surface has a pin socket, which can be used for connecting to the touch panel, so you can also use the touch panel to control the Nano Dimmer.

The Nano Dimmer is also a security Z-Wave plus device and supports Over The Air (OTA) feature for the products firmware upgrade.

② Familiarize yourself with your Nano Dimmer.

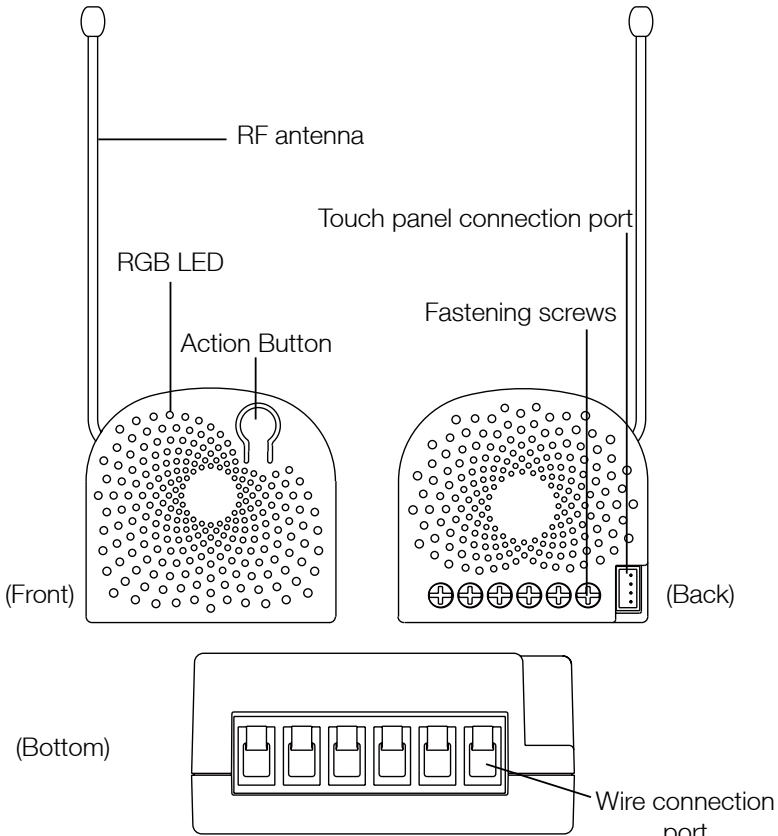

to try to correct the interference by one or more of the following measures:

- Reorient or relocate the receiving antenna.
- Increase the separation between the equipment and receiver.
- Connect the equipment into an outlet on a circuit different from that to which the receiver is connected.
- Consul the dealer or an experienced radio/TV technician for help.

UL NOTICE (For USA/Canada).

1. Install only in a UL listed junction box sized 3×2×2.75 inch (75×50×70 mm) or larger, minimum volume 14 in^3 (230 cm^3).
2. Use Copper Conductors Only.
3. “CAUTION – Risk of Electric Shock – More than one disconnect switch may be required to de-energize the equipment before servicing”.
4. “WARNING - This device shall not be used in combination with a wall switch controlling a receptacle.”

This device complies with Part 15 of the FCC Rules. Operation is subject to the following two conditions:

1. This device may not cause harmful interference, and
2. This device must accept any interference received, including interference that may cause undesired operation. This equipment has been tested and found to comply with the limits for a Class B digital device, pursuant to part 15 of the FCC Rules. These limits are designed to provide reasonable protection against harmful interference in a residential installation. This equipment generates, uses and can radiate radio frequency energy and, if not installed and used in accordance with the instructions, may cause harmful interference to radio communications. However, there is no guarantee that interference will not occur in a particular installation. If this equipment does cause harmful interference to radio or television reception, which can be determined by turning the equipment off and on, the user is encouraged

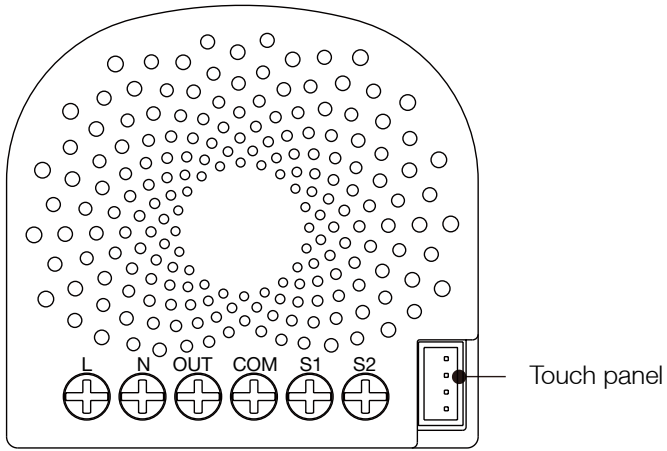

Notes for the wire connection ports:

L – Power input for live
N – Power input for neutral
OUT – Output for load
COM – Common port for all External switches (S1 and S2)
S1 – External switch 1 control for load
S2 – External switch 2 control for load

Install the Nano Dimmer.

Important: A licensed electrician with knowledge and understanding electrician systems and electrical safety should complete the electrical installation.

1. Shut off the main circuit breaker of your home for safety during the installation and ensure the wires are not short circuited during the installation which will cause damage to the Nano Dimmer.

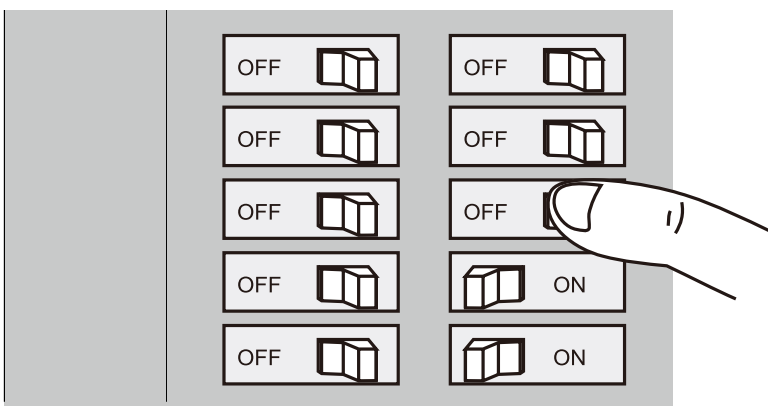

Note: Your home's main circuit breaker must support the overload protection for safety.

WITHIN THIRTY (30) DAYS FROM AEON LABS' DELIVERY, OR THE DATE FIXED FOR DELIVERY IN THE EVENT OF NONDELIVERY. THE INDEMNITY AND WARRANTY IN ABOVE ARE EXCLUSIVE AND IN LIEU OF ALL OTHER INDEMNITIES OR WARRANTIES, WHETHER EXPRESS OR IMPLIED, INCLUDING THE IMPLIED WARRANTIES OF MERCHANTABILITY AND FITNESS FOR A PARTICULAR PURPOSE.

FCC NOTICE (for USA)

THE MANUFACTURER IS NOT RESPONSIBLE FOR ANY RADIO OR TV INTERFERENCE CAUSED BY UNAUTHORIZED MODIFICATIONS TO THIS EQUIPMENT.SUCH MODIFICATIONS COULD VOID THE USER'S AUTHORITY TO OPERATE THE EQUIPMENT.

STORE INDOORS WHEN NOT IN USE. SUITABLE FOR DRY LOCATIONS. DO NOT IMMERSE IN WATER. NOT FOR USE WHERE DIRECTLY EXPOSED TO WATER.

DAMAGES FOR LOSS OF PROFITS, REVENUE, OR USE INCURRED BYCUSTOMER, COMPANY OR ANY THIRD PARTY, WHETHER IN AN ACTION IN CONTRACT, OR TORT, OR OTHERWISE EVENIF ADVISED OF THE POSSIBILITY OF SUCH DAMAGES. AEON LABS' LIABILITY AND CUSTOMER'S EXCLUSIVE REMEDY FOR ANY CAUSE OF ACTION ARISING IN CONNECTION WITH THIS AGREEMENT OR THE SALE OR USE OF THE PRODUCTS, WHETHER BASED ON NEGLIGENCE, STRICT LIABILITY, BREACH OF WARRANTY, BREACH OF AGREEMENT, OR EQUITABLE PRINCIPLES, IS EXPRESSLY LIMITED TO, AT AEON LABS' OPTION, REPLACEMENT OF, OR REPAYMENT OF THE PURCHASE PRICE FOR THAT PORTION OF PRODUCTS WITHRESPECT TO WHICH DAMAGES ARE CLAIMED. ALL CLAIMS OF ANY KIND ARISING IN CONNECTION WITH THIS AGREEMENT OR THE SALE OR USE OF PRODUCTS SHALL BE DEEMED WAIVED UNLESS MADE IN WRITING

2. Preparing connection wires

   14 AWG or 12 AWG power wires for Input/ Output.

   18 AWG copper wires for external manual switch.

   Use the wire stripper cut the metallic part of the connection wire and make sure the length of the metallic part is about 5mm.

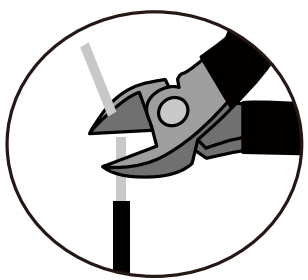

Cut wire if neccessary

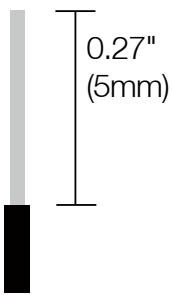

Strip Gage (measure barehere)

Note: All connection wires need to be flexible cable.

Wiring diagram of 3-Wire system.

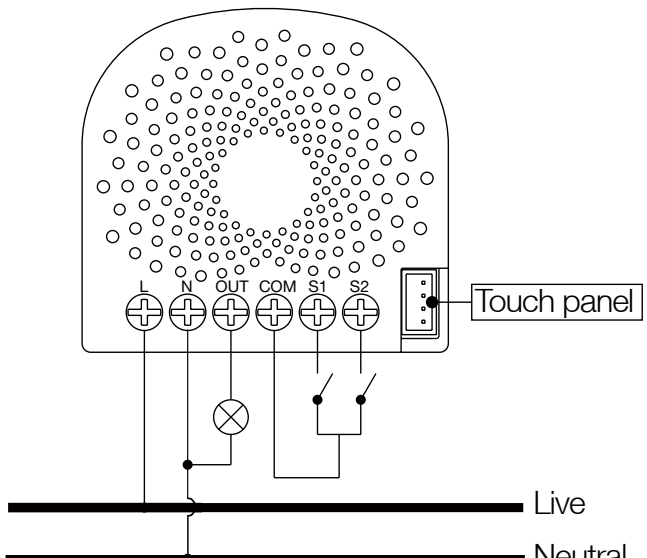

Wiring diagram of 2-Wire system.

all demands, claims, actions, causes of action, proceedings, suits, assessments, losses, damages, liabilities, settlements, judgments, fines, penalties, interest, costs and expenses (including fees and disbursements of counsel) of every kind (i) based upon personal injury or death or injury to property to the extent any of the foregoing is proximately caused either by a defective product (including strict liability in tort) or by the negligent or willful acts or omissions of Customer or its officers, employees, subcontractors or agents, and/or (ii) arising from or relating to any actual or alleged infringement or misappropriation of any patent, trademark, mask work, copyright, trade secret or any actual or alleged violation of any other intellectual property rights arising from or in connection with the products, except to the extent that such infringement exists as a result of Aeon Labs' manufacturing processes.

IN NO EVENT SHALL AEON LABS BE LIABLE FOR ANY INDIRECT, INCIDENTAL, PUNITIVE, SPECIAL OR CONSEQUENTIAL DAMAGES, OR

damage, negligence, electrical power problems, or modification to the Products or its components.

Aeon Labs does not authorize any person or party to assume or create for it any other obligation or liability in connection with the Products except as set forth herein. Aeon Labs will pass on to Company all manufacturers' Material warranties to the extent that they are transferable, but will not independently warrant any Material. Company will assist Customer with all warranty, repair, return and technical support needs, Company must prepay shipping and transportation charges for returned Products, and insure the shipment or accept the risk of loss or damage during such shipment and transportation. Aeon Labs will ship the repaired or replacement products to Company freight prepaid.Customer and Company shall indemnify, defend, and hold Aeon Labs and Aeon Labs' affiliates, shareholders, directors, officers, employees, contractors, agents and other representatives harmless from

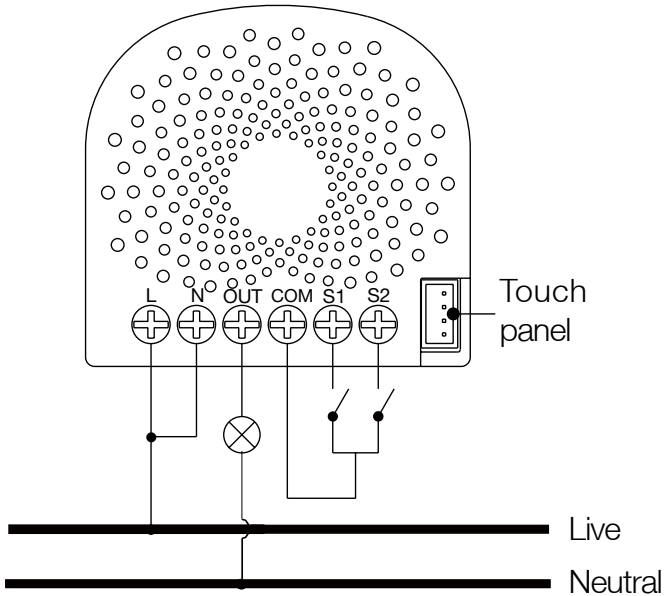

Note: The "N" terminal should be connected to the "L" terminal when the Nano Dimmer is installed by 2-Wire system.

You may need to connect a small power load (E.g. a LED light or a compact fluorescent lamp) to be controlled. In this case, the Nano Dimmer may not get enough power from the AC power supply, so a

bypass can be added to act as a dummy load to keep your Nano Dimmer get enough power from the power supply. It can also keep your light from flickering when diming off the light.

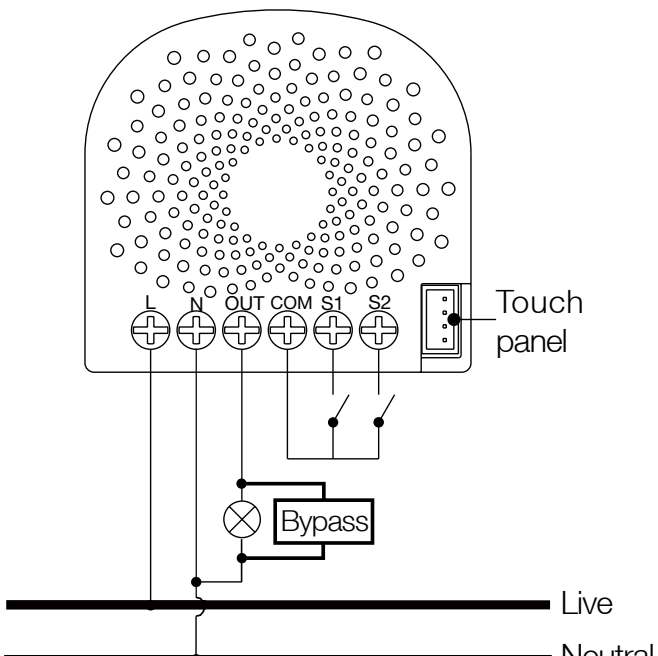

and the operating manual supplied. Warranty claims must be made to the Company who you have purchased from in writing within thirty (30) days of the manifestation of a problem.
Aeon Labs' sole obligation under the foregoing warranty is, at Aeon Labs' option, to repair, replace or correct any such defect that was present at the time of delivery, or to remove the Products and to refund the purchase price to Company.

The Warranty Period begins on the date the Products is delivered and continues for 12 months. Any repairs under this warranty must be conducted by an authorized Aeon Labs service representative and under Aeon Labs' RMA policy. Any repairs conducted by unauthorized persons shall void this warranty.

Excluded from the warranty are problems due to accidents, acts of God, civil or military authority, civil disturbance, war, strikes, fires, other catastrophes, misuse, misapplication, storage

subsequent to your products' warranty, please get in touch with our support team via http://aeotec.com/support. The Company you bought this product from has also guaranteed to assist you with any of your support needs, and you can also contact them for accordingly.

This guarantee made by the company who you purchased the product from includes the transfer of Aeon Labs' full warranty to that Company. They've guaranteed that they'll be able to assist you, the Customer, with all technical support and repair needs on our behalf.

Aeon Labs warrants to the original purchaser of Products, that is the Company who you have purchased from, that for the Warranty Period (as defined below), the Products will be free from material defects in materials and workmanship. The foregoing warranty is subject to the proper installation, operation and maintenance of the Products in accordance with installation instructions

or

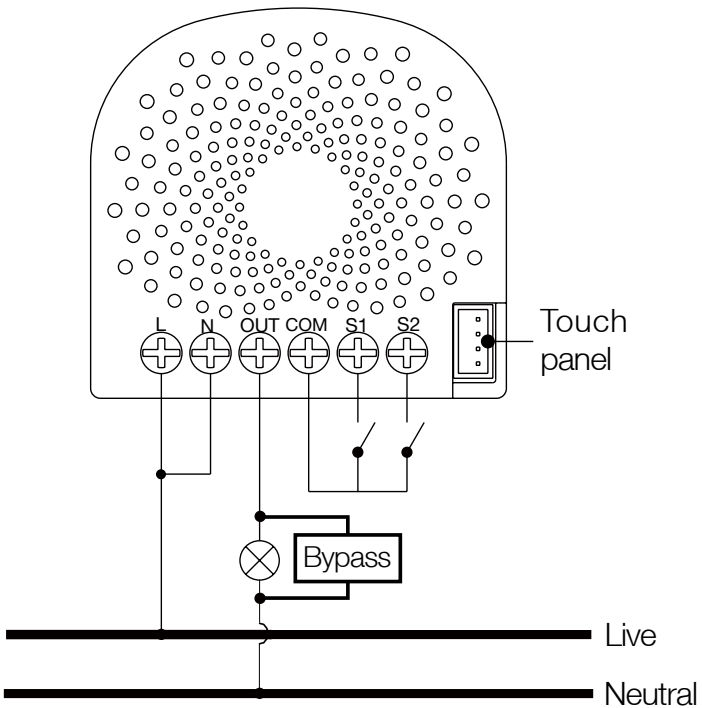

All above wiring diagrams show that the Nano Dimmer uses 2-Way or momentary button switches as the external manual switch.

The below diagram will show you that the Nano Dimmer uses the SPDT (Single-Pole Double-Throw) switches as the external manual switch.

Wiring diagram of SPDT as the external manual switch.

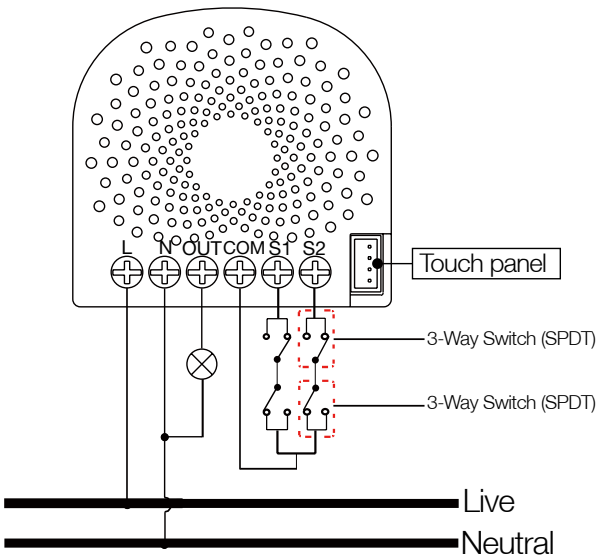

Since the S1 port and S2 port can be used to control the load separately, you can choose to connect the SPDT switches to the S1 or S2.

Model number: ZW111
Power input: 120VAC to 240VAC, 50Hz/ 60Hz.
Rated output: Max 1.2A.
Max standby power: <0.8W.
Power measurement accuracy: ±3W.
Operating temperature: 0℃ to 40℃ /32 ℉ to 104 ℉ .
Relative humidity: 8% to 80%.
Operating distance: Up to 492 feet/150 meters outdoors.
Supported Loads:

Control ability	Supported load types
With dimming function (On/Off/ Dim control)	Incandescent bulbs, halogen bulbs with or without electronic transformer, dimmable LED bulbs, dimmable compact fluorescent lamps.
Without dimming function (On/Off control)	Non-dimmable bulbs (Compact fluorescent lamps with electronic rectifier, fluorescent tube lamps with electronic ballast, LED bulbs).

⑦ Warranty.

If you are in need of any technical support during or

mode.

2. Press the Action Button 2 times within 1 second on the Nano Dimmer, the blue LED (secure indication) will blink to indicate the Nano Dimmer is entering into secure pairing mode.
3. If the Nano Dimmer has been successfully added to your Z-Wave network, its RGB LED will be solid. If the pairing was unsuccessful, the red LED will be on for 2 seconds and then remain a colourful gradient, repeat the instructions above from step 1.

Reset your Nano Dimmer.

If at some stage, your primary controller is missing or inoperable, you may wish to reset all of your Nano Dimmer's settings to their factory defaults. To do this, press and hold the Action Button for 20 seconds and then release it. Your Nano Dimmer will now be reset to its original settings, and the green LED will be solid for 2 seconds and then remain the colourful gradient status as a confirmation.

⑥ Technical specifications.

3. Install Nano Dimmer to the gang box.
   a. Live/Hot wire connection: Connect the Live/Hot wire to the "L" terminal on the Nano Dimmer.
   b. Neutral wire connection: Connect the Neutral wire to the "N" terminal on the Nano Dimmer.
   c. Load wire connection: Connect the Load wire to the "OUT" on the Nano Dimmer.
   d. External/manual Switch connection: Connect 2 18AWG wires to the "S1" and "S2" on the Nano Dimmer.
   e. External/manual Switch connection: Connect 2 18AWG wires form the 2 terminals on the External/manual Switch to the "COM" on the Nano Dimmer.

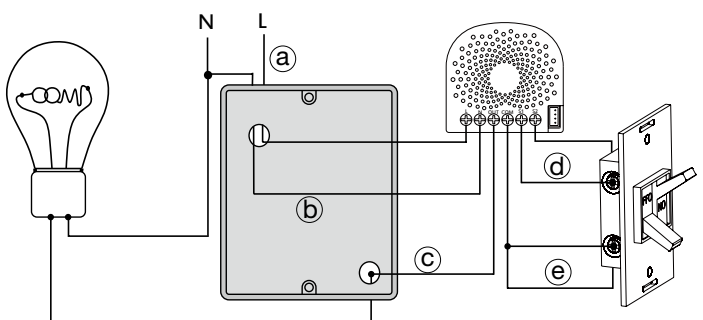

Note: The above physical connection diagram is for 3-Wire system, the below diagram would be for the 2-Wire system.

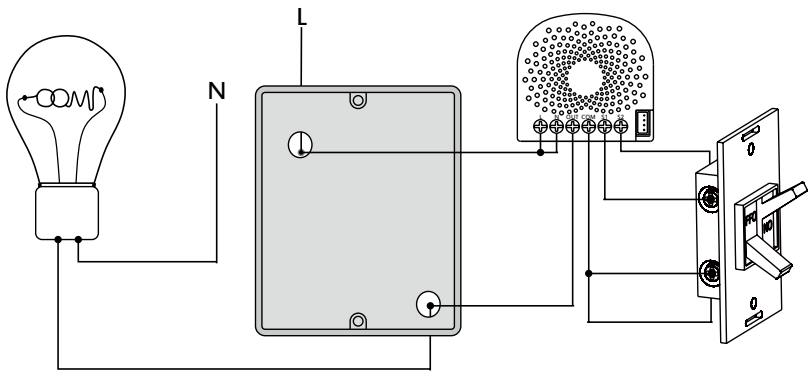

In 2-Wire system, since the power input terminals of Nano Dimmer just need to connect one power wire, so the terminal of “N” on Nano Dimmer should connect to the “L” on the Nano Dimmer.

4. Mounting the gang box.
   a. Position all wires to provide room for the device. Place the Nano Dimmer inside the gang box towards the back of the box.
   b. Position the antenna towards the back of the

operation manual for these control points for specific instructions on monitoring the Nano Dimmer.

Security or Non-security feature of your Nano Dimmer in Z-Wave network.

Including Nano Dimmer as a non-secure device:

If you want your Nano Dimmer as a non-secure device in your Z-Wave network, press the Action Button once on Nano Dimmer when you pair it to your gateway. If inclusion is successful, the green LED will be on for 2 seconds, and then return to a solid indication. If inclusion is unsuccessful, the red LED will be on for 2 seconds and then return to a colourful gradient.

Including Nano Dimmer as a secure device:

In order to take full advantage of the Nano Dimmer, you will want your Nano Dimmer as a security device that uses encrypted messages to communicate in your Z-wave network. A security enabled controller/ gateway (or Z-Wave Plus controller) is required.

1. Set your Z-Wave Plus controller into pairing

panel. When you have already connected it to the Nano Dimmer, you will be possible to control the Nano Dimmer through the Touch panel directly.

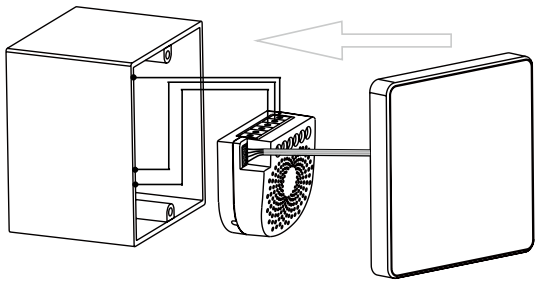

Monitoring Energy Consumption.

The Aeotec Nano Dimmer can report wattage energy usage or kWh energy usage to a Z-Wave control point when requested. If this function is supported by the control points, the energy consumption will be displayed in the user interface of the control points. (The specific Z-Wave commands supporting energy monitoring are the Meter Command Class. Automatic reports are sent to association group 1, which is setup via the Association Command Class.) Please consult the

box, away from all other wiring.

c. Reinstall the Nano Dimmer to the gang box.

d. Reinstall the cover onto the gang box.

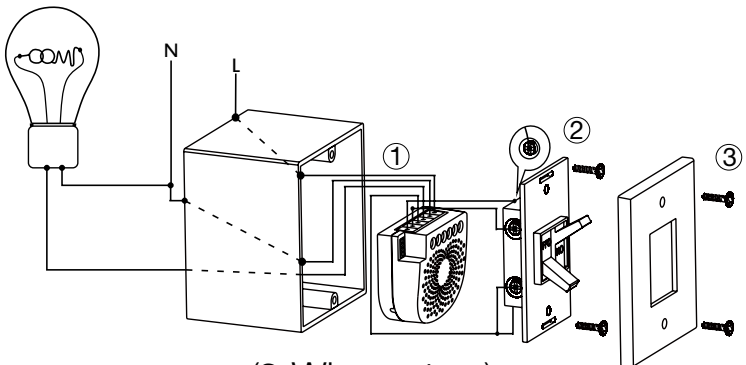

(3-Wire system)

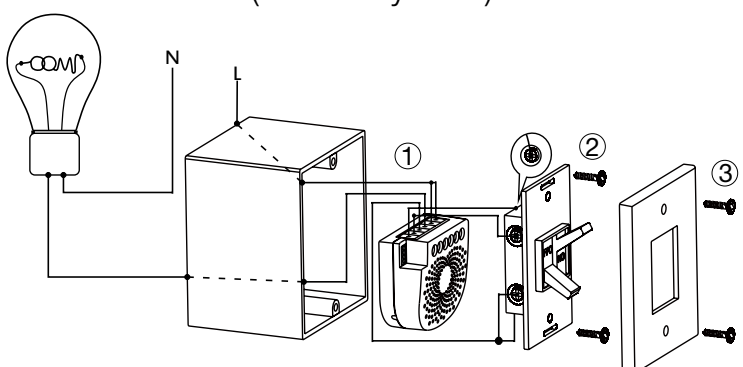

(2-Wire system)

Note:

1). The gang box should be sized 3×2×2.75 inch/ 75×50×70 mm or larger, minimum volume 14 in^3 / 230cm^3.
2). Use flexible copper conductors only.
3). If a Bypass installation is needed, the Bypass should be in parallel with the bulb load, see below:

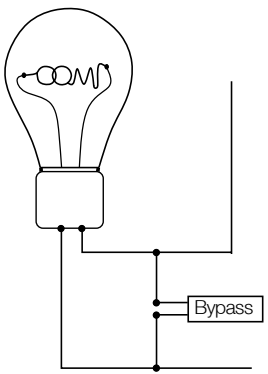

Warning: The main circuit breaker or fuse must be shut off during the Bypass installation or bulb change.

5. Restore Power.

Restore power at the main circuit breaker or fuse.

The Nano Dimmer can be controlled via 2-state (flip/flop) external/manual switch, momentary push button or the 3-way switch. To automatically detect and set the mode to the appropriate type of manual switch wired into Nano Dimmer, toggle the button on the manual switch once and wait 2 seconds for the Nano Dimmer to detect the type of manual switch.

You can also set the external switch mode through Configuration Command Class.

Parameter 120 [1 byte dec] is the parameter that will set one of the 3 different modes. If you set this configuration to:

(0) Enter automatic identification mode
(1) Momentary push button mode
(2) 3-way switch mode
(3) 2-state switch mode

Touch panel control.

As you can see that the Nano Dimmer's surface has a pin port, this port is used to connect the Touch

Your Nano Dimmer can be removed from your Z-Wave network at any time. You'll need to use your Z-Wave network's main controller. To set your Z-Wave controller/gateway into removal mode, please refer to the respective section within your controller instruction manual.

1. Set your Z-Wave controller into removal mode.
2. Press the Action Button on the Nano Dimmer or toggle the external manual switch 2 times in fast succession.
3. If the Nano Dimmer has been successfully removed from your Z-Wave network, its RGB LED will remain colourful gradient. If the removal was unsuccessful, the RGB LED will still be solid (following the state of the output load), repeat the instructions above from step 1.

⑤ Advanced functions.

Changing mode on the External Switch/Button Control.

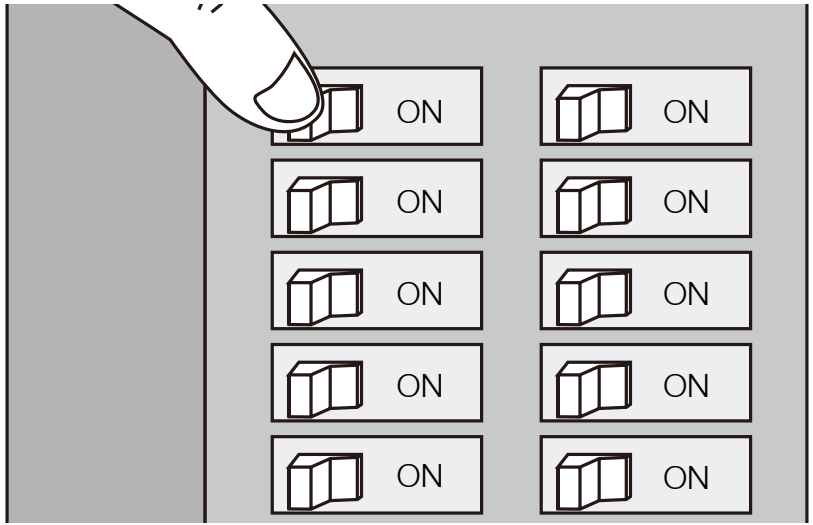

When the Nano Dimmer is powered on, it will automatically identify the connected load type and then match it.

③ Quick start.

Adding your Nano Dimmer to a Z-Wave network.

After your Nano Dimmer is installed and powered on, you are now able to manually control the Nano

Dimmer to turn it On/Off/Dim directly via pressing your Nano Dimmer's Action Button, it is time to add your Nano Dimmer to the Z-Wave network. To set your Z-Wave gateway/controller into pairing mode, please refer to the respective section within your controller instruction manual.

1. Set your Z-Wave controller into pairing mode.
2. Press the Action Button on the Nano Dimmer or toggle the external manual switch once, the green LED (non-secure indication) will blink to indicate the Nano Dimmer is entering into pairing mode.
3. If the Nano Dimmer has been successfully added to your Z-Wave network, its RGB LED will be solid. If the pairing was unsuccessful, the red LED will be on for 2 seconds and then remain a colourful gradient, repeat the instructions above from step 1.

With your Nano Dimmer now working as a part of your smart home, you'll be able to configure it from your home control software/phone application.

Please refer to your software's user guide for further instructions on configuring Nano Dimmer to your needs.

The colour of RGB LED will change according to the output load power level:

Version	LED indication	Output (W)
US	Green	[0W, 48W)
	Yellow	[48W, 96W)
	Red	[96W, 144W)
AU	Green	[0W, 92W)
	Yellow	[92W, 184W)
	Red	[184W, 276W)
EU	Green	[0W, 92W)
	Yellow	[92W, 184W)
	Red	[184W, 276W)

④ Removing Nano Dimmer from a Z-Wave network.

Association information

Nano Dimmer supports 4 association groups and Max 5 nodes for every group.

Association Group	Nodes	Send Mode	Send commands
Group 1	0	N/A	N/A
	[1,5]	Single Cast	When the load state of Nano Dimmer (on/off/dim the load) is changed: 1. Set Configuration parameter 80 to 0: Send Nothing (Default). 2. Set Configuration parameter 80 to 1: Send Hail CC. 3. Set Configuration parameter 80 to 2: Send the Basic Report. 4. Set Configuration parameter 80 to 3: Send Hail CC when using the manual switch to change the load state. 5. Set Configuration parameter 80 to 4: Send Switch Multilevel Report.
Group 2	0	N/A	N/A
	[1,5]	Single Cast	Forward the Basic Set, Switch Binary Set, Switch Multilevel Start Level Change, Switch Multilevel Stop Level Change, Switch Multilevel Set, Switch all to the associated nodes in Group 2 when the Nano Dimmer receives the Basic Set, Switch Binary Set, Switch Multilevel Start Level Change, Switch Multilevel Stop Level Change, Switch Multilevel Set, Switch all commands from main controller. (E.g. Send/forward Basic Set to control the other nodes in association Group 2)
Group 3	0	N/A	N/A
	[1,5]	Single Cast	Send Basic Set (configured by parameter 0x51) to the associated nodes in Group 3 when the external switch S1 is operated
Group 4	0	N/A	N/A
	[1,5]	Single Cast	Send Basic Set (configured by parameter 0x52) to the associated nodes in Group 4 when the external switch S2 is operated.

Configuration parameters information

Parameter Number Hex / Decimal	Description	Default Value	Size
0x03 (3)	Current Overload Protection. Output Load will be turned off automatically after 30 seconds and if the current overrun 1.5A. 0 = Disabled, 1 = Enabled	1	1
0x04 (4)	Overheat protection. Output Load will be turned off automatically after 30 seconds and if the temperature of product inside exceeds 100 ℃. 0 = Disabled, 1 = Enabled	0	1
0x14 (20)	Configure the output status after re-power on it. 0 = Last status, 1 = Always on, 2 = Always off	0	1
0x50 (80)	To set which notification would be sent to the associated devices (Group 1) when the state of Nano Dimmer's load is changed. 0 = Send Nothing, 1 = Send Hail CC, 2 = Send Basic CC report. 3 = Send Multilevel Switch report 4 = Send Hail CC when using the manual switch to change the load state.	0	1
0x51 (81)	To set which notification would be sent to the associated nodes in association group 3 when using the external switch 1 to switch the loads. 0 = Send Nothing 1 = Basic Set CC.	1	1
0x52 (82)	To set which notification would be sent to the associated nodes in association group 4 when using the external switch 2 to switch the loads. 0 = Send Nothing 1 = Basic Set CC.	1	1
0x55 (85)	State appointment 1: Set the ON time of output load. Value1 = 0, disable or =non zero, enable (day, bit0 - bit6 represent Mon to Sun). Value2 = ON (hour) Value3 = ON (minute) Value4 = ON (brightness level)	Value1=00 Value2=18 Value3=00 Value4=99	4
0x56 (86)	State appointment 2: Set the ON time of output load. Value1 = 0, disable or = non zero, enable (day, bit0 - bit6 represent Mon to Sun). Value2 = ON (hour) Value3 = ON (minute) Value4 = ON (brightness level)	Value1=00 Value2=23 Value3=00 Value4=00	4
0x5A (90)	Enables/disables parameter 91 and 92 below: 1 = enabled 0 = disabled.	0	1

0x5B (91)	The value here represents minimum change in wattage (in terms of wattage) for a REPORT to be sent (Valid values 0-60000).	25 (W)	2
0x5C (92)	The value here represents minimum change in wattage percent (in terms of percentage) for a REPORT to be sent (Valid values 0-100).	5 (%)	1
0x64 (100)	Set 101-103 to default.	N/A	1
0x65 (101)	Which reports need to send in Report group 1 (See flags in table below).	0x00 00 00 00	4
0x66 (102)	Which reports need to send in Report group 2 (See flags in table below).	0x00 00 00 00	4
0x67 (103)	Which reports need to send in Report group 3 (See flags in table below).	0x00 00 00 00	4
0x6E (110)	Set 111-113 to default.	N/A	1
0x6F (111)	The time interval of sending Report group 1 (Valid values 0x01-0x7FFFFFFF).	0x00 00 00 03	4
0x70 (112)	The time interval of sending Report group 2 (Valid values 0x01-0x7FFFFFFF).	0x00 00 02 58	4
0x71 (113)	The time interval of sending Report group 3 (Valid values 0x01-0x7FFFFFFF).	0x00 00 02 58	4
0x78 (120)	Configure the external switch mode for S1. 0 = Enter automatic identification mode. 1 = momentary push button mode. 2 = 3 way switch mode. 3 = 2-state switch mode. Note: When the mode is determined, this mode value will not be reset after exclusion.	0	1

0x79 (121)	Configure the external switch mode for S2. 0 = Enter automatic identification mode. 1 = momentary push button mode. 2 = 3 way switch mode. 3 = 2-state switch mode. Note: When the mode is determined, this mode value will not be reset after exclusion.	0	1
0x7A (122)	Get the state of touch panel port. 0 = the touch panel is not connected. 5 = the touch panel is connected.	0	1
0x7B (123)	Set the control destination for external switch S1 1 = control the output loads of itself. 2 = control the other nodes. 3 = control the output loads of itself and other nodes.	3	1
0x7C (124)	Set the control destination for external switchS2 1 = control the output loads of itself. 2 = control the other nodes. 3 = control the output loads of itself and other nodes.	3	1
0x7D (125)	Set the default dimming rate.	3	1
0x80 (128)	Get the current working mode 0 = unknown 1 = 2-wire mode 2 = 3-wire mode Note: 1. This parameter is a Get-only parameter. 2. When the mode is determined, this mode value will not be reset after exclusion.	0	1
0x81 (129)	Set the dimming principle 0 = Trailing edge mode 1 = Leading edge mode Note: When the mode is determined, this mode value will not be reset after exclusion.	1	1

0x82 (130)	To get what type of load the Dimmer is connected to. 0 = Unknown 1 = Resistive load 2 = Capacitive load 3 = Inductive load Note: 1. This parameter is a Get-only parameter. 2. When the load type is determined, this type value will not be reset after exclusion.	0	1
0x83 (131)	Set the min brightness level that the load can reach to. Note: When the level is determined, this level value will not be reset after exclusion.	0	1
0x84 (132)	Set the max brightness level that the load can reach to. Note: When the level is determined, this level value will not be reset after exclusion.	99	1
0xF9 (249)	Set the recognition way of load 0 = Never recognize the load when power on. 1 = Only recognize once when first power on. 2 = Recognize the load once power on.	2	1
0xFC (252)	Lock/unlock configuration parameters 0 = Unlock, 1 = Lock.	0	1
0xFF (255)	1, Value=0x55555555、Default=1、Size=4 Reset to factory default setting and removed from the z-wave network	N/A	4
	2, Value=0、Default=1、Size=1 Reset all configuration parameters to factory default setting	N/A	1

AEOTEC
BY AEON LABS