FIBARO®
HOME INTELLIGENCE

OPERATING
MANUAL

EN

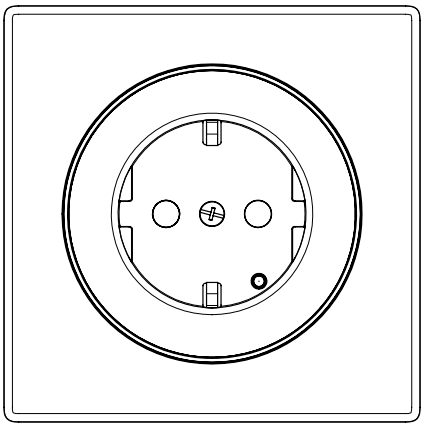

# FIBARO WALLI OUTLET

## FGWOE-011 and FGWOF-011

v1.0

# Table of contents


1: Important safety information 4
2: Description and features 5
2.1: Description 5
2.2: Main features 5
3: Specifications 6
4: Installation 7
4.1: Before installation 7
4.2: Preparing for installation 7
4.3: Electrical connection 8
4.4: First assembly 8
4.5: Changing covers 9
5: Adding to Z-Wave network 11
5.1: Adding manually 11
5.2: Adding using SmartStart 12
6: Removing from Z-Wave network 13
7: Operating the device 14
7.1: Controls 14
7.2: Button control 14
7.3: Visual indications 14
7.4: Menu 15
7.5: Resetting to factory defaults 15
8: Power and energy metering 16
9: Z-Wave range test 17
10: Configuration 18
10.1: Associations 18
10.2: Advanced parameters 18
11: Z-Wave specification 27
12: Parts compatibility 29
13: Regulations 31

# 1: Important safety information

**Read this manual before attempting to install the device!**

Failure to observe recommendations included in this manual may be dangerous or cause a violation of the law. The manufacturer, Fibar Group S.A. will not be held responsible for any loss or damage resulting from not following the instructions of operating manual.

**DANGER OF ELECTROCUTION!**

The device is designed to operate in electrical home installation. Faulty connection or use may result in fire or electric shock.

All works on the device may be performed only by a qualified and licensed electrician. Observe national regulations.

Even when the device is turned off, voltage may be present at its terminals. Any maintenance introducing changes into the configuration of connections or the load must be always performed with disabled fuse.

To avoid risk of electrical shock, do not operate the device with wet or moist hands.

**Do not modify!**

Do not modify this device in any way not included in this manual.

**Other devices**

The manufacturer, Fibar Group S.A. will not be held responsible for any damage or loss of warranty privileges for other connected devices if the connection is not compliant with their manuals.

**This product is intended for indoor use only in dry locations.**

Do not use in damp or wet locations, near a bathtub, sink, shower, swimming pool, or anywhere else where water or moisture are present.

**Not a toy!**

This product is not a toy. Keep away from children and animals!

# 2: Description and features

## 2.1: Description

**FIBARO Walli Outlet** is a smart electrical outlet designed to control electrical devices via Z-Wave network.

It measures active power and energy consumed by the controlled load.

You can install it with provided cover plate and socket cover or other compatible.

## 2.2: Main features

- Can turn ON/OFF plugged device remotely.
- Available in two versions for plug types:
  - » Type E,
  - » Type F.
- Can be used with provided covers or covers from the following product lines (see “Parts compatibility” on page 29):
  - » GIRA – System 55 (Standard 55, E2, Event, Event Clear),
  - » Legrand – Céliane,
  - » Schneider – Odace.
- Active power and energy consumption metering.
- Displays current load using multicolour LED frame (with FIBARO cover plate).
- Supports Z-Wave network Security Modes: S0 with AES-128 encryption and S2 Authenticated with PRNG-based encryption.
- Works as a Z-Wave signal repeater (all non-battery operated devices within the network will act as repeaters to increase reliability of the network).
- May be used with all devices certified with the Z-Wave Plus certificate and should be compatible with such devices produced by other manufacturers.

i The device is a Security Enabled Z-Wave Plus product and a Security Enabled Z-Wave Controller must be used in order to fully utilize the product.

# 3: Specifications

| | |
|---|---|
| Power supply | 110-230V~ 50/60 Hz |
| Rated load current | 16A – resistive loads<br>16A – incandescent loads<br>16A – inductive general purpose (cosφ = 0.75-0.8)<br>4A – pilot duty (cosφ < 0.35)<br>4A – motor<br>4A – electronic ballasts |
| Active element | micro-gap relay μ |
| Recommended external overcurrent protection | 16A type B circuit breaker |
| For installation in boxes | Ø = 60mm, depth ≥ 50mm |
| Recommended wires | cross-section area between 1.5-4.0mm$^2$, stripped 15.5-16.5mm of insulation |
| Operating temperature | 0–40°C |
| Ambient humidity | 0–90% RH without condensation |
| Radio protocol | Z-Wave (500 series chip) |
| Radio frequency | 868.4 or 869.8 MHz EU;<br>869.0 MHz RU; |
| Transmit power | EIRP max. 6dBm |
| Range | up to 50m outdoors<br>up to 40m indoors<br>(depending on terrain and building structure) |
| Dimensions (Height x Width x Depth) | FGWOE-011: 86 x 86 x 48 mm<br>FGWOF-011: 86 x 86 x 51 mm |
| Compliance with EU directives | RoHS 2011/65/EU<br>RED 2014/53/EU |

i Radio frequency of individual device must be same as your Z-Wave controller. Check information on the box or consult your dealer if you are not sure.

# 4: Installation

## 4.1: Before installation

⚠ **Connecting the device in a manner inconsistent with this manual may cause risk to health, life or material damage.**

- **Do not** power the device before fully assembling it in the mounting box,
- Connect only in accordance the diagram,
- Install only in flush mounting boxes compliant with a relevant national safety standards and with depth no less than 50mm,
- **Do not** connect devices which are not compliant with the specification or relevant safety standards.
- Make sure you have all required parts when installing with covers other than FIBARO (see “Parts compatibility” on page 29).

**Device parts:**

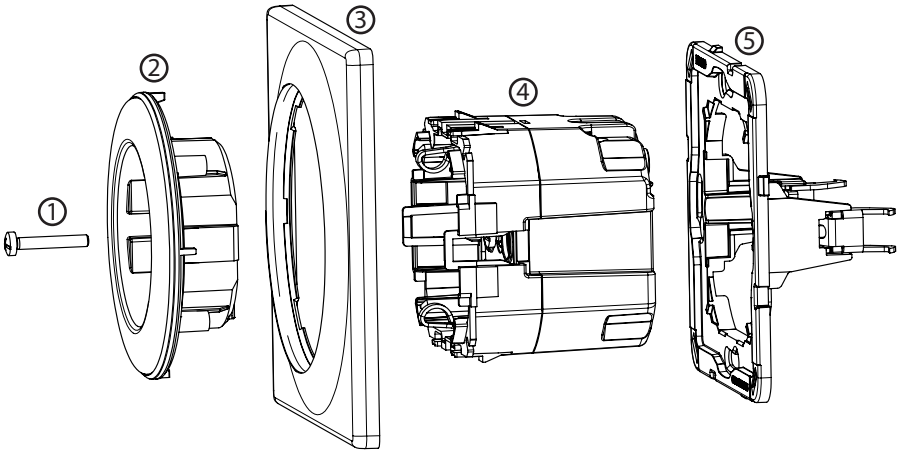


1 – screw, 2 – socket cover, 3 – cover plate, 4 – unit (device), 5 – mounting frame

**Notes for diagram:**

**N** – terminal for neutral wire

⏚ – terminal for earthing wire

**L** – terminal for live wire

## 4.2: Preparing for installation

1. Remove the screw.
2. Take off the socket cover and cover plate.
3. Prepare wires by removing 15.5-16.5mm of insulation from their ends. Groove on the back of the unit shows maximum wire length.

## 4.3: Electrical connection

1. Switch off the mains voltage (disable the fuse).
2. Connect the device according to the diagram:

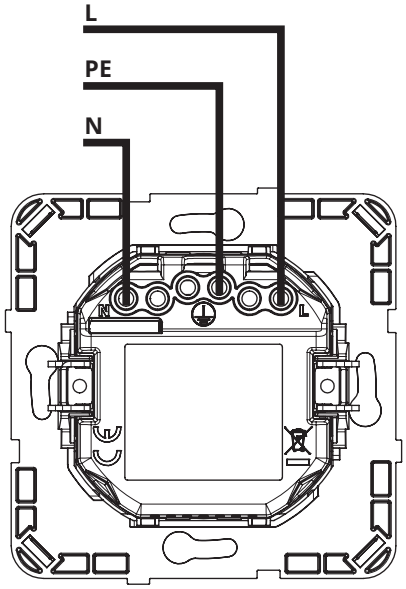


Diagram: Example connection in electrical installation

3. Verify correctness of connection.
4. Tighten the terminal screws using PH1 screwdriver.

## 4.4: First assembly

**When installing with FIBARO covers:**

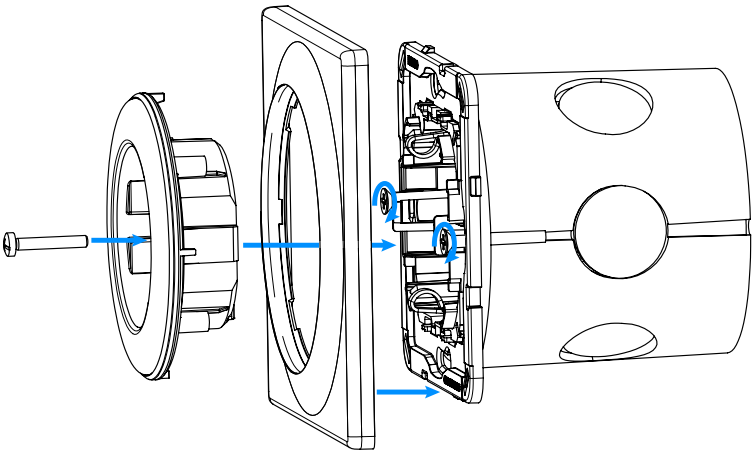

1. Insert the device with mounting frame into the mounting box and secure with mounting claws and screws.
2. Snap the cover plate to the device.
3. Snap the socket cover to the device.
4. Secure with a screw.
5. Add the device to Z-Wave network (see “Adding to Z-Wave network” on page 11)

## 4.5: Changing covers

⚠ For safety reasons the button should be used only with FIBARO cover. We recommend adding the device to Z-Wave network before changing the cover plate.

ℹ When installing with covers other than FIBARO, we recommend disabling the LED by changing parameter 13 to 0.

**When installing with GIRA covers:**

1. Switch off the mains voltage (disable the fuse).
2. Dismount the socket cover and cover plate.

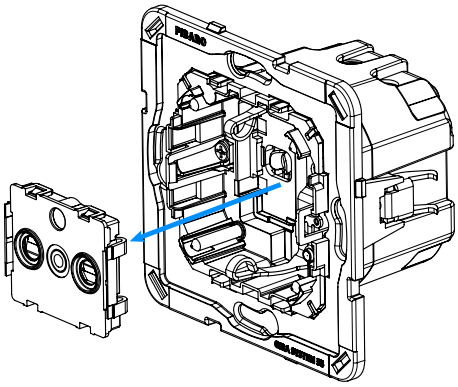

3. Dismount shutter mechanism using pliers.

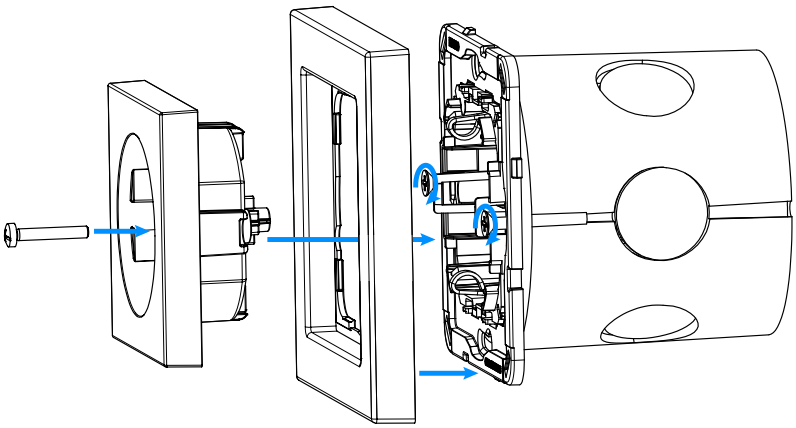

4. Snap the new cover plate to the device.
5. Snap the new socket cover to the device.
6. Secure with a screw.
7. Switch on the mains voltage.

**When installing with Legrand covers:**

1. Switch off the mains voltage (disable the fuse).
2. Dismount the device the socket cover and cover plate.
3. Take the device out of the mounting box and detach the wires.

4. Replace FIBARO mounting frame with Legrand mounting frame (FG-Wx-AS-4002).
5. Connect wires according to “Electrical connection” on page 8.

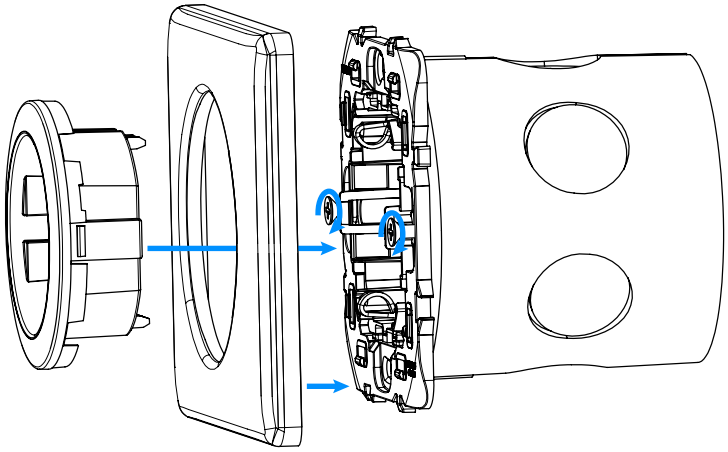

6. Insert the device with mounting frame into the mounting box and secure with mounting claws and screws.
7. Snap the new cover plate to the device.
8. Snap the new socket cover to the device.
9. Switch on the mains voltage.

**When installing with Schneider covers:**

1. Switch off the mains voltage (disable the fuse).
2. Dismount the device the socket cover and cover plate.
3. Take the device out of the mounting box and detach the wires.
4. Replace FIBARO mounting frame with Schneider mounting frame (FG-Wx-AS-4003).
5. Connect wires according to “Electrical connection” on page 8.

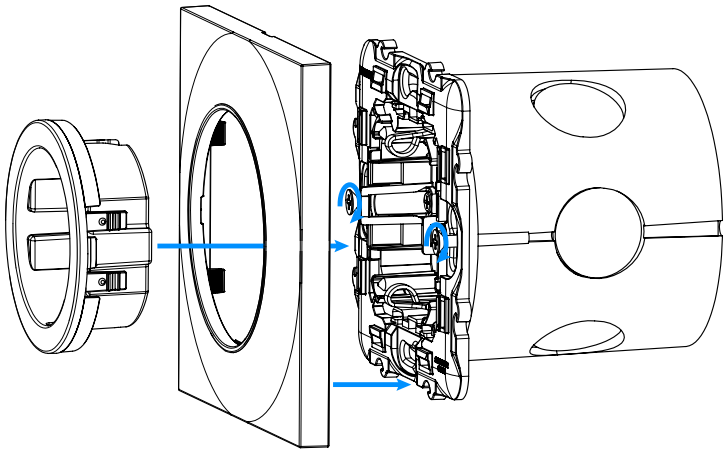

6. Insert the device with mounting frame into the mounting box and secure with mounting claws and screws.
7. Snap the new cover plate to the device.
8. Snap the new socket cover to the device.
9. Switch on the mains voltage.

# 5: Adding to Z-Wave network

**Adding (Inclusion)** – Z-Wave device learning mode, allowing to add the device to existing Z-Wave network.

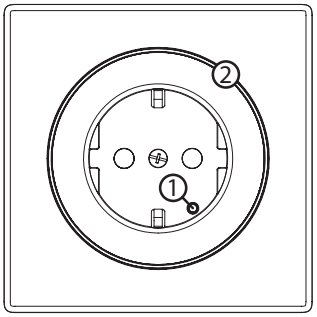


1. Button,
2. LED ring.

i Full DSK code is present only on the box, make sure to keep it or copy the code.

## 5.1: Adding manually

i Use the button only with FIBARO cover to ensure safety.

To add the device to the Z-Wave network **manually**:

1. Power the device.
2. Set the main controller in (Security/non-Security Mode) add mode (see the controller's manual).
3. Quickly, three times click the button.
4. If you are adding in Security S2 Authenticated, scan the DSK QR code or input the underlined part of the DSK (label on the bottom of the box).
5. LED will start blinking yellow, wait for the adding process to end.
6. Adding result will be confirmed by the Z-Wave controller's message and the LED frame:
   - **Green** – successful (non-secure, S0, S2 non-authenticated),
   - **Magenta** – successful (Security S2 Authenticated),
   - **Red** – not successful.

## 5.2: Adding using SmartStart

**SmartStart** enabled products can be added to SmartStart enabled Z-Wave controller by scanning the Z-Wave QR Code present on the product. SmartStart product will be added automatically within 10 minutes of being switched on in the network range.

To add the device to the Z-Wave network **using SmartStart**:

1. Set the main controller in Security S2 Authenticated add mode (see the controller's manual).
2. Scan the DSK QR code or input the underlined part of the DSK (label on the bottom of the box).
3. Power the device.
4. Wait for the adding process to start (up to few minutes), which is signalled with yellow LED blinking.
5. Adding result will be confirmed by the Z-Wave controller's message and the LED frame:
   - **Green** – successful (non-secure, S0, S2 non-authenticated),
   - **Magenta** – successful (Security S2 Authenticated),
   - **Red** – not successful.

   i In case of problems with adding the device, please reset the device and repeat the adding procedure.

# 6: Removing from Z-Wave network

Use the button only with FIBARO cover to ensure safety.

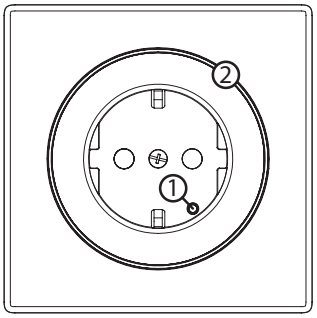


1. Button,
2. LED ring.

**Removing (Exclusion)** – Z-Wave device learning mode, allowing to remove the device from existing Z-Wave network. Removing also results in resetting the device to factory defaults.

To **remove** the device from the Z-Wave network:

1. Power the device.
2. Set the main controller into remove mode (see the controller's manual).
3. Quickly, three times click the button.
4. LED will start blinking yellow, wait for the removing process to end.
5. Successful removing will be confirmed by the Z-Wave controller's message and red LED colour.

# 7: Operating the device

## 7.1: Controls

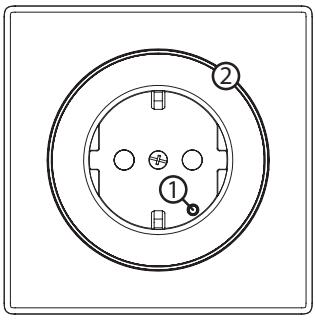


1. Button,
2. LED ring.

Use the button only with FIBARO cover to ensure safety.

## 7.2: Button control

- 1xClick – change to the opposite state (ON/OFF),
- 3xClick – start learn mode to add/remove to/from Z-Wave network,
- Press and hold – enter the menu.

## 7.3: Visual indications

The built-in LED light shows current device status.

**After powering the device:**

- Green – device added to a Z-Wave network (non-secure, S0, S2 non-authenticated),
- Magenta – device added to a Z-Wave network (Security S2 Authenticated),
- Red – device not added to a Z-Wave network.

**State of the device:**

- Colour depending on current load – device turned ON (by default).

**Update:**

- Blinking cyan – update in progress,
- Green – update successful,
- Red – update not successful.

**Menu:**

- Blinking green – entering the menu (added as non-secure, S0, S2 non-authenticated),

- Blinking magenta – entering the menu (added as Security S2 Authenticated),
- Blinking red – entering the menu (not added to a Z-Wave network),
- Green – reset energy consumption memory,
- Magenta – start Z-Wave range test,
- Yellow – reset to factory defaults,

## 7.4: Menu

**Menu** allows to perform Z-Wave network actions. In order to use the menu:

1. Press and hold the button to enter the menu, device blinks to signal adding status (see 7.3: Visual indications).
2. Release the button when device signals desired position with colour:
   - **GREEN** – reset energy consumption memory
   - **MAGENTA** – start Z-Wave range test
   - **YELLOW** – reset to factory defaults
3. Quickly click the button to confirm.

## 7.5: Resetting to factory defaults

Reset procedure allows to restore the device back to its factory settings, which means all information about the Z-Wave controller and user configuration will be deleted. Resetting to factory defaults does not reset energy consumption memory.

> i Resetting the device is not the recommended way of removing the device from the Z-Wave network. Use reset procedure only if the primary controller is missing or inoperable. Certain device removal can be achieved by the procedure of removing described.

> i Use the button only with FIBARO cover to ensure safety.

1. Press and hold the button to enter the menu.
2. Release the button when the device glows yellow.
3. Quickly click the button to confirm.
4. Device will blink yellow to confirm.
5. After a few seconds the device will be restarted, which is signalled with red LED colour.

# 8: Power and energy metering

The device allows for the active power and energy consumption monitoring. Data is sent to the main Z-Wave controller, e.g. Home Center.

Measuring is carried out by the most advanced microcontroller technology, assuring maximum accuracy and precision (+/- 1% for loads greater than 5W).

**Electric active power** – power that energy receiver is changing into a work or a heat. The unit of active power is Watt [W].

> i Power measurement can contain mains voltage fluctuations within +/- 10%.

**Electric energy** – energy consumed by a device through a time period. Consumers of electricity in households are billed by suppliers on the basis of active power used in given unit of time. Most commonly measured in kilowatt-hour [kWh]. One kilowatt-hour is equal to one kilowatt of power consumed over period of one hour, 1kWh = 1000Wh.

**Resetting consumption memory:**

> i Use the button only with FIBARO cover to ensure safety.

1. Press and hold the button to enter the menu.
2. Release button when the device glows green.
3. Quickly click the button to confirm.
4. Device will blink two times green to confirm.

> i The device stores periodically (every hour) the consumption data in the device memory. Disconnecting the module from the power supply will not erase stored energy consumption data.

# 9: Z-Wave range test

The device has a built in Z-Wave network main controller's range tester.

> i To make Z-Wave range test possible, the device must be added to the Z-Wave controller. Testing may stress the network, so it is recommended to perform the test only in special cases.

**To test the main controller's range:**

1. Press and hold the button to enter the menu.
2. Release button when the device glows magenta.
3. Quickly click the button to confirm.
4. Visual indicator will indicate the Z-Wave network's range (range signalling modes described below).
5. To exit Z-Wave range test, press the button briefly.

**Z-Wave range tester signalling modes:**

- **Visual indicator pulsing green** - the device attempts to establish a direct communication with the main controller. If a direct communication attempt fails, the device will try to establish a routed communication, through other modules, which will be signalled by visual indicator pulsing yellow.
- **Visual indicator glowing green** - the device communicates with the main controller directly.
- **Visual indicator pulsing yellow** - the device tries to establish a routed communication with the main controller through other modules (repeaters).
- **Visual indicator glowing yellow** - the device communicates with the main controller through the other modules. After 2 seconds the device will retry to establish a direct communication with the main controller, which will be signalled with visual indicator pulsing green.
- **Visual indicator pulsing violet** - the device does communicate at the maximum distance of the Z-Wave network. If connection proves successful it will be confirmed with a yellow glow. It's not recommended to use the device at the range limit.
- **Visual indicator glowing red** - the device is not able to connect to the main controller directly or through another Z-Wave network device (repeater).

> i Communication mode of the device may switch between direct and one using routing, especially if the device is on the limit of the direct range.

# 10: Configuration

## 10.1: Associations

**Association (linking devices)** – direct control of other devices within the Z-Wave system network.

Associations allow:

- reporting the device status to the Z-Wave controller (using Lifeline group),
- creating simple automations by controlling other devices without participation of the main controller (using groups assigned to actions on the device).

**The device provides the association of 2 groups:**

**1st association group – "Lifeline"** reports the device status and allows for assigning single device only (main controller by default).

**2nd association group – "Power"** devices in this group will be switched on or off depending on the current load of plugged device (uses Basic command class). Power thresholds and behaviour are configured using parameters 45-49. Allows to control 5 regular or multichannel devices.

## 10.2: Advanced parameters

The device allows customizing its operation to user's needs using configurable parameters.

The settings can be adjusted via the Z-Wave controller to which the device is added. The way of adjusting them might differ depending on the controller.

In the FIBARO interface parameters are presented as simple options in the Advanced Settings of the device.

**Available parameters:**

| **1.** | **Remember device state** |
|---|---|
| This parameter determines how the device will react in the event of power supply failure (e.g. power outage). | |
| **Parameter size** | 1B |
| **Default value** | 1 (restores the state) |
| **Available values** | 0 – remains switched off after restoring power<br>1 – restores remembered state after restoring power |

| 2. | Overload safety switch |
|---|---|
| This function allows to turn off the controlled device in case of exceeding the defined power. Controlled device can be turned back on via button or sending a control frame. | |
| **Parameter size** | 4B |
| **Default value** | 0 (disabled) |
| **Available values** | 0 – function disabled<br>10-36800 (1.0-3680.0W, step 0.1W) – power threshold |
| **10.** | **LED frame – power limit** |
| This parameter determines maximum active power. Exceeding it results in the LED frame flashing violet. Function is active only when parameter 11 is set to 8 or 9. | |
| **Parameter size** | 4B |
| **Default value** | 36800 (3680W) |
| **Available values** | 500-36800 (50.0-3680.0W, step 0.1W) – power threshold |
| **11.** | **LED frame – colour when ON** |
| This parameter defines the LED colour when the device is ON.<br>When set to 8 or 9, LED frame colour will change depending on he measured power and parameter 10. Other colours are set permanently and do not depend on power consumption. | |
| **Parameter size** | 1B |
| **Default value** | 8 (depending on measured power) |
| **Available values** | 0 – LED disabled<br>1 – White<br>2 – Red<br>3 – Green<br>4 – Blue<br>5 – Yellow<br>6 – Cyan<br>7 – Magenta<br>8 – colour changes smoothly depending on measured power<br>9 – colour changes in steps depending on measured power |

| 12. | LED frame – colour when OFF |
|---|---|
| This parameter defines the LED colour when the device is OFF. | |
| **Parameter size** | 1B |
| **Default value** | 0 (disabled) |
| **Available values** | 0 – LED disabled<br>1 – White<br>2 – Red<br>3 – Green<br>4 – Blue<br>5 – Yellow<br>6 – Cyan<br>7 – Magenta |
| **13.** | **LED frame – brightness** |
| This parameter allows to adjust the LED frame brightness. | |
| **Parameter size** | 1B |
| **Default value** | 100 (100%) |
| **Available values** | 0 – LED disabled<br>1-100 (1-100% brightness)<br>101 – brightness directly proportional to measured power<br>102 – brightness inversely proportional to measured power |

| 30. | Alarm configuration - 1st slot |
|---|---|
| This parameter determines to which alarm frames and how the device should react. The parameters consist of 4 bytes, three most significant bytes are set according to the official Z-Wave protocol specification. | |
| **Parameter size** | 4B |
| **Default value** | [0x00, 0x00, 0x00, 0x00] (disabled) |
| **Available values** | **1B** [MSB] – Notification Type<br>**2B** - Notification Status<br>**3B** - Event/State Parameters<br>**4B** [LSB] – action: |
| | **0x00** – no action, **0xX1** – turn ON, **0xX2** – turn OFF, **0xX3** – turn ON/OFF continuously, **0x0X** – no action on LED frame, **0x1X** – LED frame blinks red, **0x2X** – LED frame blinks green, **0x4X** – LED frame blinks blue, **0x8X** – disable LED frame, **0xFX** – LED frame LAPD signal (red-white-blue) |

| 31. | Alarm configuration - 2nd slot |
|---|---|
| This parameter determines to which alarm frames and how the device should react. The parameters consist of 4 bytes, three most significant bytes are set according to the official Z-Wave protocol specification. | |
| **Parameter size** | 4B |
| **Default value** | [0x05, 0xFF, 0x00, 0x00]<br>(Water Alarm, any notification, no action) |
| **Available values** | **1B** [MSB] – Notification Type<br>**2B** - Notification Status<br>**3B** - Event/State Parameters<br>**4B** [LSB] – action: |
| | **0x00** – no action, **0xX1** – turn ON, **0xX2** – turn OFF, **0xX3** – turn ON/OFF continuously, **0x0X** – no action on LED frame, **0x1X** – LED frame blinks red, **0x2X** – LED frame blinks green, **0x4X** – LED frame blinks blue, **0x8X** – disable LED frame, **0xFX** – LED frame LAPD signal (red-white-blue) |

| 32. | Alarm configuration - 3rd slot |
|---|---|
| This parameter determines to which alarm frames and how the device should react. The parameters consist of 4 bytes, three most significant bytes are set according to the official Z-Wave protocol specification. | |
| **Parameter size** | 4B |
| **Default value** | [0x01, 0xFF, 0x00, 0x00]<br>(Smoke Alarm, any notification, no action) |
| **Available values** | **1B** [MSB] – Notification Type<br>**2B** - Notification Status<br>**3B** - Event/State Parameters<br>**4B** [LSB] – action: |
| | **0x00** – no action, **0xX1** – turn ON, **0xX2** – turn OFF, **0xX3** – turn ON/OFF continuously, **0x0X** – no action on LED frame, **0x1X** – LED frame blinks red, **0x2X** – LED frame blinks green, **0x4X** – LED frame blinks blue, **0x8X** – disable LED frame, **0xFX** – LED frame LAPD signal (red-white-blue) |

| 33. | Alarm configuration - 4th slot |
|---|---|
| This parameter determines to which alarm frames and how the device should react. The parameters consist of 4 bytes, three most significant bytes are set according to the official Z-Wave protocol specification. | |
| **Parameter size** | 4B |
| **Default value** | [0x02, 0xFF, 0x00, 0x00]<br>(CO Alarm, any notification, no action) |
| **Available values** | **1B** [MSB] – Notification Type<br>**2B** - Notification Status<br>**3B** - Event/State Parameters<br>**4B** [LSB] – action: |
| | **0x00** – no action, **0xX1** – turn ON, **0xX2** – turn OFF, **0xX3** – turn ON/OFF continuously, **0x0X** – no action on LED frame, **0x1X** – LED frame blinks red, **0x2X** – LED frame blinks green, **0x4X** – LED frame blinks blue, **0x8X** – disable LED frame, **0xFX** – LED frame LAPD signal (red-white-blue) |

| 34. | Alarm configuration - 5th slot |
|---|---|
| This parameter determines to which alarm frames and how the device should react. The parameters consist of 4 bytes, three most significant bytes are set according to the official Z-Wave protocol specification. | |
| **Parameter size** | 4B |
| **Default value** | [0x04, 0xFF, 0x00, 0x00]<br>(Heat Alarm, any notification, no action) |
| **Available values** | **1B** [MSB] – Notification Type<br>**2B** - Notification Status<br>**3B** - Event/State Parameters<br>**4B** [LSB] – action: |
| | **0x00** – no action, **0xX1** – turn ON, **0xX2** – turn OFF, **0xX3** – turn ON/OFF continuously, **0x0X** – no action on LED frame, **0x1X** – LED frame blinks red, **0x2X** – LED frame blinks green, **0x4X** – LED frame blinks blue, **0x8X** – disable LED frame, **0xFX** – LED frame LAPD signal (red-white-blue) |
| **35.** | **Alarm configuration – duration** |
| This parameter defines duration of alarm sequence. When time set in this parameter elapses, alarm is cancelled, LED frame and relay restore normal operation, but do not recover state from before the alarm. | |
| **Parameter size** | 2B |
| **Default value** | 600 (10min) |
| **Available values** | 0 – infinite<br>1-32400 (1s-9h, 1s step) – duration |
| **45.** | **Associations – 2nd group** |
| This parameter determines which actions will result in sending control frames to devices associated in 2nd group. | |
| **Parameter size** | 1B |
| **Default value** | 3 |
| **Available values** | 1 – Power exceeds UP threshold<br>2 – Power drops below DOWN threshold<br>3 – Power exceeds UP threshold or drops below DOWN threshold |

| 46. | Associations – UP threshold |
|---|---|
| This parameter determines upper power threshold for 2nd association group (paramter 45). Exceeding it will result in sending value set in parameter 47.<br>Cannot be lower than DOWN threshold (parameter 48). | |
| **Parameter size** | 4B |
| **Default value** | 500 (50W) |
| **Available values** | 100-36800 (10-3680W, 0.1W step) – power threshold |
| **47.** | **Associations – UP threshold frame value** |
| This parameter defines value sent to devices in 2nd association group when power exceeds UP threshold set in parameter 46 (using Basic Command Class). | |
| **Parameter size** | 2B |
| **Default value** | 255 |
| **Available values** | 0 – turn off<br>1-99 – set level<br>255 – turn on with previous level |
| **48.** | **Associations – DOWN threshold** |
| This parameter determines lower power threshold for 2nd association group (paramter 45). Exceeding it will result in sending value set in parameter 49. | |
| **Parameter size** | 4B |
| **Default value** | 300 (30W) |
| **Available values** | 0-36700 (0-3670W, 0.1W step) – power threshold |
| **49.** | **Associations – DOWN threshold frame value** |
| This parameter defines value sent to devices in 2nd association group when power drops below DOWN threshold set in parameter 48 (using Basic Command Class). | |
| **Parameter size** | 2B |
| **Default value** | 0 |
| **Available values** | 0 – turn off<br>1-99 – set level<br>255 – turn on with previous level |

| 60. | Power reports – include self-consumption |
|---|---|
| This parameter determines whether the power measurements should include power consumed by the device itself. | |
| **Parameter size** | 1B |
| **Default value** | 0 (not included) |
| **Available values** | 0 – Self-consumption not included<br>1 – Self-consumption included |
| **61.** | **Power reports – on change** |
| This parameter defines minimal change (from the last reported) in measured power that results in sending new report. For loads under 50W the parameter is irrelevant, report are sent every 5W change. | |
| **Parameter size** | 2B |
| **Default value** | 15 (15%) |
| **Available values** | 0 - reporting on change disabled<br>1-500 (1-500%, 1% step) – minimal change |
| **62.** | **Power reports – periodic** |
| This parameter defines reporting interval for measured power. Periodic reports are independent from changes in value (parameter 61). | |
| **Parameter size** | 2B |
| **Default value** | 3600 (1h) |
| **Available values** | 0 – periodic reports disabled<br>30-32400 (30s-9h, 1s step) – time interval |
| **65.** | **Energy reports – on change** |
| This parameter defines minimal change (from the last reported) in measured energy that results in sending new report. | |
| **Parameter size** | 2B |
| **Default value** | 10 (0.1kWh) |
| **Available values** | 0 - reporting on change disabled<br>1-500 (0.01-5kWh, 0.01kWh step) – minimal change |

| 66. | Energy reports – periodic |
|---|---|
| This parameter defines reporting interval for measured energy. Periodic reports are independent from changes in value (parameter 65). | |
| **Parameter size** | 2B |
| **Default value** | 3600 (1h) |
| **Available values** | 0 – periodic reports disabled<br>30-32400 (30s-9h, 1s step) – time interval |

# 11: Z-Wave specification

**Generic Device Class**: GENERIC_TYPE_SWITCH_BINARY

**Specific Device Class**: SPECIFIC_TYPE_POWER_SWITCH_BINARY

**Supported Command Classes**

| | Command Class | Version | Secure |
|---|---|---|---|
| 1. | COMMAND_CLASS_ZWAVEPLUS_INFO [0x5E] | V2 | |
| 2. | COMMAND_CLASS_SWITCH_BINARY [0x25] | V1 | YES |
| 3. | COMMAND_CLASS_ASSOCIATION [0x85] | V2 | YES |
| 4. | COMMAND_CLASS_MULTI_CHANNEL_ASSOCI-ATION [0x8E] | V3 | YES |
| 5. | COMMAND_CLASS_ASSOCIATION_GRP_INFO [0x59] | V2 | YES |
| 6. | COMMAND_CLASS_TRANSPORT_SERVICE [0x55] | V2 | |
| 7. | COMMAND_CLASS_VERSION [0x86] | V2 | YES |
| 8. | COMMAND_CLASS_MANUFACTURER_SPECIFIC [0x72] | V2 | YES |
| 9. | COMMAND_CLASS_DEVICE_RESET_LOCALLY [0x5A] | V1 | YES |
| 10. | COMMAND_CLASS_POWERLEVEL [0x73] | V1 | YES |
| 11. | COMMAND_CLASS_SECURITY [0x98] | V1 | |
| 12. | COMMAND_CLASS_SECURITY_2 [0x9F] | V1 | |
| 13. | COMMAND_CLASS_METER [0x32] | V3 | YES |
| 14. | COMMAND_CLASS_CONFIGURATION [0x70] | V1 | YES |
| 15. | COMMAND_CLASS_CRC_16_ENCAP [0x56] | V1 | |
| 16. | COMMAND_CLASS_NOTIFICATION [0x71] | V8 | YES |
| 17. | COMMAND_CLASS_PROTECTION [0x75] | V2 | YES |
| 18. | COMMAND_CLASS_FIRMWARE_UPDATE_MD [0x7A] | V4 | YES |
| 19. | COMMAND_CLASS_APPLICATION_STATUS [0x22] | V1 | |
| 20. | COMMAND_CLASS_SUPERVISION [0x6C] | V1 | |
| 21. | COMMAND_CLASS_BASIC [0x20] | V1 | YES |

### Notification Command Class

The device uses Notification Command Class to report different events to the controller ("Lifeline" group).

| Notification Type | Event | Parameter |
|---|---|---|
| Power Management [0x08] | Over-current detected [0x06/V3] | |
| Power Management [0x08] | Over-load detected [0x08/V3] | |
| System [0x09] | System hardware failure with manufacturer proprietary failure code [0x03] | MP code: 0x01 [device overheat] |

### Protection CC

Protection Command Class allows to prevent local or remote control of the outputs.

| Type | State | Description | Hint |
|---|---|---|---|
| Local | 0 | Unprotected - The device is not protected, and may be operated normally via the user interface. | Inputs connected with outputs. |
| Local | 2 | No operation possible – state of output cannot be changed by the B-button or corresponding Input | Inputs disconnected from outputs. |
| RF | 0 | Unprotected - The device accept and respond to all RF Commands. | Outputs can be controlled via Z-Wave. |
| RF | 1 | No RF control – command class basic and switch binary are rejected, every other command class will be handled | Outputs cannot be controlled via Z-Wave. |

### Meter CC

| Meter Type | Scale | Rate Type | Precision | Size |
|---|---|---|---|---|
| Electric [0x01] | Electric_kWh [0x00] (default) | Import [0x01] | 2 | 4 |
| Electric [0x01] | Electric_W [0x02] | Import [0x01] | 1 | 2 |

# 12: Parts compatibility

| Available FIBARO parts | | Included | |
|---|---|---|---|
| Name | Symbol | FGWOF-011 | FGWOE-011 |
| Socket F Unit | FG-WO-AS-4002 | x | |
| Socket E Unit | FG-WO-AS-4003 | | x |
| Socket F | FG-WO-PP-0010 | x | |
| Socket E | FG-WO-PP-0009 | | x |
| Outer Lightguide | FG-WO-PP-0004 | x | x |
| Shutter Unit | FG-WO-AS-4001 | x | x |
| Mounting Frame FIBARO/ GIRA | FG-Wx-AS-4001 | x | x |
| Mounting Frame Legrand | FG-Wx-AS-4002 | | |
| Mounting Frame Schneider | FG-Wx-AS-4003 | | |
| Single Cover Plate | FG-Wx-PP-0001 | x | x |
| Double Cover Plate | FG-Wx-PP-0003 | | |
| Triple Cover Plate | FG-Wx-PP-0004 | | |

**Parts required for GIRA System 55 (only with non-metalised outer surface: Standard 55, E2, Event, Event Clear) covers**

| Required FIBARO parts | | Socket type | |
|---|---|---|---|
| Name | Symbol | GIRA Type F | GIRA Type E |
| Socket F Unit | FG-WO-AS-4002 | x | |
| Socket E Unit | FG-WO-AS-4003 | | x |
| Mounting Frame FIBARO/ GIRA | FG-Wx-AS-4001 | x | x |

**Parts required for Legrand Céliane covers**

| Required FIBARO parts | | Socket type | |
|---|---|---|---|
| Name | Symbol | Legrand Type F | Legrand Type E |
| Socket F Unit | FG-WO-AS-4002 | x | |
| Socket E Unit | FG-WO-AS-4003 | | x |
| Mounting Frame Legrand | FG-Wx-AS-4002 | x | x |
| Shutter Unit | FG-WO-AS-4001 | x | x |

**Parts required for Schneider Odace covers**

| Required FIBARO parts | | Socket type | |
|---|---|---|---|
| Name | Symbol | Schneider Type F | Schneider Type E |
| Socket F Unit | FG-WO-AS-4002 | x | |
| Socket E Unit | FG-WO-AS-4003 | | x |
| Mounting Frame Schneider | FG-Wx-AS-4003 | x | x |
| Shutter Unit | FG-WO-AS-4001 | x | x |

# 13: Regulations

### Legal Notices

All information, including, but not limited to, information regarding the features, functionality, and/or other product specification are subject to change without notice. Fibaro reserves all rights to revise or update its products, software, or documentation without any obligation to notify any individual or entity.

FIBARO and Fibar Group logo are trademarks of Fibar Group S.A. All other brands and product names referred to herein are trademarks of their respective holders.

### Declaration of conformity

Hereby, Fibar Group S.A. declares that the device is in compliance with the essential requirements and other relevant provisions of Directive 2014/53/EU. The full text of the EU declaration of conformity is available at the following internet address: www.manuals.fibaro.com

### WEEE Directive Compliance

Device labelled with this symbol should not be disposed with other household wastes. It shall be handed over to the applicable collection point for the recycling of waste electrical and electronic equipment.