FIBARO®
HOME INTELLIGENCE

OPERATING
MANUAL

EN

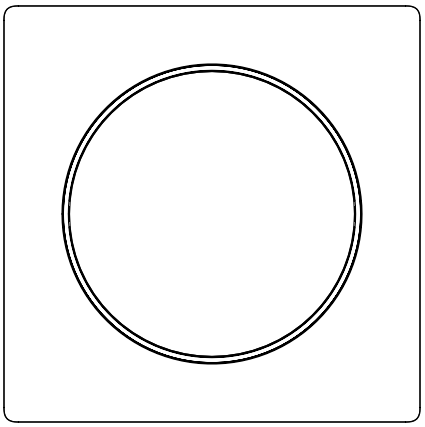

# FIBARO WALLI DIMMER

## FGWDEU-111

v1.0

# Table of contents


1: Important safety information 4
2: Description and features 5
2.1: Description 5
2.2: Main features 5
3: FIBARO Bypass 2 (FGB-002) 6
4: Specifications 7
5: Installation 8
5.1: Before installation 8
5.2: Preparing for installation 9
5.3: Electrical connection 10
5.4: Assembling the device 11
5.5: Activating the device 13
6: Adding to Z-Wave network 14
6.1: Adding manually 14
6.2: Adding using Smart Start 15
7: Removing from Z-Wave network 16
8: Calibration 17
9: Operating the device 18
9.1: Controls 18
9.3: Button control 18
9.4: Visual indications 18
9.5: Menu 19
9.6: Resetting to factory defaults 20
10: Power and energy metering 21
11: Z-Wave range test 22
12: Configuration 23
12.1: Associations 23
12.2: Advanced parameters 24
13: Z-Wave specification 39
14: Parts compatibility 42
15: Regulations 43

# 1: Important safety information

**Read this manual before attempting to install the device!**

Failure to observe recommendations included in this manual may be dangerous or cause a violation of the law. The manufacturer, Fibar Group S.A. will not be held responsible for any loss or damage resulting from not following the instructions of operating manual.

**DANGER OF ELECTROCUTION!**

The device is designed to operate in electrical home installation. Faulty connection or use may result in fire or electric shock.

All works on the device may be performed only by a qualified and licensed electrician. Observe national regulations.

Even when the device is turned off, voltage may be present at its terminals. Any maintenance introducing changes into the configuration of connections or the load must be always performed with disabled fuse.

To avoid risk of electrical shock, do not operate the device with wet or moist hands.

**Do not modify!**

Do not modify this device in any way not included in this manual.

**Other devices**

The manufacturer, Fibar Group S.A. will not be held responsible for any damage or loss of warranty privileges for other connected devices if the connection is not compliant with their manuals.

**This product is intended for indoor use only in dry locations.**

Do not use in damp or wet locations, near a bathtub, sink, shower, swimming pool, or anywhere else where water or moisture are present.

**Not a toy!**

This product is not a toy. Keep away from children and animals!

# 2: Description and features

## 2.1: Description

**FIBARO Walli Dimmer** is a smart wall dimmer designed to control light source via Z-Wave network.

It measures active power and energy consumed by the controlled load.

You can install it with provided cover plate and switch button or other compatible.

## 2.2: Main features

- Can be used for dimming:
  - » 110/230V operated conventional incandescent and halogen,
  - » 12V operated ELV halogen lamps and dimmable LED bulbs (with electronic transformers),
  - » 12V operated MLV halogen lamps (with ferromagnetic transformers),
  - » dimmable LED bulbs,
  - » dimmable compact fluorescent CFL tube lamps,
  - » supported dimmable light sources (power factor > 0.5) with minimal power of 5VA using FIBARO Bypass 2.
- Can be used for switching:
  - » compact fluorescent CFL tube lamps with electronic ballast,
  - » fluorescent tube lamps with electronic ballast,
  - » LED bulbs (power factor > 0.7),
  - » supported light sources (power factor > 0.5) with minimal power of 5VA using FIBARO Bypass 2.
- Uses different operating modes:
  - » „Trailing edge” for resistive loads (R)
  - » „Trailing edge” for resistive-capacitive loads (RC)
  - » „Leading edge” for resistive-inductive loads (RL)
- Can be used with FIBARO Walli covers or other compatible (see "Parts compatibility" on page 42):
  - » GIRA – System 55 (Standard 55, E2, Event, Event Clear),
  - » Legrand – Céliane,
  - » Schneider – Odace.
- Active power and energy consumption metering.

- Can be installed in two and three-wired configuration.
- Calibrates automatically to the connected light source.
- Supports Z-Wave network Security Modes: S0 with AES-128 encryption and S2 Authenticated with PRNG-based encryption.
- Works as a Z-Wave signal repeater (all non-battery operated devices within the network will act as repeaters to increase reliability of the network).
- May be used with all devices certified with the Z-Wave Plus certificate and should be compatible with such devices produced by other manufacturers.

i The device is a Security Enabled Z-Wave Plus product and a Security Enabled Z-Wave Controller must be used in order to fully utilize the product.

## 3: FIBARO Bypass 2 (FGB-002)

FIBARO Bypass 2 (FGB-002) is a device designed to work with FIBARO Dimmer 2 (FGD-212) and Walli Dimmer (FGWDEU-111). It should be used in case of connecting LED bulbs or energy saving compact fluorescent lamps. FIBARO Bypass 2 prevents flickering of the LED lights and glowing of the turned off compact fluorescent lamps.

In the case of 2-wire connection, FIBARO Bypass 2 allows to reduce minimum power of load required by the Dimmer for correct operation. FGB-002 provides powering of the Dimmer in case of controlling the low loads of minimum power down to 5VA (for cosφ>0.5).

i In the case of 2-wire connection do not connect load below minimal power without FGB-002.

i Bypass 2 works only in trailing edge mode. Do not connect the Bypass 2 to the Dimmer operating in leading edge mode.

i Bypass 2 is sensitive to the frequent changes of the state of Dimmer (alternate switching on and off). Significant changes in brightness should not be performed more than once per second.

# 4: Specifications

| | | |
|---|---|---|
| Power supply | 110-230V~ 50/60 Hz | |
| Compatible load types | | **Resistive loads**<br>Conventional incandescent and halogen light sources<br>**Resistive-capacitive loads**<br>Fluorescent tube lamp (compact / with electronic ballast), electronic transformer, LED<br>**Resistive-inductive loads**<br>Ferromagnetic transformers |
| Rated load current | 0.22A-1.52A – resistive loads (incandescent and halogen)<br>0.22A-1.3A – resistive-capacitive loads (fluorescent tube lamp, electronic transformer, LED)<br>0.22A-1.3A – resistive-inductive loads (ferromagnetic transformers)<br>0.022A-0.22A – with Bypass 2: fluorescent tube lamp or LED | |
| Active element | semiconductor electronic switch ε | |
| Recommended external overcurrent protection | 10A type B circuit breaker (EU)<br>13A type B circuit breaker (Sweden) | |
| For installation in boxes | Ø = 60mm, depth ≥ 40mm | |
| Recommended wires | cross-section area between 1.5-4.0mm$^2$, stripped 12-12.5mm of insulation | |
| Operating temperature | 0–35°C | |
| Ambient humidity | 10–95% RH without condensation | |
| Radio protocol | Z-Wave (500 series chip) | |
| Radio frequency band | 868.0–868.6MHz; 869.7–870.0MHz | |
| Max. transmitting power | +6dBm | |
| Range | up to 50m outdoors<br>up to 40m indoors<br>(depending on terrain and building structure) | |
| Dimensions (Height x Width x Depth) | 86 x 86 x 51 mm | |
| Compliance with EU directives | RoHS 2011/65/EU<br>RED 2014/53/EU | |

i Radio frequency of individual device must be same as your Z-Wave controller. Check information on the box or consult your dealer if you are not sure.

# 5: Installation

## 5.1: Before installation

⚠ **Connecting the device in a manner inconsistent with this manual may cause risk to health, life or material damage.**

- **Do not** power the device before fully assembling it in the mounting box,
- Connect only in accordance with one of the diagrams,
- Install only in flush mounting boxes compliant with a relevant national safety standards and with depth no less than 40mm,
- **Do not** connect devices which are not compliant with the specification or relevant safety standards,
- **Do not** connect heating devices,
- **Do not** connect SELV or PELV circuits,
- **Do not** connect loads below minimal power in 2-wire connection without Bypass 2.
- **Do not** connect different types of light sources simultaneously
- **Do not** connect the power supply without a load
- **Do not** connect more than one transformer
- When using magnetic transformer load it with 50% of its nominal power at minimum
- Minimize number of electronic transformers in a circuit, noises caused by them in electrical grids may affect device operation.
- Make sure you have all required parts when installing with covers other than FIBARO (see "Parts compatibility" on page 42).

**Device parts:**

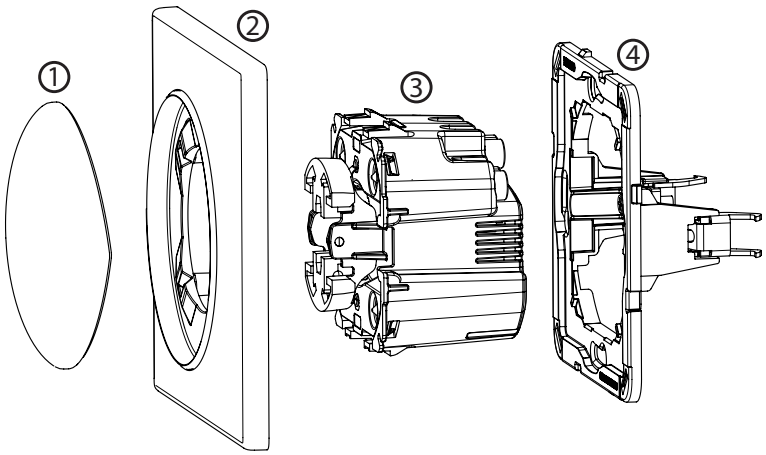


1 – switch button, 2 – cover plate, 3 – unit (device), 4 – mounting frame

**Notes for diagrams:**

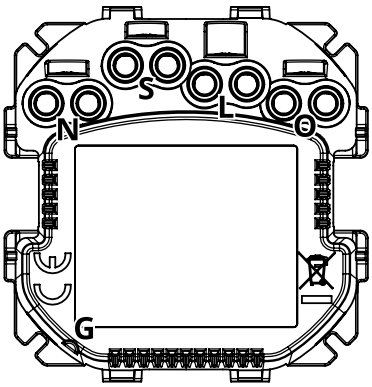


**N** – terminal for neutral wire

**S** – support terminal of 2-wire connection

**L** – terminal for live wire

**O** – output terminal for controlled load

**G** – groove used to measure wire length

## 5.2: Preparing for installation

Prepare wires by removing 12-12.5mm of insulation from their ends. You can use groove on the side of the unit to measure the length.

**When installing with FIBARO or GIRA covers:**

1. Pull out the switch button.
2. Take off the cover plate.

**When installing with Legrand or Schneider covers:**

1. Pull out the original switch button.
2. Take off the original cover plate.
3. Dismount the original mounting frame.
4. Snap the new mounting frame*.

* Additional mounting frames are sold separately.

## 5.3: Electrical connection

1. Switch off the mains voltage (disable the fuse).
2. Connect with one of the diagrams below:

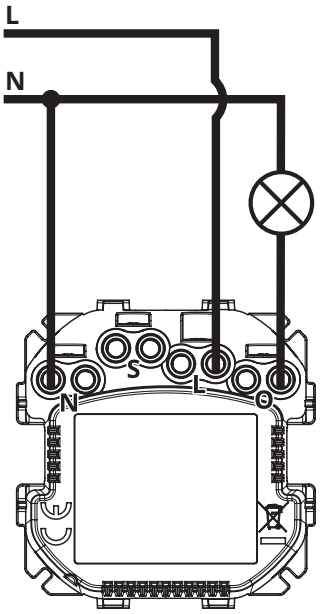


Diagram 1: Example connection for 3-wire installation

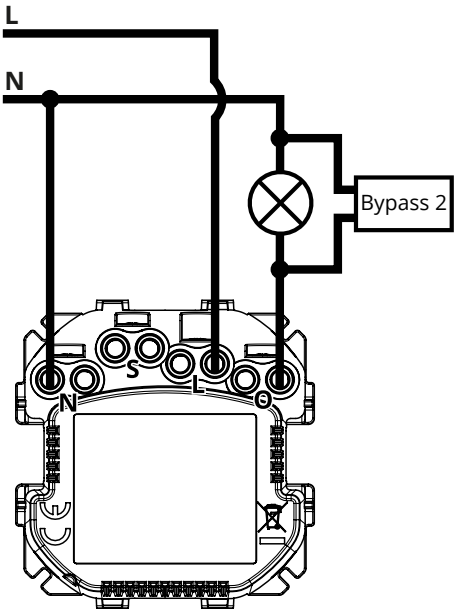


Diagram 2: Example connection for 3-wire installation with Bypass 2

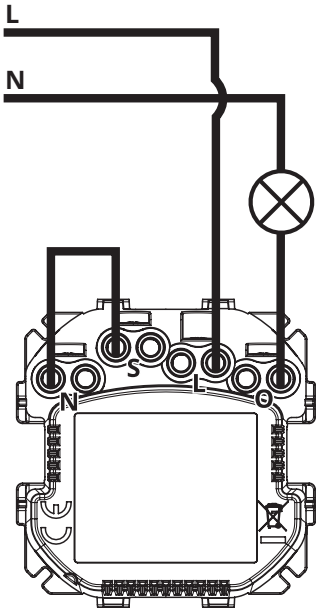


Diagram 3: Example connection for 2-wire installation

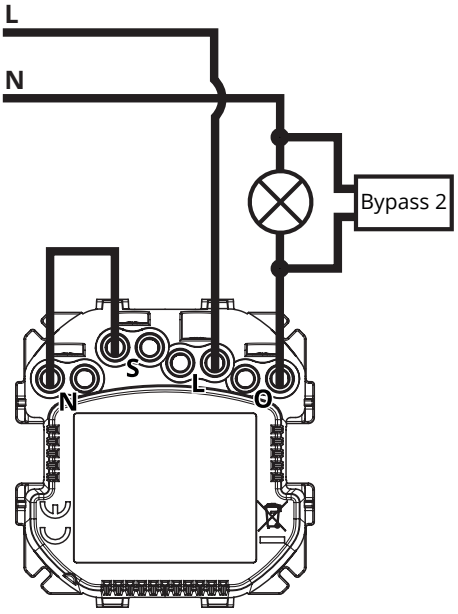


Diagram 4: Example connection for 2-wire installation with Bypass 2

3. Verify correctness of connection.
4. Tighten the terminal screws using PH1 screwdriver.

## 5.4: Assembling the device

i When installing the device in the mounting box orient the device with terminal screws going up or to the left (for horizontal button position) to ensure button order.

i When installing with covers other than FIBARO, we recommend disabling the LED by changing parameter 13 to 0.

**When installing with FIBARO covers:**

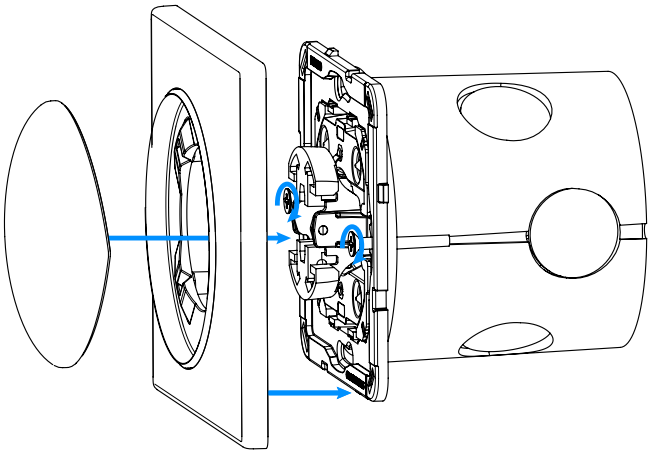

1. Insert the device with mounting frame into the mounting box and secure with mounting claws and screws.
2. Snap the cover plate to the device.
3. Snap the switch button to the device.

**When installing with GIRA covers:**

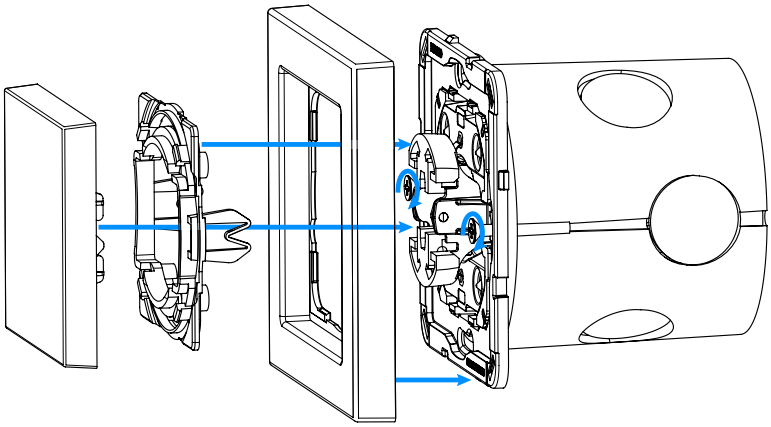

1. Insert the device with mounting frame into the mounting box and secure with mounting claws and screws.
2. Snap the new cover plate to the device.
3. Snap the switch button adapter* to the device.
4. Snap the new switch button to the device.

**When installing with Legrand covers:**

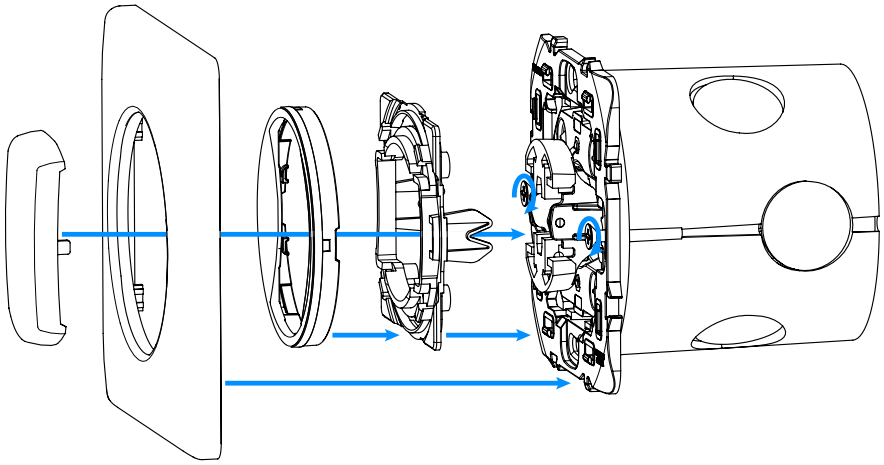

1. Insert the device with mounting frame* into the mounting box and secure with mounting claws and screws.
2. Snap the switch button adapter* to the device.
3. Snap the new inner cover plate to the device.
4. Snap the new outer cover plate to the device.
5. Snap the new switch button to the device.

**When installing with Schneider covers:**

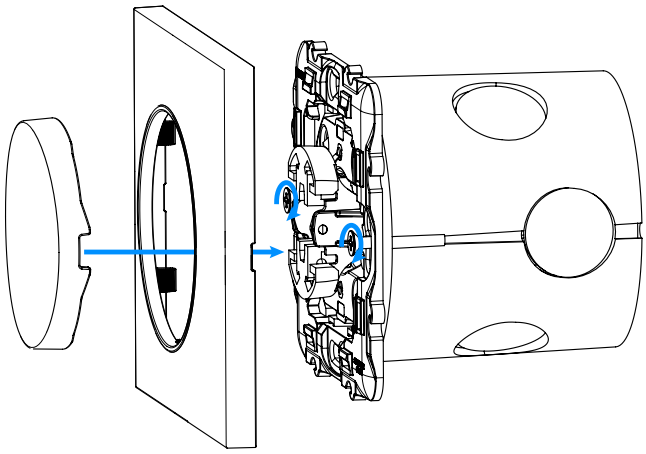

1. Insert the device with mounting frame* into the mounting box and secure with mounting claws and screws.
2. Snap the new  cover plate to the device.
3. Snap the new switch button to the device.

* Switch button adapter and additional mounting frames are sold separately.

## 5.5: Activating the device

1. If the device fully assembled, switch on the mains voltage.
2. LED ring light means the device is powered.
3. Wait for the calibration process to end. Light may blink, the device will be switched off once the process is completed.
4. The device can be added to the Z-Wave network.

# 6: Adding to Z-Wave network

**Adding (Inclusion)** – Z-Wave device learning mode, allowing to add the device to existing Z-Wave network.

## 6.1: Adding manually

To add the device to the Z-Wave network **manually**:

1. Set the main controller in (Security/non-Security Mode) add mode (see the controller's manual).
2. Quickly, three times click one of the buttons.
3. If you are adding in Security S2 Authenticated, scan the DSK QR code or input the underlined part of the DSK (label on the bottom of the box).
4. LED will start blinking yellow, wait for the adding process to end.
5. Adding result will be confirmed by the Z-Wave controller's message and the LED frame:
   - **Green** – successful (non-secure, S0, S2 non-authenticated),
   - **Magenta** – successful (Security S2 Authenticated),
   - **Red** – not successful.

## 6.2: Adding using Smart Start

**SmartStart** enabled products can be added to SmartStart enabled Z-Wave controller by scanning the Z-Wave QR Code present on the product. SmartStart product will be added automatically within 10 minutes of being switched on in the network range.

To add the device to the Z-Wave network **using Smart Start**:

1. Set the main controller in Security S2 Authenticated add mode (see the controller's manual).
2. Scan the DSK QR code or input the underlined part of the DSK (label on the bottom of the box).
3. Power the device.
4. Wait for the calibration process to end. Light may blink, the device will be switched off once the process is completed.
5. Wait for the adding process to start (up to few minutes), which is signalled with yellow LED blinking.
6. Adding result will be confirmed by the Z-Wave controller's message and the LED frame:
   - **Green** – successful (non-secure, S0, S2 non-authenticated),
   - **Magenta** – successful (Security S2 Authenticated),
   - **Red** – not successful.

   i In case of problems with adding the device, please reset the device and repeat the adding procedure.

# 7: Removing from Z-Wave network

**Removing (Exclusion)** – Z-Wave device learning mode, allowing to remove the device from existing Z-Wave network. Removing also results in resetting the device to factory defaults.

To **remove** the device from the Z-Wave network:

1. Set the main controller into remove mode (see the controller's manual).
2. Quickly, three times click one of the buttons.
3. LED will start blinking yellow, wait for the removing process to end.
4. Successful removing will be confirmed by the Z-Wave controller's message and red LED colour.
5. The device will start calibrating the load.

# 8: Calibration

The device is equipped with an algorithm of smart light source detection. It automatically selects suitable control mode (leading edge for inductive loads, trailing edge for capacitive or resistive loads) and adjusts maximum and minimum light levels.

i Installer is obliged to verify the proper operation of the device. There is a small probability that calibration settings will require a manual correction.

i In a 2-wire connection for non-resistive loads minimum level (parameter 150) must be adjusted manually.

i In a 2-wire connection if calibration results in Voltage Drop error, maximum level (parameter 151) must be adjusted manually.

i Some types of LED and CF lamps are designed to operate in leading edge mode (with conventional dimmers).

The device starts calibration automatically depending on parameter 175 or can be started manually by:

- Setting parameter 159 to 1 or 2 (without or with Bypass 2),
- Selecting blue or red (without or with Bypass 2) menu position.

The result of calibration will be confirmed by the LED frame:

- **GREEN** – Light source recognized as dimmable, dimming levels set,
- **YELLOW** – Light source recognized as non-dimmable, only switching possible,
- **RED** – Calibration failed: lack of connected load or connected light source exceeds maximum power,
- **BLINKING RED** - Calibration failed: installation failure or damaged load.

# 9: Operating the device

## 9.1: Controls

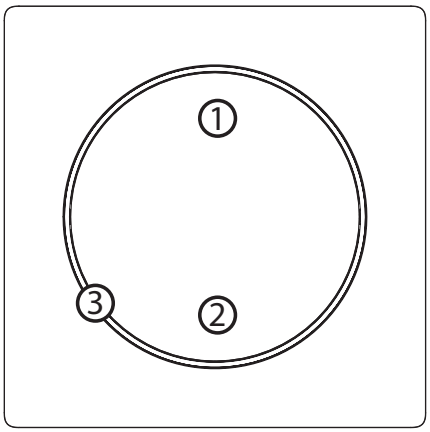


1. First/▲ button,
2. Second/▼ button,
3. LED ring.

## 9.3: Button control

**Controlling connected load**

Perform following actions on one of the buttons to change state of the connected load.

- Click ▲ if turned off – turn on with previous level,
- Click ▲ if turned on – set to 100%,
- 2xClick ▲ – set to 100%,
- Click ▼ – turn off,
- Hold ▲ – start brightening until released,
- Hold ▼ – start dimming until released.

**Other actions**

Perform following actions on one of the buttons to:

- 3xClick – start learn mode to add/remove to/from Z-Wave network,
- 1,2,3xClick/hold/release – activate scene in the controller for specific action (requires prior configuration),
- 3xClick then press and hold – enter the menu.

## 9.4: Visual indications

The built-in LED light shows current device status.

**After powering the device:**

- Green – device added to a Z-Wave network (non-secure, S0, S2 non-authenticated),

- Magenta – device added to a Z-Wave network (Security S2 Authenticated),
- Red – device not added to a Z-Wave network.

**State of the device:**

- White – load turned ON (configurable).

**Update:**

- Blinking cyan – update in progress,
- Green – update successful,
- Red – update not successful.

**Menu:**

- Blinking green – entering the menu (added as non-secure, S0, S2 non-authenticated),
- Blinking magenta – entering the menu (added as Security S2 Authenticated),
- Blinking red – entering the menu (not added to a Z-Wave network),
- Blue – start load calibration
- Red – start load calibration with FIBARO Bypass 2
- Green – reset energy consumption memory,
- Magenta – start Z-Wave range test,
- Yellow – reset to factory defaults.

## 9.5: Menu

**Menu** allows to perform Z-Wave network actions. In order to use the menu:

1. Quickly, three times click, then press and hold one of the buttons to enter the menu, device blinks to signal adding status (see 9.4: Visual indications).
2. Release the button when device signals desired position with colour:
   - **BLUE** – start load calibration
   - **RED** – start load calibration with FIBARO Bypass 2
   - **GREEN** – reset energy consumption memory
   - **MAGENTA** – start Z-Wave range test
   - **YELLOW** – reset to factory defaults
3. Quickly click the button to confirm.

## 9.6: Resetting to factory defaults

Reset procedure allows to restore the device back to its factory settings, which means all information about the Z-Wave controller and user configuration will be deleted. Resetting to factory defaults does not reset energy consumption memory.

> **i** Resetting the device is not the recommended way of removing the device from the Z-Wave network. Use reset procedure only if the primary controller is missing or inoperable. Certain device removal can be achieved by the procedure of removing described.

1. Quickly, three times click, then press and hold one of the buttons to enter the menu.
2. Release the button when the device glows yellow.
3. Quickly click the button to confirm.
4. After a few seconds the device will be restarted, which is signalled with red LED colour.

# 10: Power and energy metering

The device allows for the active power and energy consumption monitoring. Data is sent to the main Z-Wave controller, e.g. Home Center.

Measuring is carried out by the most advanced microcontroller technology, assuring maximum accuracy and precision (+/- 1% for loads greater than 10W).

**Electric active power** – power that energy receiver is changing into a work or a heat. The unit of active power is Watt [W].

> i Power measurement can contain mains voltage fluctuations within +/- 10%.

**Electric energy** – energy consumed by a device through a time period. Consumers of electricity in households are billed by suppliers on the basis of active power used in given unit of time. Most commonly measured in kilowatt-hour [kWh]. One kilowatt-hour is equal to one kilowatt of power consumed over period of one hour, 1kWh = 1000Wh.

**Resetting consumption memory:**

1. Quickly, three times click, then press and hold one of the buttons to enter the menu.
2. Release button when the device glows green.
3. Quickly click the button to confirm.
4. Device will blink two times green to confirm.

> i The device stores periodically the consumption data in the device memory. Disconnecting the module from the power supply will not erase stored energy consumption data.

| | 3-wire connection | |
|---|---|---|
| | Brightness>70% | Brightness<70% |
| resistive load | ±(0.5%+0.2W) | ±(2%+0.2W) |
| resistive-inductive load | ±(0.5%+0.2W) | ±(2%+0.2W) |
| resisitve-capacitive load | ±(0.5%+0.2W) | ±(2%+0.2W) |
| | 2-wire connection | |
| | Brightness>70% | Brightness<70% |
| resistive load | ±(2%+0.2W) | ±(4%+0.2W) |
| resistive-inductive load | Approximated* | Approximated* |
| resisitve-capacitive load | Approximated* | Approximated* |

* Measurements are only illustrative, returned values may differ from the actual measurement. In the case of reporting incorrect values change the values of parameters 178 and 179.

# 11: Z-Wave range test

The device has a built in Z-Wave network main controller's range tester.

> i To make Z-Wave range test possible, the device must be added to the Z-Wave controller. Testing may stress the network, so it is recommended to perform the test only in special cases.

**To test the main controller's range:**

1. Quickly, three times click, then press and hold one of the buttons to enter the menu.
2. Release button when the device glows magenta.
3. Quickly click the button to confirm.
4. Visual indicator will indicate the Z-Wave network's range (range signalling modes described below).
5. To exit Z-Wave range test, press the button briefly.

**Z-Wave range tester signalling modes:**

- **Visual indicator pulsing green** - the device attempts to establish a direct communication with the main controller. If a direct communication attempt fails, the device will try to establish a routed communication, through other modules, which will be signalled by visual indicator pulsing yellow.
- **Visual indicator glowing green** - the device communicates with the main controller directly.
- **Visual indicator pulsing yellow** - the device tries to establish a routed communication with the main controller through other modules (repeaters).
- **Visual indicator glowing yellow** - the device communicates with the main controller through the other modules. After 2 seconds the device will retry to establish a direct communication with the main controller, which will be signalled with visual indicator pulsing green.
- **Visual indicator pulsing violet** - the device does communicate at the maximum distance of the Z-Wave network. If connection proves successful it will be confirmed with a yellow glow. It's not recommended to use the device at the range limit.
- **Visual indicator glowing red** - the device is not able to connect to the main controller directly or through another Z-Wave network device (repeater).

> i Communication mode of the device may switch between direct and one using routing, especially if the device is on the limit of the direct range.

# 12: Configuration

## 12.1: Associations

**Association (linking devices)** – direct control of other devices within the Z-Wave system network.

Associations allow:

- reporting the device status to the Z-Wave controller (using Lifeline group),
- creating simple automations by controlling other devices without participation of the main controller (using groups assigned to actions on the device).

> i Commands send to 2nd and 3rd association groups reflect button operation according to device configuration, e.g. turning the load on using button will send frame responsible for the same action.

**The device provides the association of 3 groups:**

**1st association group – "Lifeline"** reports the device status and allows for assigning single device only (main controller by default).

**2nd association group – "On/Off"** is used to turn the associated devices on/off reflecting button operation (uses Basic command class).

**3rd association group – "Dimmer"** is used to change level of associated devices reflecting button operation (uses Switch Multilevel command class).

The device allows to control 5 regular or multichannel devices per an association group, with the exception of "LifeLine" that is reserved solely for the controller and hence only 1 node can be assigned.

**Commands sent to association groups**

| | 1 click | 2 click | Hold | Release |
|---|---|---|---|---|
| Button 1 | Basic Set: 2nd group, Multilevel Set: 3rd group | Basic Set: 2nd group, Multilevel Set: 3rd group | Multilevel Start Change: 3rd group | Multilevel Stop Change: 3rd group |
| Button 2 | Basic Set: 2nd group, Multilevel Set: 3rd group | – | Multilevel Start Change: 3rd group | Multilevel Stop Change: 3rd group |

## 12.2: Advanced parameters

The device allows to customize its operation to user's needs using configurable parameters.

The settings can be adjusted via Z-Wave controller to which the device is added. The way of adjusting them might differ depending on the controller.

In the FIBARO interface parameters are presented as simple options in Advanced Settings of the device.

**Available parameters:**

| **1.** | **Remember device state** |
|---|---|
| **Description** | This parameter determines how the device will react in the event of power supply failure (e.g. power outage). |
| **Parameter size** | 1B |
| **Default value** | 1 (restores the state) |
| **Available values** | 0 – remains switched off after restoring power<br>1 – restores remembered state after restoring power |
| **2.** | **Overload safety switch** |
| **Description** | This function allows to turn off the controlled device in case of exceeding the defined power. Controlled device can be turned back on via the button or sending a control frame. |
| **Parameter size** | 4B |
| **Default value** | 3500 (350W) |
| **Available values** | 0 – function disabled<br>10-5000 (1.0-500.0W, step 0.1W) – power threshold |
| **10.** | **LED frame – power limit** |
| **Description** | This parameter determines maximum active power. Exceeding it results in the LED frame flashing violet. Function is active only when parameter 11 is set to 8 or 9. |
| **Parameter size** | 4B |
| **Default value** | 3500 (350W) |
| **Available values** | 100-5000 (10.0-500.0W, step 0.1W) – power threshold |

| 11. | LED frame – colour when ON |
|---|---|
| **Description** | This parameter defines the LED colour when the device is ON.<br>When set to 8 or 9, LED frame colour will change depending on the measured power and parameter 10. Other colours are set permanently and do not depend on power consumption. |
| **Parameter size** | 1B |
| **Default value** | 1 (white) |
| **Available values** | 0 – LED disabled<br>1 – White<br>2 – Red<br>3 – Green<br>4 – Blue<br>5 – Yellow<br>6 – Cyan<br>7 – Magenta<br>8 – colour changes smoothly depending on measured power<br>9 – colour changes in steps depending on measured power |
| **12.** | **LED frame – colour when OFF** |
| **Description** | This parameter defines the LED colour when the device is OFF. |
| **Parameter size** | 1B |
| **Default value** | 0 (disabled) |
| **Available values** | 0 – LED disabled<br>1 – White<br>2 – Red<br>3 – Green<br>4 – Blue<br>5 – Yellow<br>6 – Cyan<br>7 – Magenta |

| 13. | LED frame – brightness |
|---|---|
| **Description** | This parameter allows to adjust the LED frame brightness. |
| **Parameter size** | 1B |
| **Default value** | 100 (100%) |
| **Available values** | 0 – LED disabled<br>1-100 (1-100% brightness)<br>101 – brightness directly proportional to set level<br>102 – brightness inversely proportional to set level |
| **24.** | **Buttons orientation** |
| **Description** | This parameter allows reversing the operation of the buttons. |
| **Parameter size** | 1B |
| **Default value** | 0 |
| **Available values** | 0 – default (1st button brightens, 2nd button dims)<br>1 – reversed (1st button dims, 2nd button brightens) |
| **30.** | **Alarm configuration - 1st slot** |
| **Description** | This parameter determines to which alarm frames and how the device should react. The parameters consist of 4 bytes, three most significant bytes are set according to the official Z-Wave protocol specification. |
| **Parameter size** | 4B |
| **Default value** | [0x00, 0x00, 0x00, 0x00] (disabled) |
| **Available values** | **1B** [MSB] – Notification Type<br>**2B** – Notification Status<br>**3B** – Event/State Parameters<br>**4B** [LSB] – action: |
| | **0x00** – no action, **0xX1** – turn ON, **0xX2** – turn OFF, **0xX3** – turn ON/OFF continuously, **0x0X** – no action on LED frame, **0x1X** – LED frame blinks red, **0x2X** – LED frame blinks green, **0x4X** – LED frame blinks blue, **0x8X** – disable LED frame, **0xFX** – LED frame LAPD signal (red-white-blue) |

| 31. | Alarm configuration - 2nd slot |
|---|---|
| **Description** | This parameter determines to which alarm frames and how the device should react. The parameters consist of 4 bytes, three most significant bytes are set according to the official Z-Wave protocol specification. |
| **Parameter size** | 4B |
| **Default value** | [0x05, 0xFF, 0x00, 0x00]<br>(Water Alarm, any notification, no action) |
| **Available values** | **1B** [MSB] – Notification Type<br>**2B** – Notification Status<br>**3B** – Event/State Parameters<br>**4B** [LSB] – action: |
| | **0x00** – no action, **0xX1** – turn ON, **0xX2** – turn OFF, **0xX3** – turn ON/OFF continuously, **0x0X** – no action on LED frame, **0x1X** – LED frame blinks red, **0x2X** – LED frame blinks green, **0x4X** – LED frame blinks blue, **0x8X** – disable LED frame, **0xFX** – LED frame LAPD signal (red-white-blue) |

| 32. | Alarm configuration - 3rd slot |
|---|---|
| **Description** | This parameter determines to which alarm frames and how the device should react. The parameters consist of 4 bytes, three most significant bytes are set according to the official Z-Wave protocol specification. |
| **Parameter size** | 4B |
| **Default value** | [0x01, 0xFF, 0x00, 0x00]<br>(Smoke Alarm, any notification, no action) |
| **Available values** | **1B** [MSB] – Notification Type<br>**2B** – Notification Status<br>**3B** – Event/State Parameters<br>**4B** [LSB] – action: |
| | **0x00** – no action, **0xX1** – turn ON, **0xX2** – turn OFF, **0xX3** – turn ON/OFF continuously, **0x0X** – no action on LED frame, **0x1X** – LED frame blinks red, **0x2X** – LED frame blinks green, **0x4X** – LED frame blinks blue, **0x8X** – disable LED frame, **0xFX** – LED frame LAPD signal (red-white-blue) |

| 33. | Alarm configuration - 4th slot |
|---|---|
| **Description** | This parameter determines to which alarm frames and how the device should react. The parameters consist of 4 bytes, three most significant bytes are set according to the official Z-Wave protocol specification. |
| **Parameter size** | 4B |
| **Default value** | [0x02, 0xFF, 0x00, 0x00]<br>(CO Alarm, any notification, no action) |
| **Available values** | **1B** [MSB] – Notification Type<br>**2B** – Notification Status<br>**3B** – Event/State Parameters<br>**4B** [LSB] – action: |
| | **0x00** – no action, **0xX1** – turn ON, **0xX2** – turn OFF, **0xX3** – turn ON/OFF continuously, **0x0X** – no action on LED frame, **0x1X** – LED frame blinks red, **0x2X** – LED frame blinks green, **0x4X** – LED frame blinks blue, **0x8X** – disable LED frame, **0xFX** – LED frame LAPD signal (red-white-blue) |

| 34. | Alarm configuration - 5th slot |
|---|---|
| **Description** | This parameter determines to which alarm frames and how the device should react. The parameters consist of 4 bytes, three most significant bytes are set according to the official Z-Wave protocol specification. |
| **Parameter size** | 4B |
| **Default value** | [0x04, 0xFF, 0x00, 0x00]<br>(Heat Alarm, any notification, no action) |
| **Available values** | **1B** [MSB] – Notification Type<br>**2B** – Notification Status<br>**3B** – Event/State Parameters<br>**4B** [LSB] – action: |
| | **0x00** – no action, **0xX1** – turn ON, **0xX2** – turn OFF, **0xX3** – turn ON/OFF continuously, **0x0X** – no action on LED frame, **0x1X** – LED frame blinks red, **0x2X** – LED frame blinks green, **0x4X** – LED frame blinks blue, **0x8X** – disable LED frame, **0xFX** – LED frame LAPD signal (red-white-blue) |

| 35. | Alarm configuration – duration |
|---|---|
| **Description** | This parameter defines duration of alarm sequence. When time set in this parameter elapses, alarm is cancelled, LED frame and relay restore normal operation, but do not recover state from before the alarm. |
| **Parameter size** | 2B |
| **Default value** | 600 (10min) |
| **Available values** | 0 – infinite<br>1-32400 (1s-9h, 1s step) – duration |
| **40.** | **First button – scenes sent** |
| **Description** | This parameter determines which actions result in sending scene IDs assigned to them. Values can be combined (e.g. 1+2=3 means that scenes for single and double click are sent).<br>Enabling scenes for triple click disables entering the device in learn mode by triple clicking. |
| **Parameter size** | 1B |
| **Default value** | 0 (no scenes) |
| **Available values** | 1 – Key pressed 1 time<br>2 – Key pressed 2 times<br>4 – Key pressed 3 times<br>8 – Key hold down and key released |
| **41.** | **Second button – scenes sent** |
| **Description** | This parameter determines which actions result in sending scene IDs assigned to them. Values can be combined (e.g. 1+2=3 means that scenes for single and double click are sent).<br>Enabling scenes for triple click disables entering the device in learn mode by triple clicking. |
| **Parameter size** | 1B |
| **Default value** | 0 (no scenes) |
| **Available values** | 1 – Key pressed 1 time<br>2 – Key pressed 2 times<br>4 – Key pressed 3 times<br>8 – Key hold down and key released |

| 60. | Power reports – include self-consumption |
|---|---|
| **Description** | This parameter determines whether the power measurements should include power consumed by the device itself. |
| **Parameter size** | 1B |
| **Default value** | 0 (not included) |
| **Available values** | 0 – Self-consumption not included<br>1 – Self-consumption included |
| **61.** | **Power reports – on change** |
| **Description** | This parameter defines minimal change (from the last reported) in measured power that results in sending new report. For loads under 50W the parameter is irrelevant, report are sent every 5W change. |
| **Parameter size** | 2B |
| **Default value** | 15 (15%) |
| **Available values** | 0 – reporting on change disabled<br>1-500 (1-500%, 1% step) – minimal change |
| **62.** | **Power reports – periodic** |
| **Description** | This parameter defines reporting interval for measured power. Periodic reports are independent from changes in value (parameter 61). |
| **Parameter size** | 2B |
| **Default value** | 3600 (1h) |
| **Available values** | 0 – periodic reports disabled<br>30-32400 (30s-9h, 1s step) – time interval |
| **65.** | **Energy reports – on change** |
| **Description** | This parameter defines minimal change (from the last reported) in measured energy that results in sending new report. |
| **Parameter size** | 2B |
| **Default value** | 10 (0.1kWh) |
| **Available values** | 0 – reporting on change disabled<br>1-500 (0.01-5kWh, 0.01kWh step) – minimal change |

| 66. | Energy reports – periodic |
|---|---|
| **Description** | This parameter defines reporting interval for measured energy. Periodic reports are independent from changes in value (parameter 65). |
| **Parameter size** | 2B |
| **Default value** | 3600 (1h) |
| **Available values** | 0 – periodic reports disabled<br>30-32400 (30s-9h, 1s step) – time interval |
| **150.** | **Minimum brightness level** |
| **Description** | This parameter is set automatically during the calibration process, but can be changed manually after the calibration. |
| **Parameter size** | 1B |
| **Default value** | 1 |
| **Available values** | 1-98 (1-98%, 1% step) – level of brightness |
| **151.** | **Maximum brightness level** |
| **Description** | This parameter is set automatically during the calibration process, but can be changed manually after the calibration. |
| **Parameter size** | 1B |
| **Default value** | 99 |
| **Available values** | 2-99 (2-99%, 1% step) – level of brightness |
| **152.** | **Incandescence level of dimmable compact fluorescent lamps** |
| **Description** | The virtual value set as a percentage level between parameters MIN (1%) and MAX. (99%). The device will set to this value after the first switch on. It is required for warming up and switching dimmable compact fluorescent lamps and certain types of light sources. |
| **Parameter size** | 1B |
| **Default value** | 1 |
| **Available values** | 1-99 (1-98%, 1% step) – level of brightness |

| 153. | Incandescence time of dimmable compact fluorescent lamps |
|---|---|
| **Description** | This parameter determines the time required for switching compact fluorescent lamps and certain types of light sources. Setting this parameter to 0 will disable the incandescence functionality. |
| **Parameter size** | 2B |
| **Default value** | 0 |
| **Available values** | 0-255 (0-25.5s, 0.1s step) – incandescence time |
| **154.** | **Automatic control – dimming step size** |
| **Description** | This parameter defines the percentage value of dimming step during the automatic control. |
| **Parameter size** | 1B |
| **Default value** | 1 |
| **Available values** | 1-99 (1-99%, 1% step) – dimming step |
| **155.** | **Automatic control – time of dimming step** |
| **Description** | This parameter defines the time of performing a single dimming step set in parameter 154 during the automatic control. |
| **Parameter size** | 2B |
| **Default value** | 1 (10ms) |
| **Available values** | 0-255 (0-2.55s, 10ms step) |
| **156.** | **Manual control – dimming step size** |
| **Description** | This parameter defines the percentage value of the dimming step during the manual control. |
| **Parameter size** | 1B |
| **Default value** | 1 |
| **Available values** | 1-99 (1-99%, 1% step) – dimming step |

| 157. | Manual control – time of dimming step |
|---|---|
| **Description** | This parameter defines the time of performing a single dimming step set in parameter 156 during the manual control. |
| **Parameter size** | 2B |
| **Default value** | 5 (50ms) |
| **Available values** | 0-255 (0-2.55s, 10ms step) |
| **158.** | **Auto-off functionality** |
| **Description** | This parameter allows to automatically switch off the device after a specified time from switching the light source on. It may be useful when the device is installed in the stairway. |
| **Parameter size** | 2B |
| **Default value** | 0 |
| **Available values** | 0 – auto-off disabled<br>1-32767 (1s-9.1h, 1s step) – auto-off time |
| **159.** | **Force auto-calibration** |
| **Description** | Changing value of this parameter will force the calibration process. During the calibration parameter is set to 1 or 2 and switched to 0 upon completion. |
| **Parameter size** | 1B |
| **Default value** | 0 |
| **Available values** | 0 – readout<br>1 – force auto-calibration without FIBARO Bypass 2<br>2 – force auto-calibration with FIBARO Bypass 2 |
| **160.** | **Auto-calibration status (read-only parameter)** |
| **Description** | This parameter determines operating mode of the device (automatic/manual settings). |
| **Parameter size** | 1B |
| **Default value** | 0 |
| **Available values** | 0 – calibration procedure not performed or the device operates on manual settings<br>1 – the device operates on auto-calibration settings |

| 161. | Burnt out bulb detection |
|---|---|
| **Description** | This parameter defines percentage power variation (compared to power consumption measured during the calibration) to be interpreted as load error/burnt out bulb. |
| **Parameter size** | 1B |
| **Default value** | 0 |
| **Available values** | 0 – function disabled<br>1-99 (1-99%, 1% step) – power variation |
| **162.** | **Time delay of a burnt out bulb and overload detection** |
| **Description** | This parameter defines detection delay for the burnt out bulb (parameter 161) and overload (parameter 2). |
| **Parameter size** | 2B |
| **Default value** | 5 |
| **Available values** | 0 – detection of a burnt out bulb disabled<br>1-255 (1-255s, 1s step) – time delay |
| **163.** | **First button – Switch ON value sent to 2nd and 3rd association groups** |
| **Description** | This parameter defines value sent with Switch ON command to devices associated in 2nd and 3rd association group. |
| **Parameter size** | 2B |
| **Default value** | 255 |
| **Available values** | 0-99, 255 – value sent<br>254 – send value equal to the current level |
| **164.** | **Second button – Switch OFF value sent to 2nd and 3rd association groups** |
| **Description** | This parameter defines value sent with Switch OFF command to devices associated in 2nd and 3rd association group. |
| **Parameter size** | 2B |
| **Default value** | 0 |
| **Available values** | 0-99, 255 – value sent<br>254 – send value equal to the current level |

| 165. | Double click – set level |
|---|---|
| **Description** | This parameter defines brightness level set after double-clicking any of the buttons. The same value is also sent to devices associated with 2nd and 3rd association group. |
| **Parameter size** | 1B |
| **Default value** | 99 |
| **Available values** | 0-99 (0-99%, 1% step) – set level |
| **170.** | **Load control mode** |
| **Description** | This parameter allows to set the desired load control mode. Auto-calibration sets value of this parameter to 2 (control mode recognized during auto-calibration), but the installer may force control mode using this parameter.<br>After changing parameter value, turn the load OFF and ON to change control mode. |
| **Parameter size** | 1B |
| **Default value** | 2 |
| **Available values** | 0 – forced leading edge<br>1 – forced trailing edge<br>2 – control mode selected automatically (based on auto-calibration) |
| **171.** | **Load control mode recognized during auto-calibration (read only)** |
| **Description** | This parameter allows to read load control mode that was set during auto-calibration. |
| **Parameter size** | 1B |
| **Default value** | – |
| **Available values** | 0 – leading edge<br>1 – trailing edge |

| 172. | ON/OFF mode |
|---|---|
| **Description** | This mode is necessary while connecting non-dimmable light sources. Setting this parameter to 1 automatically ignores brightening/dimming time settings. Forced auto-calibration will set this parameter's value to 2. |
| **Parameter size** | 1B |
| **Default value** | 2 |
| **Available values** | 0 – ON/OFF mode disabled (dimming is possible)<br>1 – ON/OFF mode enabled (dimming is not possible)<br>2 – mode selected automatically |
| **173.** | **Dimmability of the load (read only)** |
| **Description** | This parameter allows to read if the load detected during calibration procedure is dimmable. |
| **Parameter size** | 1B |
| **Default value** | — |
| **Available values** | 0 – load recognized as dimmable<br>1 – load recognized as non-dimmable |
| **174.** | **Soft-start functionality** |
| **Description** | This parameter allows to set time required to warm up the filament of halogen bulb. |
| **Parameter size** | 1B |
| **Default value** | 1 |
| **Available values** | 0 – no soft-start<br>1 – short soft-start (0.1s)<br>2 – long soft-start (0.5s) |

| 175. | Auto-calibration after power on |
|---|---|
| **Description** | This parameter determines the trigger of auto-calibration procedure, e.g. power on, load error, etc. |
| **Parameter size** | 1B |
| **Default value** | 1 |
| **Available values** | 0 – no auto-calibration after power on<br>2 – Auto-calibration after each power on<br>3 – Auto-calibration after each LOAD ERROR (no load, load failure, burnt out bulb), if parameter 176 is set to 1 also after SURGE (output overvoltage) and OVERCURRENT (output overcurrent)<br>4 – Auto-calibration after each power on or after each LOAD ERROR (no load, load failure, burnt out bulb), if parameter 176 is set to 1 also after SURGE (output overvoltage) and OVERCURRENT (output overcurrent) |
| **176.** | **Behaviour after OVERCURRENT or SURGE** |
| **Description** | Error occurrences related to surge or overcurrent results in turning off the output to prevent possible malfunction. By default the device performs three attempts to turn on the load (useful in case of temporary, short failures of the power supply). |
| **Parameter size** | 1B |
| **Default value** | 1 |
| **Available values** | 0 – device permanently disabled until re-enabling by command or external switch<br>1 – three attempts to turn on the load |

| 177. | Brightness level correction for flickering loads |
|---|---|
| **Description** | Correction reduces spontaneous flickering of some capacitive loads (e.g. dimmable LEDs) at certain brightness levels in 2-wire installation.<br>In countries using ripple-control, correction may cause changes in brightness. In this case it is necessary to disable correction or adjust the time of correction for flickering loads. |
| **Parameter size** | 2B |
| **Default value** | 255 |
| **Available values** | 0 – automatic correction disabled<br>1-254 (1-254s, 1s step) – duration of correction<br>255 – automatic correction always enabled |
| **178.** | **Method of calculating the active power** |
| **Description** | This parameter defines how to calculate active power. It is useful in a case of 2-wire connection with light sources other than resistive. |
| **Parameter size** | 1B |
| **Default value** | 0 |
| **Available values** | 0 – measurement based on the standard algorithm<br>1 – approximation based on the calibration data<br>2 – approximation based on the control angle |
| **179.** | **Approximated power at the maximum brightness level** |
| **Description** | This parameter determines the approximate value of the power that will be reported by the device at its maximum brightness level. |
| **Parameter size** | 2B |
| **Default value** | 0 |
| **Available values** | 0-500 (0-500W, 1W step) – power consumed by the load at the maximum brightness level. |

# 13: Z-Wave specification

**Generic Device Class**: GENERIC_TYPE_SWITCH_MULTILEVEL

**Specific Device Class**: SPECIFIC_TYPE_POWER_SWITCH_MULTILEVEL

**Supported Command Classes**

| | Command Class | Version | Secure |
|---|---|---|---|
| 1. | COMMAND_CLASS_ZWAVEPLUS_INFO [0x5E] | V2 | |
| 2. | COMMAND_CLASS_SWITCH_MULTILEVEL [0x26] | V4 | YES |
| 3. | COMMAND_CLASS_ASSOCIATION [0x85] | V2 | YES |
| 4. | COMMAND_CLASS_MULTI_CHANNEL_ASSOCI-ATION [0x8E] | V3 | YES |
| 5. | COMMAND_CLASS_ASSOCIATION_GRP_INFO [0x59] | V2 | YES |
| 6. | COMMAND_CLASS_TRANSPORT_SERVICE [0x55] | V2 | |
| 7. | COMMAND_CLASS_VERSION [0x86] | V2 | YES |
| 8. | COMMAND_CLASS_MANUFACTURER_SPECIFIC [0x72] | V2 | YES |
| 9. | COMMAND_CLASS_DEVICE_RESET_LOCALLY [0x5A] | V1 | YES |
| 10. | COMMAND_CLASS_POWERLEVEL [0x73] | V1 | YES |
| 11. | COMMAND_CLASS_SECURITY [0x98] | V1 | |
| 12. | COMMAND_CLASS_SECURITY_2 [0x9F] | V1 | |
| 13. | COMMAND_CLASS_SUPERVISION [0x6C] | V1 | |
| 14. | COMMAND_CLASS_METER [0x32] | V3 | YES |
| 15. | COMMAND_CLASS_CONFIGURATION [0x70] | V1 | YES |
| 16. | COMMAND_CLASS_CRC_16_ENCAP [0x56] | V1 | |
| 17. | COMMAND_CLASS_NOTIFICATION [0x71] | V8 | YES |
| 18. | COMMAND_CLASS_PROTECTION [0x75] | V2 | YES |
| 19. | COMMAND_CLASS_CENTRAL_SCENE [0x5B] | V3 | YES |
| 20. | COMMAND_CLASS_FIRMWARE_UPDATE_MD [0x7A] | V4 | YES |
| 21. | COMMAND_CLASS_APPLICATION_STATUS [0x22] | V1 | |
| 22. | COMMAND_CLASS_BASIC [0x20] | V1 | YES |

### Notification Command Class

The device uses Notification Command Class to report different events to the controller ("Lifeline" group).

| Notification Type | Event | Parameter |
|---|---|---|
| Power Management [0x08] | Over-current detected [0x06/V3] | |
| Power Management [0x08] | Over-load detected [0x08] | |
| Power Management [0x08] | Load error [0x09] | |
| Power Management [0x08] | Surge detected [0x04] | |
| Power Management [0x08] | Voltage Drop/Drift [0x05] | |
| System [0x09] | System hardware failure with manufacturer proprietary failure code [0x03] | MP code: 0x01 [device overheat] |

### Protection CC

Protection Command Class allows to prevent local or remote control of the outputs.

| Type | State | Description | Hint |
|---|---|---|---|
| Local | 0 | Unprotected - The device is not protected, and may be operated normally via the user interface. | Inputs connected with outputs. |
| Local | 2 | No operation possible – button can not change relay state, any other functionality is available (menu). | Inputs disconnected from outputs. |
| RF | 0 | Unprotected - The device accept and respond to all RF Commands. | Outputs can be controlled via Z-Wave. |
| RF | 1 | No RF control – command class basic and switch binary are rejected, every other command class will be handled. | Outputs cannot be controlled via Z-Wave. |

**Meter CC**

| Meter Type | Scale | Rate Type | Precision | Size |
|---|---|---|---|---|
| Electric [0x01] | Electric_kWh [0x00] (default) | Import [0x01] | 2 | 4 |
| Electric [0x01] | Electric_W [0x02] | Import [0x01] | 1 | 2 |

# 14: Parts compatibility

| Available FIBARO parts | | Included in FGWDEU-111 |
|---|---|---|
| Name | Symbol | |
| Walli Dimmer Unit | FG-WDEU111-AS-8001 | x |
| Switch Button with Lightguide | FG-WDSEU221-AS-8100 | x |
| Switch Button Adapter | FG-WDSEU221-PP-0007 | |
| Mounting Frame FIBARO/ GIRA | FG-Wx-AS-4001 | x |
| Mounting Frame Legrand | FG-Wx-AS-4002 | |
| Mounting Frame Schneider | FG-Wx-AS-4003 | |
| Single Cover Plate | FG-Wx-PP-0001 | x |
| Double Cover Plate | FG-Wx-PP-0003 | |
| Triple Cover Plate | FG-Wx-PP-0004 | |

**Parts required for GIRA System 55 (only with non-metalised outer surface: Standard 55, E2, Event, Event Clear) covers**

| Required FIBARO parts | |
|---|---|
| Name | Symbol |
| Walli Dimmer Unit | FG-WDEU111-AS-8001 |
| Adapter | FG-WDSEU221-PP-0007 |
| Mounting Frame FIBARO/ GIRA | FG-Wx-AS-4001 |

**Parts required for Legrand Céliane covers**

| Required FIBARO parts | |
|---|---|
| Name | Symbol |
| Walli Dimmer Unit | FG-WDEU111-AS-8001 |
| Adapter | FG-WDSEU221-PP-0007 |
| Mounting Frame Legrand | FG-Wx-AS-4002 |

**Parts required for Schneider Odace covers**

| Required FIBARO parts | |
|---|---|
| Name | Symbol |
| Walli Dimmer Unit | FG-WDEU111-AS-8001 |
| Mounting Frame Schneider | FG-Wx-AS-4003 |

# 15: Regulations

## Legal Notices

All information, including, but not limited to, information regarding the features, functionality, and/or other product specification are subject to change without notice. Fibaro reserves all rights to revise or update its products, software, or documentation without any obligation to notify any individual or entity.

FIBARO and Fibar Group logo are trademarks of Fibar Group S.A. All other brands and product names referred to herein are trademarks of their respective holders.

## Declaration of conformity

Hereby, Fibar Group S.A. declares that the device is in compliance with the essential requirements and other relevant provisions of Directive 2014/53/EU. The full text of the EU declaration of conformity is available at the following internet address: www.manuals.fibaro.com

## WEEE Directive Compliance

Device labelled with this symbol should not be disposed with other household wastes. It shall be handed over to the applicable collection point for the recycling of waste electrical and electronic equipment.