FIBARO®
HOME INTELLIGENCE

OPERATING
MANUAL

EN

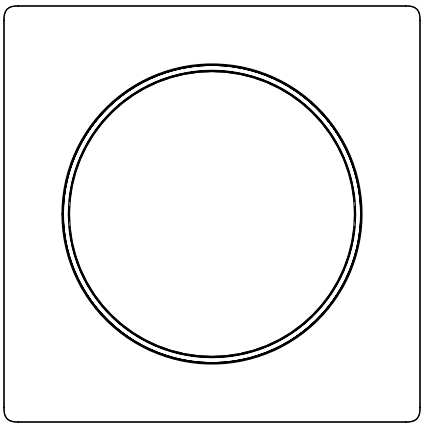

FIBARO WALLI ROLLER SHUTTER

FGWREU-111

v1.0

Table of contents

1: Important safety information 4
2: Description and features 5
2.1: Description 5
2.2: Main features 5
3: Specifications 6
4: Installation 7
4.1: Before installation 7
4.2: Preparing for installation 8
4.3: Electrical connection 8
4.4: Assembling the device 9
4.5: Activating the device 10
5: Adding to Z-Wave network 11
5.1: Adding manually 11
5.2: Adding using SmartStart 12
6: Removing from Z-Wave network 13
7: Calibration 14
8: Operating the device 16
8.1: Controls 16
8.2: Button control 16
8.3: Visual indications 16
8.4: Menu 17
8.5: Resetting to factory defaults 18
9: Power and energy metering 19
10: Z-Wave range test 20
11: Configuration 21
11.1: Associations 21
11.2: Advanced parameters 23
12: Z-Wave specification 33
13: Parts compatibility 36
14: Regulations 37

1: Important safety information

Read this manual before attempting to install the device!

Failure to observe recommendations included in this manual may be dangerous or cause a violation of the law. The manufacturer, Fibar Group S.A. will not be held responsible for any loss or damage resulting from not following the instructions of operating manual.

DANGER OF ELECTROCUTION!

The device is designed to operate in electrical home installation. Faulty connection or use may result in fire or electric shock.

All works on the device may be performed only by a qualified and licensed electrician. Observe national regulations.

Even when the device is turned off, voltage may be present at its terminals. Any maintenance introducing changes into the configuration of connections or the load must be always performed with disabled fuse.

To avoid risk of electrical shock, do not operate the device with wet or moist hands.

Do not modify!

Do not modify this device in any way not included in this manual.

Other devices

The manufacturer, Fibar Group S.A. will not be held responsible for any damage or loss of warranty privileges for other connected devices if the connection is not compliant with their manuals.

This product is intended for indoor use only in dry locations.

Do not use in damp or wet locations, near a bathtub, sink, shower, swimming pool, or anywhere else where water or moisture are present.

CAUTION!

It is not recommended to operate all of the roller blinds simultaneously. For safety reasons, at least one roller blind should be controlled independently, providing safe escape route in case of emergency.

Not a toy!

This product is not a toy. Keep away from children and animals!

2: Description and features

2.1: Description

FIBARO Walli Roller Shutter is a smart wall switch designed to control motors of roller blinds, awnings, venetian blinds and other single phase, AC powered devices via Z-Wave network.

It measures active power and energy consumed by the controlled load.

You can install it with provided cover plate and switch button or other compatible.

2.2: Main features

- Can be used with:
  - » roller blinds ,
  - » venetian blinds,
  - » awnings,
  - » blind motors with electronic or mechanical limit switches.
- Can be used with Walli covers or covers from the following product lines (see “Parts compatibility” on page 36):
  - » GIRA – System 55 (Standard 55, E2, Event, Event Clear),
  - » Legrand – Céliane,
  - » Schneider – Odace.
- Active power and energy metering.
- Supports Z-Wave network Security Modes: S0 with AES-128 encryption and S2 Authenticated with PRNG-based encryption.
- Works as a Z-Wave signal repeater (all non-battery operated devices within the network will act as repeaters to increase reliability of the network).
- May be used with all devices certified with the Z-Wave Plus certificate and should be compatible with such devices produced by other manufacturers.

i The device is a Security Enabled Z-Wave Plus product and a Security Enabled Z-Wave Controller must be used in order to fully utilize the product.

3: Specifications

Power supply	110-230V~ 50/60 Hz
Rated load current	4A for motors with compensated power factor (inductive loads) 13A for resistive loads
Compatible load types	single-phase AC motors resistive loads
Required limit switches	electronic or mechanic
Recommended external overcurrent protection	10A type B circuit breaker (EU) 13A type B circuit breaker (Sweden)
For installation in boxes	Ø = 60mm, depth ≥ 40mm
Recommended wires	cross-section area between 1.5-4.0mm^2, stripped 11.5-13mm of insulation
Operating temperature	0–35°C
Ambient humidity	10–95% RH without condensation
Radio protocol	Z-Wave (500 series chip)
Radio frequency	EU: 868.4/868.42/869.85 MHz RU: 869.0 MHz
Transmit power	EIRP max. 6dBm
Range	up to 50m outdoors up to 40m indoors (depending on terrain and building structure)
Dimensions (Height x Width x Depth)	86 x 86 x 51 mm
Compliance with EU directives	RoHS 2011/65/EU RED 2014/53/EU

i Radio frequency of individual device must be same as your Z-Wave controller. Check information on the box or consult your dealer if you are not sure.

4: Installation

4.1: Before installation

⚠ **Connecting the device in a manner inconsistent with this manual may cause risk to health, life or material damage.**

- **Do not** power the device before fully assembling it in the mounting box,
- Connect only in accordance with one of the diagrams,
- Install only in flush mounting boxes compliant with a relevant national safety standards and with depth no less than 40mm,
- **Do not** connect devices which are not compliant with the specification or relevant safety standards,
- **Do not** connect heating devices,
- **Do not** connect SELV or PELV circuits.
- Make sure you have all required parts when installing with covers other than FIBARO (see “Parts compatibility” on page 36).

Device parts:

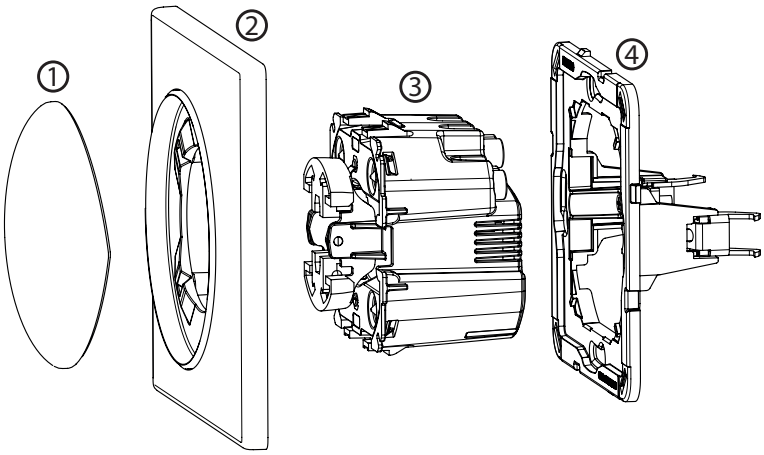

1 – switch button, 2 – cover plate, 3 – unit (device), 4 – mounting frame

Notes for diagrams:

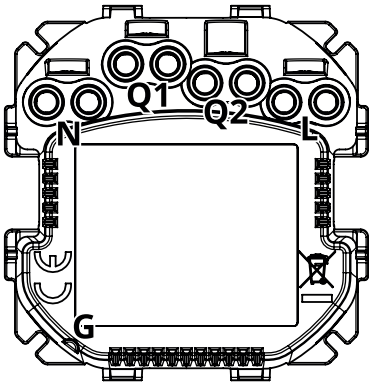

N - terminal for neutral wire

Q1 – 1st output terminal motor

Q2 – 2nd output terminal motor

L – terminal for live wire

G – groove used to measure wire length

4.2: Preparing for installation

Prepare wires by removing 11.5-13mm of insulation from their ends. You can use groove on the side of the unit to measure the length.

When installing with FIBARO or GIRA covers:

1. Pull out the switch button.
2. Take off the cover plate.

When installing with Legrand or Schneider covers:

1. Pull out the original switch button.
2. Take off the original cover plate.
3. Dismount the original mounting frame.
4. Snap the new mounting frame*.

* Additional mounting frames are sold separately.

4.3: Electrical connection

1. Switch off the mains voltage (disable the fuse).
2. Connect with the diagram:

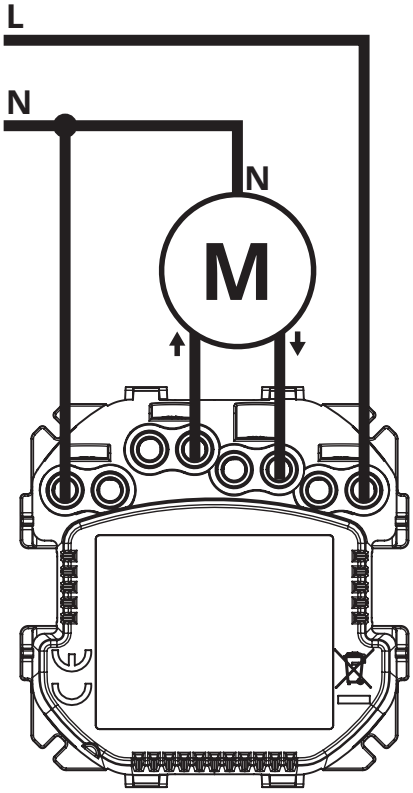

Diagram 1: Example connection with roller blind motor

3. Verify correctness of connection.
4. Tighten the terminal screws using PH1 screwdriver.

4.4: Assembling the device

i When installing the device in the mounting box orient the device with terminal screws going up or to the left (for horizontal button position) to ensure button order.

i When installing with covers other than FIBARO, we recommend disabling the LED by changing parameter 13 to 0.

When installing with FIBARO covers:

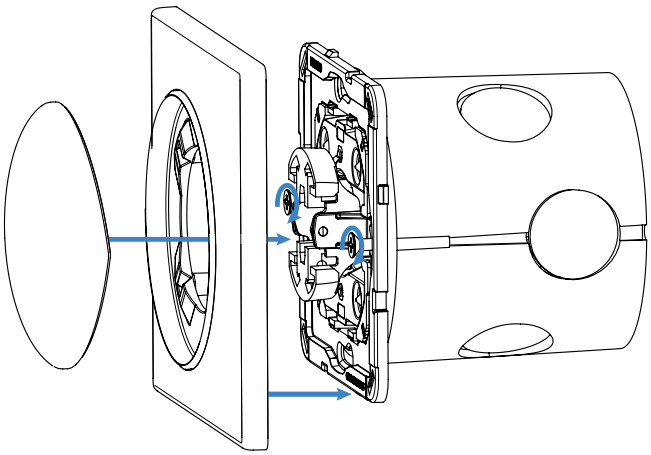

1. Insert the device with mounting frame into the mounting box and secure with mounting claws and screws.
2. Snap the cover plate to the device.
3. Snap the switch button to the device.

When installing with GIRA covers:

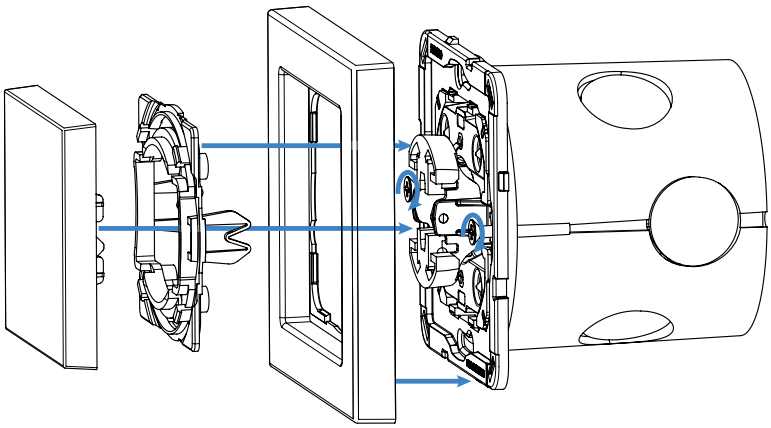

1. Insert the device with mounting frame into the mounting box and secure with mounting claws and screws.
2. Snap the new cover plate to the device.
3. Snap the switch button adapter* to the device.
4. Snap the new switch button to the device.

When installing with Legrand covers:

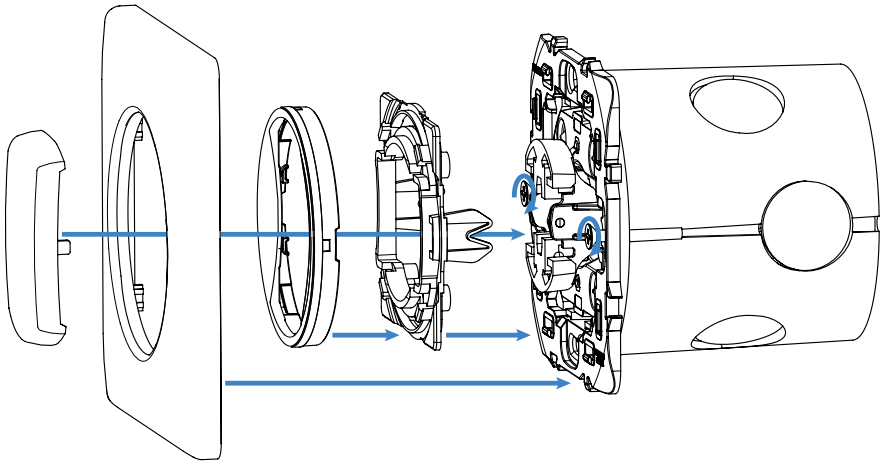

1. Insert the device with mounting frame* into the mounting box and secure with mounting claws and screws.
2. Snap the switch button adapter* to the device.
3. Snap the new inner cover plate to the device.
4. Snap the new outer cover plate to the device.
5. Snap the new switch button to the device.

When installing with Schneider covers:

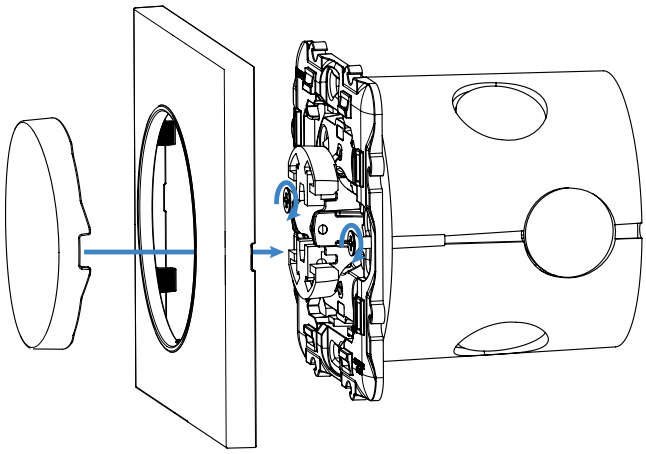

1. Insert the device with mounting frame* into the mounting box and secure with mounting claws and screws.
2. Snap the new cover plate to the device.
3. Snap the new switch button to the device.

* Switch button adapter and additional mounting frames are sold separately.

4.5: Activating the device

1. If the device fully assembled, switch on the mains voltage.
2. LED ring light means the device is powered and can be added to the Z-Wave network.

5: Adding to Z-Wave network

Adding (Inclusion) – Z-Wave device learning mode, allowing to add the device to existing Z-Wave network.

5.1: Adding manually

To add the device to the Z-Wave network **manually**:

1. Power the device.
2. Set the main controller in (Security/non-Security Mode) add mode (see the controller's manual).
3. Quickly, three times click one of the buttons.
4. If you are adding in Security S2 Authenticated, scan the DSK QR code or input the underlined part of the DSK (label on the bottom of the box).
5. LED will start blinking yellow, wait for the adding process to end.
6. Adding result will be confirmed by the Z-Wave controller's message and the LED frame:
   - **Green** – successful (non-secure, S0, S2 non-authenticated),
   - **Magenta** – successful (Security S2 Authenticated),
   - **Red** – not successful.

5.2: Adding using SmartStart

SmartStart enabled products can be added to SmartStart enabled Z-Wave controller by scanning the Z-Wave QR Code present on the product. SmartStart product will be added automatically within 10 minutes of being switched on in the network range.

To add the device to the Z-Wave network **using SmartStart**:

1. Set the main controller in Security S2 Authenticated add mode (see the controller's manual).
2. Scan the DSK QR code or input the underlined part of the DSK (label on the bottom of the box).
3. Power the device.
4. Wait for the adding process to start (up to few minutes), which is signalled with yellow LED blinking.
5. Adding result will be confirmed by the Z-Wave controller's message and the LED frame:
   - **Green** – successful (non-secure, S0, S2 non-authenticated),
   - **Magenta** – successful (Security S2 Authenticated),
   - **Red** – not successful.

   i In case of problems with adding the device, please reset the device and repeat the adding procedure.

6: Removing from Z-Wave network

Removing (Exclusion) – Z-Wave device learning mode, allowing to remove the device from existing Z-Wave network. Removing also results in resetting the device to factory defaults.

To **remove** the device from the Z-Wave network:

1. Power the device.
2. Set the main controller into remove mode (see the controller's manual).
3. Quickly, three times click one of the buttons.
4. LED will start blinking yellow, wait for the removing process to end.
5. Successful removing will be confirmed by the Z-Wave controller's message and red LED colour.

7: Calibration

Calibration is a process during which a device learns the position of the limit switches and a motor characteristic.

Calibration is mandatory in order for the device to correctly recognize a roller blind position.

The procedure consists of an automatic, full movement between the limit switches (up, down, and up again).

Button description:

▲ – 1st button, for up movement

▼ – 2nd button, for down movement

Automatic positioning of standard roller blind using the menu

1. Set parameter 151 to 1 (default).
2. Quickly, three times click, then press and hold one of the buttons to enter the menu.
3. Release button when the device glows white.
4. Quickly click the button to confirm.
5. The device will perform the calibration process, completing full cycle – up, down and up again. During the calibration the LED frame blinks white.
6. Test whether the positioning works correctly.

Automatic positioning of standard roller blind using the parameter

1. Set parameter 151 to 1 (default).
2. Set parameter 150 to 2.
3. The device will perform the calibration process, completing full cycle – up, down and up again. During the calibration the LED frame blinks white.
4. Test whether the positioning works correctly.

Manual positioning of slats in venetian blinds mode

1. Set parameter 151 to 2.
2. Calibrate blinds as standard ones (described above).
3. By default, time of transition between extreme positions is set to 150 (1.5 seconds) in parameter 152.
4. Turn slats between extreme positions by holding ▲ or ▼ button:
   - If after full cycle a blind starts moving up or down - decrease value of parameter 152,
   - If after full cycle the slats does not reach end positions - increase value of parameter 152,

5. Repeat previous step until satisfactory positioning is achieved.
6. Test whether the positioning works correctly. Correctly configured slats should not force the blinds to move up or down.

Manual positioning of roller blind with built-in driver

1. Set parameter 151 to 5 or 6.
2. By default, time of transition between extreme positions is set to 6000 (60 seconds) in parameters 156 and 157.
3. Move roller blinds between extreme positions by clicking ▲ or ▼ switch:
   - If roller blind stops before reaching top - increase value of parameter 156,
   - If roller blind does not stop after reaching top - decrease value of parameter 156,
   - If roller blind stops before reaching bottom - increase value of parameter 157,
   - If roller blind does not stop after reaching bottom - decrease value of parameter 157,
4. Repeat previous step until satisfactory positioning is achieved.
5. Test whether the positioning works correctly.

8: Operating the device

8.1: Controls

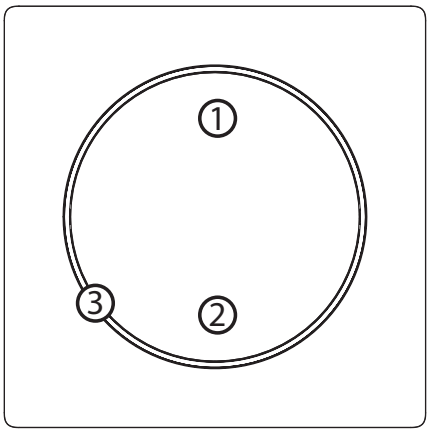

1. First/UP/▲ button,
2. Second/DOWN/▼ button,
3. LED ring.

8.2: Button control

Operating roller blinds (configurable using parameter 24)

- Click ▲ – initiate up movement.
- Click ▼ – initiate down movement.

If the blind is moving, clicking any button, will stop the movement.

Operating slats of venetian blinds

- Hold ▲ – initiate slats rotation up.
- Hold ▼ – initiate slats rotation down.

Release to stop the movement.

Other actions

Perform following actions on one of the buttons to:

- 3xClick – start learn mode to add/remove to/from Z-Wave network,
- 1,2,3xClick/hold/release – activate scene in the controller for specific action (requires configuration using parameters 40 and 41)
- 3xClick then press and hold – enter the menu.

8.3: Visual indications

The built-in LED light shows current device status.

After powering the device:

- Green – device added to a Z-Wave network (non-secure, S0, S2 non-authenticated),

- Magenta – device added to a Z-Wave network (Security S2 Authenticated),
- Red – device not added to a Z-Wave network.

State of the device:

- White – load turned ON (configurable using parameters 11 and 12).

Update:

- Blinking cyan – update in progress,
- Green – update successful,
- Red – update not successful.

Menu:

- Blinking green – entering the menu (added as non-secure, S0, S2 non-authenticated),
- Blinking magenta – entering the menu (added as Security S2 Authenticated),
- Blinking red – entering the menu (not added to a Z-Wave network),
- White – start calibration,
- Green – reset energy consumption memory,
- Magenta – start range test,
- Yellow – reset to factory defaults.

8.4: Menu

Menu allows to perform Z-Wave network actions. In order to use the menu:

1. Quickly, three times click, then press and hold one of the buttons to enter the menu, device blinks to signal adding status (see 8.3: Visual indications).
2. Release the button when device signals desired position with colour:
   - **WHITE** – start calibration
   - **GREEN** – reset energy consumption memory
   - **MAGENTA** – start range test
   - **YELLOW** – reset to factory defaults
3. Quickly click the button to confirm.

8.5: Resetting to factory defaults

Reset procedure allows to restore the device back to its factory settings, which means all information about the Z-Wave controller and user configuration will be deleted. Resetting to factory defaults does not reset energy consumption memory.

> **i** Resetting the device is not the recommended way of removing the device from the Z-Wave network. Use reset procedure only if the primary controller is missing or inoperable. Certain device removal can be achieved by the procedure of removing described.

1. Quickly, three times click, then press and hold one of the buttons to enter the menu.
2. Release button when the device glows yellow.
3. Quickly click the button to confirm.
4. After few seconds the device will be restarted, which is signalled with red LED colour.

9: Power and energy metering

The device allows for the active power and energy consumption monitoring. Data is sent to the main Z-Wave controller, e.g. Home Center.

Measuring is carried out by the most advanced microcontroller technology, assuring maximum accuracy and precision (+/- 1% for loads greater than 10W).

Electric active power – power that energy receiver is changing into a work or a heat. The unit of active power is Watt [W].

> i Power measurement can contain mains voltage fluctuations within +/- 10%.

Electric energy – energy consumed by a device through a time period. Consumers of electricity in households are billed by suppliers on the basis of active power used in given unit of time. Most commonly measured in kilowatt-hour [kWh]. One kilowatt-hour is equal to one kilowatt of power consumed over period of one hour, 1kWh = 1000Wh.

Resetting consumption memory:

1. Quickly, three times click, then press and hold one of the buttons to enter the menu.
2. Release button when the device glows green.
3. Quickly click the button to confirm.
4. Device will blink two times green to confirm.

> i The device stores periodically (every hour) the consumption data in the device memory. Disconnecting the module from the power supply will not erase stored energy consumption data.

10: Z-Wave range test

The device has a built in Z-Wave network main controller's range tester.

> i To make Z-Wave range test possible, the device must be added to the Z-Wave controller. Testing may stress the network, so it is recommended to perform the test only in special cases.

To test the main controller's range:

1. Quickly, three times click, then press and hold one of the buttons to enter the menu.
2. Release button when the device glows magenta.
3. Quickly click the button to confirm.
4. Visual indicator will indicate the Z-Wave network's range (range signaling modes described below).
5. To exit Z-Wave range test, press the button briefly.

Z-Wave range tester signalling modes:

- **Visual indicator pulsing green** - the device attempts to establish a direct communication with the main controller. If a direct communication attempt fails, the device will try to establish a routed communication, through other modules, which will be signalled by visual indicator pulsing yellow.
- **Visual indicator glowing green** - the device communicates with the main controller directly.
- **Visual indicator pulsing yellow** - the device tries to establish a routed communication with the main controller through other modules (repeaters).
- **Visual indicator glowing yellow** - the device communicates with the main controller through the other modules. After 2 seconds the device will retry to establish a direct communication with the main controller, which will be signalled with visual indicator pulsing green.
- **Visual indicator pulsing violet** - the device does communicate at the maximum distance of the Z-Wave network. If connection proves successful it will be confirmed with a yellow glow. It's not recommended to use the device at the range limit.
- **Visual indicator glowing red** - the device is not able to connect to the main controller directly or through another Z-Wave network device (repeater).

> i Communication mode of the device may switch between direct and one using routing, especially if the device is on the limit of the direct range.

11: Configuration

11.1: Associations

Association (linking devices) – direct control of other devices within the Z-Wave system network.

Associations allow:

- reporting the device status to the Z-Wave controller (using Lifeline group),
- creating simple automations by controlling other devices without participation of the main controller (using groups assigned to actions on the device).

> i Commands send to 2nd and 3rd association groups reflect button operation according to device configuration, e.g. starting the blinds movement using button will send frame responsible for the same action.

The device provides the association of 3 groups:

1st association group – "Lifeline" reports the device status and allows for assigning single device only (main controller by default).

2nd association group – "Roller Shutter" is assigned to shutter position control – UP/DOWN (uses Switch Multilevel command class).

3rd association group – "Slats" is assigned to slats position control – UP/DOWN (uses Switch Multilevel command class).

The device allows to control 5 regular or multichannel devices per an association group, with the exception of "LifeLine" that is reserved solely for the controller and hence only 1 node can be assigned.

Assocation groups mapping

Root	Endpoint	Association group in endpoint
Association Group 2	Endpoint 1	Association Group 2
Association Group 3	Endpoint 2	Association Group 2

Switch Multilevel commands sent to association groups for parameter 151 set to 1, 5 or 6

	Click	Hold	Release
Button 1 and 2	Start/Stop Level Change: 2nd group	Start Level Change: 3rd group	Stop Level Change: 3rd group

Switch Multilevel commands sent to association groups for parameter 151 set to 2

	Click	Hold	Release
Button 1 and 2	Start/Stop Level Change: 2nd group	–	Set Level: 3rd group

11.2: Advanced parameters

The device allows customizing its operation to user's needs using configurable parameters.

The settings can be adjusted via the Z-Wave controller to which the device is added. The way of adjusting them might differ depending on the controller.

In the FIBARO interface parameters are presented as simple options in the Advanced Settings of the device.

Available parameters:

11.	**LED frame – colour when moving**
Description	This parameter defines the LED colour when the motor is running.
Parameter size	1B
Default value	1 (white)
Available values	0 – LED disabled 1 – White 2 – Red 3 – Green 4 – Blue 5 – Yellow 6 – Cyan 7 – Magenta
12.	**LED frame – colour when not moving**
Description	This parameter defines the LED colour when the device motor is not running.
Parameter size	1B
Default value	0 (disabled)
Available values	0 – LED disabled 1 – White 2 – Red 3 – Green 4 – Blue 5 – Yellow 6 – Cyan 7 – Magenta

13.	LED frame – brightness
Description	This parameter allows to adjust the LED frame brightness.
Parameter size	1B
Default value	100 (100%)
Available values	0 – LED disabled 1-100 (1-100% brightness)
24.	**Buttons orientation**
Description	This parameter allows reversing the operation of the buttons.
Parameter size	1B
Default value	0
Available values	0 – default (1st button UP, 2nd button DOWN) 1 – reversed (1st button DOWN, 2nd button UP)
25.	**Outputs orientation**
Description	This parameter allows reversing the operation of Q1 and Q2 without changing the wiring (e.g. in case of invalid motor connection).
Parameter size	1B
Default value	0
Available values	0 - default (Q1 – UP, Q2 – DOWN) 1 - reversed (Q1 – DOWN, Q2 – UP)

30.	Alarm configuration - 1st slot
Description	This parameter determines to which alarm frames and how the device should react. The parameters consist of 4 bytes, three most significant bytes are set according to the official Z-Wave protocol specification.
Parameter size	4B
Default value	[0x00, 0x00, 0x00, 0x00] (disabled)
Available values	**1B** [MSB] – Notification Type **2B** – Notification Status **3B** – Event/State Parameters **4B** [LSB] – action:
	0x00 – no action, **0xX1** – open, **0xX2** – close, **0x0X** – no action on LED frame, **0x1X** – LED frame blinks red, **0x2X** – LED frame blinks green, **0x4X** – LED frame blinks blue, **0x8X** – disable LED frame, **0xFX** – LED frame LAPD signal (red-white-blue)
31.	**Alarm configuration - 2nd slot**
Description	This parameter determines to which alarm frames and how the device should react. The parameters consist of 4 bytes, three most significant bytes are set according to the official Z-Wave protocol specification.
Parameter size	4B
Default value	[0x05, 0xFF, 0x00, 0x00] (Water Alarm, any notification, no action)
Available values	**1B** [MSB] – Notification Type **2B** – Notification Status **3B** – Event/State Parameters **4B** [LSB] – action:
	0x00 – no action, **0xX1** – open, **0xX2** – close, **0x0X** – no action on LED frame, **0x1X** – LED frame blinks red, **0x2X** – LED frame blinks green, **0x4X** – LED frame blinks blue, **0x8X** – disable LED frame, **0xFX** – LED frame LAPD signal (red-white-blue)

32.	Alarm configuration - 3rd slot
Description	This parameter determines to which alarm frames and how the device should react. The parameters consist of 4 bytes, three most significant bytes are set according to the official Z-Wave protocol specification.
Parameter size	4B
Default value	[0x01, 0xFF, 0x00, 0x00] (Smoke Alarm, any notification, no action)
Available values	**1B** [MSB] – Notification Type **2B** – Notification Status **3B** – Event/State Parameters **4B** [LSB] – action:
	0x00 – no action, **0xX1** – open, **0xX2** – close, **0x0X** – no action on LED frame, **0x1X** – LED frame blinks red, **0x2X** – LED frame blinks green, **0x4X** – LED frame blinks blue, **0x8X** – disable LED frame, **0xFX** – LED frame LAPD signal (red-white-blue)

33.	Alarm configuration - 4th slot
Description	This parameter determines to which alarm frames and how the device should react. The parameters consist of 4 bytes, three most significant bytes are set according to the official Z-Wave protocol specification.
Parameter size	4B
Default value	[0x02, 0xFF, 0x00, 0x00] (CO Alarm, any notification, no action)
Available values	**1B** [MSB] – Notification Type **2B** – Notification Status **3B** – Event/State Parameters **4B** [LSB] – action:
	0x00 – no action, **0xX1** – open, **0xX2** – close, **0x0X** – no action on LED frame, **0x1X** – LED frame blinks red, **0x2X** – LED frame blinks green, **0x4X** – LED frame blinks blue, **0x8X** – disable LED frame, **0xFX** – LED frame LAPD signal (red-white-blue)

34.	Alarm configuration - 5th slot
Description	This parameter determines to which alarm frames and how the device should react. The parameters consist of 4 bytes, three most significant bytes are set according to the official Z-Wave protocol specification.
Parameter size	4B
Default value	[0x04, 0xFF, 0x00, 0x00] (Heat Alarm, any notification, no action)
Available values	**1B** [MSB] – Notification Type **2B** – Notification Status **3B** – Event/State Parameters **4B** [LSB] – action:
	0x00 – no action, **0xX1** – open, **0xX2** – close, **0x0X** – no action on LED frame, **0x1X** – LED frame blinks red, **0x2X** – LED frame blinks green, **0x4X** – LED frame blinks blue, **0x8X** – disable LED frame, **0xFX** – LED frame LAPD signal (red-white-blue)
35.	**Alarm configuration – duration**
Description	This parameter defines duration of alarm sequence. When time set in this parameter elapses, alarm is cancelled, LED frame and relay restore normal operation, but do not recover state from before the alarm.
Parameter size	2B
Default value	600 (10min)
Available values	0 – infinite 1-32400 (1s-9h, 1s step) – duration

40.	First button – scenes sent
Description	This parameter determines which actions result in sending scene IDs assigned to them. Values can be combined (e.g. 1+2=3 means that scenes for single and double click are sent). Enabling scenes for triple click disables entering the device in learn mode by triple clicking.
Parameter size	1B
Default value	0 (no scenes)
Available values	1 – Key pressed 1 time 2 – Key pressed 2 times 4 – Key pressed 3 times 8 – Key hold down and key released
41.	**Second button – scenes sent**
Description	This parameter determines which actions result in sending scene IDs assigned to them. Values can be combined (e.g. 1+2=3 means that scenes for single and double click are sent). Enabling scenes for triple click disables entering the device in learn mode by triple clicking.
Parameter size	1B
Default value	0 (no scenes)
Available values	1 – Key pressed 1 time 2 – Key pressed 2 times 4 – Key pressed 3 times 8 – Key hold down and key released
60.	**Power reports – include self-consumption**
Description	This parameter determines whether the power measurements should include power consumed by the device itself.
Parameter size	1B
Default value	0 (not included)
Available values	0 – self-consumption not included 1 – self-consumption included

61.	Power reports – on change
Description	This parameter defines minimal change (from the last reported) in measured power that results in sending new report. For loads under 50W the parameter is irrelevant, report are sent every 5W change.
Parameter size	2B
Default value	15 (15%)
Available values	0 - reporting on change disabled 1-500 (1-500%, 1% step) – minimal change
62.	**Power reports – periodic**
Description	This parameter defines reporting interval for measured power. Periodic reports are independent from changes in value (parameter 61).
Parameter size	2B
Default value	3600 (1h)
Available values	0 – periodic reports disabled 30-32400 (30s-9h, 1s step) – time interval
65.	**Energy reports – on change**
Description	This parameter defines minimal change (from the last reported) in measured energy that results in sending new report.
Parameter size	2B
Default value	10 (0.1kWh)
Available values	0 - reporting on change disabled 1-500 (0.01-5kWh, 0.01kWh step) – minimal change
66.	**Energy reports – periodic**
Description	This parameter defines reporting interval for measured energy. Periodic reports are independent from changes in value (parameter 65).
Parameter size	2B
Default value	3600 (1h)
Available values	0 – periodic reports disabled 30-32400 (30s-9h, 1s step) – time interval

150.	Force calibration
Description	By setting this parameter to 2 the device enters the calibration mode. The parameter relevant only if the device is set to work in positioning mode (parameter 151 set to 1 or 2).
Parameter size	1B
Default value	0
Available values	0 - device is not calibrated 1 - device is calibrated 2 - force device calibration
151.	**Operating mode**
Description	This parameter allows adjusting operation according to the connected device.
Parameter size	1B
Default value	1
Available values	1 – roller blind (with positioning) 2 – Venetian blind (with positioning) 5 – roller blind with built-in driver 6 – roller blind with built-in driver (impulse)
152.	**Venetian blind – time of full turn of the slats**
Description	For Venetian blinds (parameter 151 set to 2) the parameter determines time of full turn cycle of the slats. The parameter is irrelevant for other modes.
Parameter size	4B
Default value	150 (1.5 seconds)
Available values	0-65535 (0 - 655.35s, every 0.01s) - time of turn

153.	Set slats back to previous position
Description	For Venetian blinds (parameter 151 set to 2) the parameter determines slats positioning in various situations. The parameter is irrelevant for other modes.
Parameter size	1B
Default value	1
Available values	0 – slats return to previously set position only in case of the main controller operation 1 – slats return to previously set position in case of the main controller operation, momentary switch operation, or when the limit switch is reached 2 – slats return to previously set position in case of the main controller operation, momentary switch operation, when the limit switch is reached or after receiving the Switch Multilevel Stop control frame
154.	**Delay motor stop after reaching end switch**
Description	The parameter determines the time after which the motor will be stopped after end switch contacts are closed.
Parameter size	2B
Default value	10 (1 second)
Available values	1-255 (0.1s - 25.5 seconds)
155.	**Motor operation detection**
Description	Power threshold interpreted as reaching a limit switch.
Parameter size	2B
Default value	10 (10W)
Available values	1-255 (1-255W) - report interval 0 - no detection

156.	Time of up movement
Description	This parameter determines the time needed for roller blinds to reach the top. For modes with positioning value is set automatically during calibration, otherwise, it must be set manually.
Parameter size	4B
Default value	6000 (60 seconds)
Available values	1-65535 (0.01 - 655.35 seconds)
157.	**Time of down movement**
Description	This parameter determines the time needed for roller blinds to reach the bottom. For modes with positioning value is set automatically during calibration, otherwise, it must be set manually.
Parameter size	4B
Default value	6000 (60 seconds)
Available values	1-65535 (0.01 - 655.35 seconds)

12: Z-Wave specification

Endpoint 1:

Generic Device Class: GENERIC_TYPE_SWITCH_MULTILEVEL

Specific Device Class: SPECIFIC_TYPE_CLASS_B_MOTOR_CONTROL

Description: control up/down

Endpoint 2:

Generic Device Class: GENERIC_TYPE_SWITCH_MULTILEVEL

Specific Device Class: SPECIFIC_TYPE_CLASS_B_MOTOR_CONTROL

Description: control tilt.

Switch Multilevel Command Class values refers to:

- 0x00 - fully close
- 0x63 - fully open

Supported Command Classes

Command Class	Version	Secure
COMMAND_CLASS_ZWAVEPLUS_INFO [0x5E]	V2	
COMMAND_CLASS_SWITCH_MULTILEVEL [0x26]	V4	YES
COMMAND_CLASS_ASSOCIATION [0x85]	V2	YES
COMMAND_CLASS_MULTI_CHANNEL_ASSOCIA-TION [0x8E]	V3	YES
COMMAND_CLASS_ASSOCIATION_GRP_INFO [0x59]	V2	YES
COMMAND_CLASS_TRANSPORT_SERVICE [0x55]	V2	
COMMAND_CLASS_VERSION [0x86]	V2	YES
COMMAND_CLASS_MANUFACTURER_SPECIFIC [0x72]	V2	YES
COMMAND_CLASS_DEVICE_RESET_LOCALLY [0x5A]	V1	YES
COMMAND_CLASS_POWERLEVEL [0x73]	V1	YES
COMMAND_CLASS_SECURITY [0x98]	V1	
COMMAND_CLASS_SECURITY_2 [0x9F]	V1	
COMMAND_CLASS_SUPERVISION [0x6C]	V1	
COMMAND_CLASS_METER [0x32]	V3	YES
COMMAND_CLASS_CONFIGURATION [0x70]	V1	YES
COMMAND_CLASS_CRC_16_ENCAP [0x56]	V1	

COMMAND_CLASS_NOTIFICATION [0x71]	V8	YES
COMMAND_CLASS_PROTECTION [0x75]	V2	YES
COMMAND_CLASS_MULTI_CHANNEL [0x60]	V4	YES
COMMAND_CLASS_CENTRAL_SCENE [0x5B]	V3	YES
COMMAND_CLASS_FIRMWARE_UPDATE_MD [0x7A]	V4	YES
COMMAND_CLASS_APPLICATION_STATUS [0x22]	V1	
COMMAND_CLASS_BASIC [0x20]	V1	YES

Multichannel Command Class

Command Class	Version	Secure
Endpoint 1		
COMMAND_CLASS_ZWAVEPLUS_INFO [0x5E]	V2	
COMMAND_CLASS_SWITCH_MULTILEVEL [0x26]	V4	YES
COMMAND_CLASS_ASSOCIATION [0x85]	V2	YES
COMMAND_CLASS_MULTI_CHANNEL_ASSOCIA-TION [0x8E]	V3	YES
COMMAND_CLASS_ASSOCIATION_GRP_INFO [0x59]	V2	YES
COMMAND_CLASS_SECURITY [0x98]	V1	
COMMAND_CLASS_SECURITY_2 [0x9F]	V1	
COMMAND_CLASS_SUPERVISION [0x6C]	V1	
COMMAND_CLASS_METER [0x32]	V3	YES
COMMAND_CLASS_NOTIFICATION [0x71]	V8	YES
COMMAND_CLASS_APPLICATION_STATUS [0x22]	V1	
Endpoint 2		
COMMAND_CLASS_ZWAVEPLUS_INFO [0x5E]	V2	
COMMAND_CLASS_SWITCH_MULTILEVEL [0x26]	V4	YES
COMMAND_CLASS_ASSOCIATION [0x85]	V2	YES
COMMAND_CLASS_MULTI_CHANNEL_ASSOCIA-TION [0x8E]	V3	YES
COMMAND_CLASS_ASSOCIATION_GRP_INFO [0x59]	V2	YES
COMMAND_CLASS_SECURITY [0x98]	V1	
COMMAND_CLASS_SECURITY_2 [0x9F]	V1	
COMMAND_CLASS_SUPERVISION [0x6C]	V1	
COMMAND_CLASS_APPLICATION_STATUS [0x22]	V1	

Notification Command Class

The device uses Notification Command Class to report different events to the controller (“Lifeline” group).

Notification Type	Event	Parameter	In endpoints
Power Management [0x08]	Over-current detected [0x06/V3]		Root, Endpoint 1
System [0x09]	System hardware failure with manufacturer proprietary failure code [0x03]	MP code: 0x01 [device overheat]	Root, Endpoint 1

Protection CC

Protection Command Class allows to prevent local or remote control of the outputs.

Type	State	Description	Hint
Local	0	Unprotected - The device is not protected, and may be operated normally via the user interface.	Buttons connected with outputs.
Local	2	No operation possible – button can not change relay state, any other functionality is available (menu).	Buttons disconnected from outputs.
RF	0	Unprotected - The device accept and respond to all RF Commands.	Outputs can be controlled via Z-Wave.
RF	1	No RF control – command class basic and switch binary are rejected, every other command class will be handled.	Outputs cannot be controlled via Z-Wave.

Meter CC

Same for Root, Endpoint 1 and Endpoint 2.

Meter Type	Scale	Rate Type	Precision	Size
Electric [0x01]	Electric_kWh [0x00] (default)	Import [0x01]	2	4
Electric [0x01]	Electric_W [0x02]	Import [0x01]	1	2

13: Parts compatibility

Available FIBARO parts		Included in FGWREU-111
Name	Symbol	
Walli Roller Shutter Unit	FG-WREU111-AS-8001	x
Switch Button with Lightguide	FG-WDSEU221-AS-8100	x
Switch Button Adapter	FG-WDSEU221-PP-0007	
Mounting Frame FIBARO/ GIRA	FG-Wx-AS-4001	x
Mounting Frame Legrand	FG-Wx-AS-4002	
Mounting Frame Schneider	FG-Wx-AS-4003	
Single Cover Plate	FG-Wx-PP-0001	x
Double Cover Plate	FG-Wx-PP-0003	
Triple Cover Plate	FG-Wx-PP-0004	

Parts required for GIRA System 55 (only with non-metalised outer surface: Standard 55, E2, Event, Event Clear) covers

Required FIBARO parts	
Name	Symbol
Walli Roller Shutter Unit	FG-WREU111-AS-8001
Adapter	FG-WDSEU221-PP-0007
Mounting Frame FIBARO/ GIRA	FG-Wx-AS-4001

Parts required for Legrand Céliane covers

Required FIBARO parts	
Name	Symbol
Walli Roller Shutter Unit	FG-WREU111-AS-8001
Adapter	FG-WDSEU221-PP-0007
Mounting Frame Legrand	FG-Wx-AS-4002

Parts required for Schneider Odace covers

Required FIBARO parts	
Name	Symbol
Walli Roller Shutter Unit	FG-WREU111-AS-8001
Mounting Frame Schneider	FG-Wx-AS-4003

14: Regulations

Legal Notices

All information, including, but not limited to, information regarding the features, functionality, and/or other product specification are subject to change without notice. Fibaro reserves all rights to revise or update its products, software, or documentation without any obligation to notify any individual or entity.

FIBARO and Fibar Group logo are trademarks of Fibar Group S.A. All other brands and product names referred to herein are trademarks of their respective holders.

Declaration of conformity

Hereby, Fibar Group S.A. declares that the device is in compliance with the essential requirements and other relevant provisions of Directive 2014/53/EU. The full text of the EU declaration of conformity is available at the following internet address: www.manuals.fibaro.com

WEEE Directive Compliance

Device labelled with this symbol should not be disposed with other household wastes. It shall be handed over to the applicable collection point for the recycling of waste electrical and electronic equipment.