Doorbell 6

ZW162

Used in this guide.

Articulos utilizados en este manual / Utilisé dans ce guide / In dieser Gebrauchsanweisung verwendete Bezeichnungen / Usato in questa guida / Gebruikt in deze handleiding / Används i den här handboken / Brukt i denne håndboken.

Important safety information.

Please read this and the guide(s) at support.aeotec.com/doorbell6 carefully. Failure to follow the recommendations set forth by Aeotec Limited may be dangerous or cause a violation of the law. The manufacturer, importer, distributor, and / or reseller will not be held responsible for any loss or damage resulting from improper use and disregard for any instructions in the guide.

Doorbell 6's Button offers IP55 protection and is suitable for outdoor use without direct exposure to heavy and penetrative rain. Button is intended for indoor use only. Keep away from heat and do not expose to flame. Chime is intended for indoor use in dry locations only. Do not use in damp, moist, and / or wet locations.

Warning: to prevent possible hearing damage, test only when wearing appropriate hearing protection.

Contains small parts; keep away from children.

Optimally installing Doorbell 6.

Doorbell 6 includes 2 separate components: Chime and Button. The two components communicate wirelessly and can be installed up to 120 metres / 393 feet apart. However, the wireless range is reduced by interference from competing wireless signals, doors, and walls. Before installing Doorbell 6, test your desired installation location for both Button and Chime first to ensure that a reliable wireless connection can be made between the 2 parts. ARx Button before affixing Chime.

Avoid exposing Button to direct sunlight where possible to avoid UV damage and reduced battery performance.

Quick start.

The following will step you through installing Doorbell 6 and connecting it to your Z-Wave network.

1. Select an installation location for Button. Do not yet install it.
2. Select an installation location for Chime. Do not yet install it.
3. Power on Chime via the provided power adapter; its LED will blink.
4. Power on Button.
   a. Remove the 2 screws from Button's rear to open its battery cover and install the provided CR2450 battery with the positive (+) on top.
   b. Replace Button's battery cover and the 2 screws.
5. Test the Doorbell 6's wireless connection by pressing Button to trigger a doorbell alert. Select an alternative installation location for Chime if the connection is poor.
   a. Should Button not trigger Doorbell 6 even at close range, they may not be synced.To pair them; press Doorbell 6's Action Button 3 times in quick succession; its LED will blink slowly 1 time and then be on state to indicate it has entered pairing mode.
   b. Press Ring Button 3 times in quick succession.
6. Set your Z-Wave gateway into its 'add device' mode in order to connect Doorbell 6 to your Z-Wave system. Refer to the gateway's manual if you are unsure of how to perform this step.
7. Connect Doorbell 6 to your Z-Wave gateway; press the Doorbell 6's Action Button once. If your Z-Wave gateway supports S2 encryption, enter the first 5 digits of DSK into your gateway's interface if /when requested. The DSK is printed on Doorbell 6's housing.
8. When Doorbell 6 successfully joins your Z-Wave network its LED will emit a solid light for 30 seconds and then turn off. Should Doorbell 6's LED continue to blink, an indication that it has failed to join your Z-Wave network; repeat steps 6 to 7. Contact us for further support if needed.
9. Install Button.
   a. Affix the mounting plate to the selected surface; affix it using either 2 x 30mm screws or double-sided tape.
   b. Lock your Button onto the mounting plate.
10. Affix Chime in the desired installation location using the provided mounting plate.
    a. Affix the mounting plate to the selected surface; affix it using either 3 x 30mm screws or double-sided tape.
    b. Lock your Chime onto the mounting plate.

Pre-loaded tones.

Tone #	Name	Use
1	Ding Dong	Doorbell
2	Ding Dong Tubular Bell	Doorbell
3	Traditional Apartment Buzzer	Doorbell
4	Electric Apartment Buzzer	Doorbell
5	Westminster Chimes (Hearing Enhanced)	Doorbell
6	Chimes (Hearing Enhanced)	Doorbell
7	Cuckoo (Hearing Enhanced)	Doorbell
8	Traditional Bell	Doorbell
9	Smoke Alarm (Low)	Safety
10	Smoke Alarm (High)	Safety
11	Fire Evacuation Buzzer	Safety
12	Carbon Monoxide Sensor	Safety
13	Klaxon	Safety
14	Klaxon (Deep)	Safety
15	Warning Tone	Safety
16	Tornado Siren	Safety
17	Alarm	Security
18	Deep Alarm Tone	Security
19	Alarm (Archangel tone)	Security
20	Alarm (Bird)	Security
21	Digital Siren	Security
22	Alert Series	Security
23	Ship Bell	Miscellaneous
24	Clock Buzzer	Miscellaneous
25	Christmas Tree	Miscellaneous
26	Gong	Miscellaneous
27	Single Bell Ting	Miscellaneous
28	Tonal Bell	Miscellaneous
29	Upwards Tone	Miscellaneous
30	Down Option	Miscellaneous

Doorbell 6 is now a part of your Z-Wave home control system. You can configure Doorbell 6, along with its automation buttons, via your Z-Wave system; please refer to your software's user guide for precise instructions.

Get help & learn more.

Should you encounter any problem with Doorbell 6, visit support.aeotec.com/doorbell6 or contact our support team via aeotec.com/contact. You can also learn more about Doorbell 6's features, configuration options, and technical specifications at the link.

Gateway compatibility.

To see if this device is known to be compatible with your Z-Wave gateway, please refer to aeotec.com/z-wave-gateways.

Español.

Información importante de seguridad.

Por favor, lea cuidadosamente este información y el manual en support.aeotec.com/doorbell6. El no seguir las recomendaciones establecidas por Aeotec Limited puede ser peligroso o constituir una violación de la ley. El fabricante, importador, distribuidor y / o revendedor no estará responsable por ninguna pérdida o daño que resulte de no cumplir cualquiera de las instrucciones contenidas en la guía. Aeotec 3 wave en una toma de tierra.

El Timbre para Puerta 6 ofrece protección de agua IP55 y es adecuado para su uso al aire libre sin exposición directa a lluvia fuerte y penetrante. El botón está fabricado con nylon; debe mantenerse lejos del calor y no exponerlo directamente al fuego. El Timbre está diseñado para su uso en espacios cerrados y secos. No utilizar en lugares con condiciones de humedad y / o húmedas.

Advertencia: para evitar posibles daños a la audición, pruébelo únicamente utilizando protección de audición adecuada.

Contiene partes pequeñas; mantener alejado de los niños.

Instalación óptima del Timbre para Puerta 6.

El Timbre para Puerta 6 incluye 2 componentes separados: una campana y un botón. Los dos componentes se comunican inalámbricamente y pueden instalarse hasta con 120 metros/393 pies de separación. Sin embargo, el rango inalámbrico puede reducirse por la interferencia de otras señales inalámbricas, puertas y paredes. Antes de instalar Doorbell 6, pruebe la ubicación de instalar el Timbre para Puerta 6 en primer lugar para asegurarse de que pueda realizarse una conexión inalámbrica fiable entre ambas partes. Pr el botón antes de la Campana.

Evite exponer el Botón a la luz directa del sol siempre que sea posible, para evitar los daños producidos por los rayos UV y una reducción del desempeño de la batería.

Inicio rápido.

El siguiente manual le guiará en la instalación del Doorbell 6 y su conexión a su red Z-Wave.

1. Seleccione una ubicación de instalación para el Botón. No lo instale aún.
2. Seleccione una ubicación de instalación para la Campana. No la instale aún.
3. Conecte la electricidad a la Campana utilizando el adaptador de corriente incluido; su luz LED parpadeará.
4. Conecte la electricidad al Botón.
   a. Retire los 2 tornillos de la parte posterior del Botón y abra la cubierta de la batería. La batería CR2450 ofrecida con el símbolo positivo (+) en la parte superior.
   b. Vuelva a colocar la cubierta de la batería y los 2 tornillos.
5. Pruebe la conexión inalámbrica Timbre para puerta 6 presionando el Botón para activar la alerta del timbre. Seleccione una ubicación alternativa de instalación para la Campana si la conexión es inadecuada.
   a. En caso de que el botón no active el Timbre 6 incluso en un rango corto, puede que no está sincronizado. Para emparejarlos; presione el botón de acción del Timbre 6 3 veces rápidamente. Su LED parpadeará lentamente 1 vez y luego estará encendido para indicar que ha entrado en modo emparejamiento.
   b. Presione el botón de timbre 3 veces en una sucesión rápida.
6. Configure su puerta de enlace Z-Wave en la modalidad de "agregar dispositivo" para conectar el Timbre para Puerta 6 a su sistema Z-Wave. Revise el manual de puerta de enlace si no está seguro de cómo realizar este paso.
7. Conecte el Timbre para Puerta 6 a su puerta de enlace Z-Wave; presione el Botón de Acción del Timbre para Puerta 6 una vez. Si su puerta de enlace Z-Wave admite encriptación S2, ingrese el primero 5 dígitos del DSK en la interfaz de la puerta de enlace si/cuando se le pida. El DSK se imprime en la carcasa del Timbre para Puerta 6.
8. Cuando el Timbre para Puerta 6 se haya unido exitosamente a su red Z-Wave, su luz LED emitirá un color sólido durante 30 segundos y después se apagará. En caso de que la luz LED del Timbre para Puerta siga parpadeando, no se ha podido unirse a su red Z-Wave; repita los pasos del 2 al 3 y, por favor, contáctenos para más apoyo en caso de ser necesario.
9. Instale el Botón.
   a. Fije la placa de montaje a la superficie seleccionada utilizando 2 o 3 tornillos de 30mm o cinta de doble cara.
   b. Bloquee su Botón en la placa de montaje.
10. Fije la Campana en la ubicación de instalación deseada utilizando la placa de montaje incluida.
    a. Fije la placa de montaje en la superficie seleccionada utilizando cinta de doble cara.
    b. Bloquee su Campana en la placa de montaje.

El Timbre para Puerta 6 ahora es parte de su sistema de control de hogar Z-Wave. Puede configurar tanto el dispositivo como las automatizaciones a través de su sistema Z-Wave; por favor, para obtener instrucciones más precisas revise el manual de usuario del Software.

Français.

Informations importantes concernant la sécurité

Veuillez lire attentivement ce document et le(s) guide(s) à l'adresse support.aeotec.com/doorbell6. Le non-respect des recommandations formulées par Aeotec Limited peut être dangereux ou entraîner une violation de la loi. Le fabricant, l'importateur, le distributeur et / ou le revendeur ne seront pas tenus responsables de toute perte ou dommage résultant du non-respect des instructions contenues dans ce guide ou dans d'autres documents.

Le Bouton de la Doorbell 6 offre une protection IP55 contre l'eau et convient pour une utilisation en extérieur sans exposition directe à une pluie battante et pénétrante. Le Bouton est destiné à un usage intérieur. Le garder à l'abri de la chaleur et ne pas l'exposer au feu. Chime est destiné à être utilisé à l'intérieur dans des endroits secs uniquement. Ne pas utiliser dans des endroits humides, moisis et / ou mouillés.

Attention : pour éviter d'éventuels dommages auditifs, testez-le uniquement lorsque vous portez une protection auditive appropriée.

Contient des petites pièces ; tenir à l'écart des enfants.

Installation optimale de la Doorbell 6.

La Doorbell 6 comprend 2 composants séparés : le Carillon et le Bouton.Les deux composants communiquent sans fil et peuvent être installés à 120 mètres / 393 pieds maximum. Cependant, la portée sans fil est réduite par l'interférence des signaux sans fil, des portes et des murs concurrents. Avant d'installer la Doorbell 6, testez d'abord l'emplacement d'installation souhaité pour le Bouton et le Carillon afin de vous assurer qu'une connexion sans fil fiable peut être établie entre les deux éléments. Fixez le Bouton avant de fixer le Carillon.

Évitez d'exposer le bouton à la lumière directe du soleil dans la mesure du possible pour éviter les dommages causés par les UV et une diminution des performances de la pile.

Démarrage rapide.

Les étapes suivantes vous guideront dans l'installation de Doorbell 6 et sa connexion à votre réseau Z-Wave.

1. Sélectionnez un emplacement d'installation pour le Bouton. Ne l'installez pas tout de suite.
2. Sélectionnez un emplacement d'installation pour le Carillon. Ne l'installez pas tout de suite.
3. Allumez le Carillon à l'aide de l'adaptateur d'alimentation fourni, son voyant LED clignotera.
4. Allumez le Bouton.
   a. Retirez les 2 vis à l'arrière du Bouton et ouvrez son couvercle ; la pile CR2450 fournie avec le symbole positif (+) sur le dessus.
   b. Replacez le couvercle du compartiment à piles et les 2 vis.
5. Testez la connexion sans fil de la Doorbell 6 en appuyant sur le Bouton pour déclencher une alerte de sonnerie du porte. Sélectionnez un autre emplacement d'installation pour le Carillon si la connexion est de mauvaise qualité.
   a. Si le Bouton ne déclenche pas la Sonnette de Doorbell 6 même à courte distance, il se peut qu'ils ne soient pas synchronisés. Pour les appairer, appuyez 3 fois de suite sur le bouton Action de la Doorbell 6 ; son voyant clignote lentement une fois, puis reste allumé pour indiquer qu'il est entré en mode appairage.
   b. Appuyez 3 fois sur le bouton Aeotec 3 fois de suite rapidement.
6. Réglez votre passerelle Z-Wave dans son mode 'ajouter un appareil' afin de connecter le Doorbell 6 à votre système Z-Wave. Reportez-vous au manuel de la passerelle si vous avez des doutes quant à la manière d'effectuer cette étape.
7. Connectez la Doorbell 6 à votre passerelle Z-Wave ; appuyez une fois sur le bouton d'action de la Doorbell 6. Si votre passerelle Z-Wave prend en charge le cryptage S2, entre les premiers chiffres du DSK dans l'interface de votre passerelle si /lorsque demandé. Le DSK est imprimé sur le boîtier de la Doorbell 6.
8. Lorsque la Doorbell 6 rejoint avec succès votre réseau Z-Wave, son voyant LED émet une lumière solide pendant 30 secondes, puis s'éteint. Si le voyant LED de la Doorbell 6 continue à clignoter, il n'a pas réussi à se joindre à votre réseau Z-Wave ; répétez les étapes 2 à 3 et veuillez nous contacter pour plus d'assistance si nécessaire.
9. Installez le Bouton.
   a. Fixez la plaque de montage sur la surface choisie ; fixez-la à l'aide de 2 vis de 20 mm ou de ruban adhésif double face.
   b. Verrouillez votre Bouton sur la plaque de montage.
10. Fixez le Carillon à l'emplacement de montage souhaité à l'aide de la plaque de montage fournie.
    a. Fixez la plaque de montage sur la surface choisie ; fixez-la à l'aide de 3 vis de 20 mm ou de ruban adhésif double face.
    b. Verrouillez votre Carillon sur la plaque de montage.

Le Doorbell 6 fait maintenant partie de votre système de contrôle à domicile Z-Wave. Vous pouvez configurer Doorbell 6, ainsi que vos automatismes et boutons, via votre système Z-Wave; veuillez vous référer au guide de l'utilisateur de votre logiciel pour des instructions précises.

Deutsch.

Wichtige Sicherheitsinformationen.

Bitte lesen Sie diesen Dokument und die Anleitung(en) unter support.aeotec.com/doorbell6 sorgfältig durch. Das Nichtbefolgen der von Aeotec Limited nicht empfohlenen Empfehlungen kann gefährlich sein oder gegen ein Gesetz verstoßen. Der Hersteller, Importeur, Vertreiber und/oder Wiederverkäufer haftet für keinen Verlust oder Schaden, der durch die Nichtbeachtung der Vorschriften in dieser Anleitung oder in anderem Material entsteht.

Der Button des Doorbell 6 bietet IP55 Schutzklasse und ist für den Außeneinsatz ohne direkte Einwirkung von starkem und durchdringendem Regen geeignet. Der Knopf ist aus Nylon gefertigt; halten Sie den Button von Hitze und offenen Flammen fern. Der Chime ist nur für den Innenbereich bestimmt. Verwenden Sie diesen nicht in einer dunklen, feuchten oder nassen Umgebung.

Achtung: Um mögliche Hörschäden zu vermeiden, sollten Sie das Testen der Doorbell nur mit einem geeigneten Gehörschutz durchführen.

Enthält Kleinteile, von Kindern fernhalten.

Optimale Montage der Doorbell 6.

Die Doorbell 6 besteht aus zwei separaten Einzelkomponenten: Klinger (Chime) und Taster (Button). Die beiden Komponenten kommunizieren drahtlos miteinander und können bis zu 30 Meter voneinander entfernt installiert werden. Die drahtlose Reichweite wird jedoch durch konkurrierende von anderen drahtlosen Signalen, Türen und Wänden reduziert. Bevor Sie die Doorbell 6 installieren, testen Sie zuerst Ihren gewünschten Installationsort für Button und Klingel,

um sicherzustellen, dass eine zuverlässige drahtlose Verbindung zwischen den beiden Komponenten hergestellt werden kann. Installieren Sie den Button bevor Sie die Klingel befestigen.

Verwenden Sie es nicht mit Möglichkeit, den Button direkten Sonnenlicht auszusetzen, um UV-Schäden und eine verminderte Batterieleistung zu vermeiden.

Schnellstart.

Im Folgenden werden Sie Schritt für Schritt durch die Installation und das Verbinden der Doorbell 6 mit einem Z-Wave Netzwerk geführt.

1. Wählen Sie einen Installationsort für den Button aus. Installieren Sie diesen vorerst noch nicht.
2. Wählen Sie einen Installationsort für die Klingel aus. Installieren Sie diese vorerst noch nicht.
3. Schließen Sie die Klingel an das mitgelieferte Netzteil an. Die LED der Klingel blinkt nun.
4. Den Button aktivieren.
   a. Entfernen Sie die beiden Schrauben auf der Rückseite des Buttons und Öffnen Sie die Abdeckung. Setzen Sie die mitgelieferte CR2450 Batterie mit dem Pluss (+) nach oben ein.
   b. Batteriebedeckung. Setzen Sie die mitgelieferte CR2450 Batterie mit dem Pluss (+) nach oben ein.
5. Testen Sie die drahtlose Verbindung zwischen Button und Klingel. Um den Button drücken, um einen Klingelstatus auszulösen. Wenn Sie den Button nicht hören, prüfen Sie den allgemeinen Installationsort für die Klingel aus.
6. Wenn Sie mit dem Ergebnis zufrieden sind, in direkter Nähe nicht ausließen, so sind diese eventuell nicht miteinander verbunden. Lesen Sie bitte installierten Zu verbinden, drücken Sie die Aktionstaste der Klingel 3 mal schnell. Die LED blinkt 1 Mal langsam und leuchtet dann, um anzuzeigen, dass der Pairing-Modus abgeschlossen wurde.
   b. Drücken Sie nun den Aeotec Button 3 mal schnell.
7. Schließen Sie Ihre Z-Wave Zentrale in den „Zentral hinzufügen" Modus, um die Doorbell 6 mit Ihrem Z-Wave System zu verbinden. Wenn Sie unsicher sind, wie man diesen Schritt durchführt, nehmen Sie die Anleitung Ihrer Z-Wave Zentrale zur Hand.
8. Drücken Sie die Aktionstaste der Klingel erneut, um die Klingel zu verbinden. Wenn Ihr Z-Wave Netzwerk über Sicherheitsverschlüsselungen verfügt, wird der Beitritt des ersten 5 Zifern des QSK (Sicherheitscode) in die Schnittstelle Ihres Gateways ein. Der QSK (Sicherheitscode) ist auf dem Gehäuse der Doorbell 6 aufgedruckt.
9. Wenn die Doorbell 6 erfolgreich mit Ihrem Z-Wave Netzwerk angeschlossen wurde, leuchtet für 30 Sekunden eine ertreffende LED und schaltet sich anschließend aus. Sollte die Doorbell 6 nicht erfolgreich sein, wird die LED für 1 Sekunde ein Z-Wave Netzwerk verbinden; wiederholen Sie den Vorgang ab Schritte 6 und 7 oder kontaktieren Sie uns bitte für weitere Unterstützung, falls Sie Probleme erfahren.
10. Button montieren.
    a. Befestigen Sie die Montageplatte an der ausgewählten Oberfläche entweder mit den 2 x 20 mm Schrauben oder doppelseitigem Klebeband.
    b. Verwenden Sie Ihren Button auf der Montageplatte.
10. Befestigen Sie die Klingel an der gewünschten Stelle mit der mitgelieferten Montageplatte C.
    a. Befestigen Sie die Montageplatte an der ausgewählten Oberfläche entweder mit den 2 x 20 mm Schrauben oder doppelseitigem Klebeband.
    b. Befestigen Sie nun die Klingel auf der Montageplatte.

Die Doorbell 6 ist jetzt eine Komponente Ihres Z-Wave Smart Home Systems. Sie können das Gerät jetzt seine Automatisierungen nun über Ihre Z-Wave Zentrale konfigurieren. Nehmen Sie dazu bitte das Handbuch Ihrer Z-Wave Zentrale zur Hand und folgen Sie den Anweisungen für eine Automatisierung.

Italiano.

Informazioni importanti per la sicurezza.

Si prega di leggere attentamente il presente documento e la guida su www.aeotec.com/doorbell6 prima di installare il prodotto. Le informazioni contenute indicate da Aeotec Limited può essere pericolose, o causare violazione della legge. Inoltre, impossibilita distribuire o / o rivendittore non saranno considerati responsabili per alcuna perdita o danno derivante dal mancato rispetto di quanto riportato nel presente documento o altro materiale.

Button è provvisto di certificazione IP55 ed è utilizzabile all'esterno evitando l'esposizione diretta alle intemperie. Installare il ricevitore in nylon; tenerlo lontano da fiamme e fonti di calore. Chiline è destinato esclusivamente a un uso interno. Non utilizzare in luoghi bagnati o umidi.

Contiene parti piccole; tenere lontano dalla portata dei bambini.

Attenzione: per prevenire possibili danni all'udito, testare il dispositivo utilizzando esclusivamente protezioni acustiche adeguate.

Installare Doorbell 6 in modo ottimale.

Doorbell 6 è composto da 2 dispositivi separati; Chime e Button. L due dispositivi comunicano in wireless o possono essere collegati tramite Z-Wave mesh. Tuttavia, la portata del wireless può essere ridotta da interferenze con altri segnali wireless, porte e pareti. Prima di installare Doorbell 6 in modo permanente, è consigliabile testare per assicurarsi una connessione wireless stabile. Installa Button prima di installare Chime.

Evitare l'esposizione diretta di Button alla luce solare quando possibile per evitare possibili danni da raggi UV e influenzare l'autonomia della batteria.

Avvio rapido.

Questo segue accompagnamento attraverso l'installazione di Doorbell 6 e la relativa connessione alla rete Z-Wave.

1. Scegli dove installare Button. Non installarlo ancora.
2. Scegli dove installare Chime. Non installarlo ancora.
3. Accendi Chime utilizzando l'adattatore incluso. Il suo LED lampeggerà.
4. Accendi Button.
   a. Rimuovi le 2 viti del retro di Button e aprirl il coperchio della batteria. Posiziona la batteria CR2450 con il lato positivo (+) rivolto verso l'alto.
   b. Riposiziona il coperchio della batteria e le 2 viti.
5. Testa la connessione wireless di Doorbell 6 premendo Button per attivare l'allarme del campanello. Bisogna sì un lungo chime; di installazione nel caso la connessione sia scarsa.
   a. Nel caso in cui Button non attivi Doorbell 6 anche a distanza ravvicinata, è possibile che i due dispositivi non siano accoppiati. Premere Button 3 volte in rapida successione. Il suo dispositivo Doorbell 6 in rapida successione. Il LED lampeggerà lentamente per indicare che l'accoppiamento è stato completato. Ora, premere Button 3 volte in rapida successione. Il suo LED lampeggerà lentamente 1 volta e quindi si accenderà per indicare che è entrato in modalità di abbinamento.
   b. Premi quindi Button Aeotec 3 volte in rapida successione.
6. Importate il gateway di Z-Wave sulla modalità "aggiungi dispositivo" al fine di collegare il Doorbell 6 al sistema Z-Wave. In caso di dubbio, consultare il manuale del gateway o consultare il manuale del gateway.
7. Collega Doorbell 6 al tuo gateway Z-Wave; premi una volta il tasto di accensione di Doorbell 6. Nel caso il tuo gateway Z-Wave supporti la crittografia S2, inserire le prime 5 cifre del QSK. Il QSK (codice di sicurezza) è stampato sulla parte posteriore di Doorbell 6.
8. Una volta che Doorbell 6 sarà connesso con successo alla rete Z-Wave, il suo LED emetterà una luce continua per 30 secondi per poi spegnersi. Nel caso il LED continui a lampeggiare la procedura di connessione al network Z-Wave non avrà successo; ripeti i passaggi 2 e 3 e contatti il nostro caso sia necessario ulteriore supporto.
9. Installa Button.
   a. Fissa la plastra di montaggio dalla superficie scelta, utilizza 2x viti da 20mm oppure del nastro bisadesivo.
   b. Fissa il tuo Button sulla plastra di montaggio.
10. Fissa Chime nel luogo di installazione desiderato. Utilizzando la plastra di montaggio inclusa.
   a. Fissa la plastra di montaggio alla superficie scelta, utilizza 2 viti da 20mm oppure del nastro bisadesivo.
   b. Fissa il Chime sulla plastra di montaggio.

A questo punto Doorbell 6 è parte del sistema di controllo domotico di Z-Wave. È possibile configurarlo e automatizzarlo attraverso il sistema Z-Wave; per istruzioni precise, consultare la guida utente del software.

Nederlands.

Belangrijke veiligheidsinformatie.

Lees dit en de handleiding(en) op support.aeotec.com/doorbell6 zorgvuldig door. Het niet opvolgen van de informatie aangeven of anderszins in de handleiding kan leiden tot een overtreding van de wet. Bovendien, De fabrikant, importeur, distributeur en / of verkoper kan niet aansprakelijk worden gesteld voor verlies of schade als gevolg van het niet opvolgen van instructies in deze handleiding of anderszins.

De Knop van Doorbell 6 bezit IP55 waterbescherming en is geschikt voor buitengebruik zonder directe blootstelling aan zware en ondersteunende regen. De Knop is gemaakt van nylon; zit de buurt van hitte houden en niet aan vuur blootstellen. De Bel is alleen bedoeld voor gebruik binnenshuis, in droge locaties. Niet gebruiken op vochtige, klamme en/of natte locaties.

Waarschuwing: om mogelijke gehoorbeschadiging te voorkomen, test eerst wanneer u de juiste gehoorbeschermers aanwezig.

Bevat kleine onderdelen; uit de buurt van kinderen houden.

Doorbell 6 optimaal installeren.

Doorbell 6 bevat uit twee onderstaande componenten; de Bel en Knop. De twee onderdelen communiceren draadloos of kunnen worden verbonden via Z-Wave mesh. Draadloze bereik kan worden geïnstalleerd. Het draadloze bereik wordt echter verminderd door tussenkomst van andere draadloze signalen, deuren en muren. Voordat u Doorbell 6 permanent installeert, is het verstandig om te testen of er een stabiele verbinding is. Installeer de Knop eerst en weer voordat u de Bel installeert.

Blaat weer mogelijk de Knop niet bloot aan direct zonlicht om UV-schade en vermindende batterijprestaties te voorkomen.

Snelstart.

De onderstaande beschrijving helpt u bij het installeren van Doorbell 6 en het verbinden met uw Z-Wave netwerk.

1. Kies een installatie locatie voor de Knop. Installeer hem nog niet.
2. Kies een installatie locatie voor de Bel. Installeer hem nog niet.
3. Schakel de Bel in via de meegeleverde stroomadapter, de LED zal gaan knipperen.
4. Schakel de Knop in.
   a. Verwijder de 2 schroeven aan de achterkant van de Knop om de batterijdeg te openen en meegeleverde CR2450 batterij met de positieve (+) zijde naar boven te plaatsen.
   b. Vervang de batterijdekje en de 2 schroeven.
5. Test de draadloze verbinding van de Doorbell 6 door op de Knop te klikken en zo een deurbel waarschuwing te activeren. Als u de deurbel niet alle en weer hoort, dan is uw installatie locatie voor Bel misschien niet optimaal genoeg. Pas de Bel aan.
   a. Indien de Knop Doorbell 6 niet in werking stelt, zelfs niet op korte afstand, kan het zijn dat ze nog niet gekoppeldmaakt zijn. Om te koppelen: Druk 3 maal snel aan/uit op de Knop. Uw LED zal langzaam knipperen om aan te geven dat de koppeling is gelukt. Druk nu 3 maal snel aan/uit op de Knop om Doorbell 6 in de koppelingsmodus te gaan.
   b. Druk 3 keer achter elkaar op de Aeotec Knop.
6. Stel uw Z-Wave-gateway in de modus 'apparaat toevoegen' om Doorbell 6 aan te sluiten op uw Z-Wave-netwerk. Raadpleeg de handleiding van de gateway als u niet zeker weet hoe u deze stap moet uitvoeren.
7. Verbind Doorbell 6 met uw Z-Wave-poort; klik eenmaal op de Aeotec Knop van Doorbell 6. Indien uw Z-Wave-poort S2 encryptie ondersteunt, voert u de eerste 5 cijfers van de QR-code in de interface van uw poort als / wanneer hiernaar gevraagd wordt.
8. Wanneer Doorbell 6 is gekoppeld met uw Z-Wave-netwerk is verbonden, zal de LED gedurende 30 seconden een effen kleur weergeven en vervolgens uitgaan. Indien de LED van de Doorbell 6 blijft knipperen, is de verbinding met uw Z-Wave-netwerk niet gelukt. Herhaal stap 2 en 3 en neem contact met ons op voor verdere ondersteuning indien nodig.
9. Knop installeren
   a. Bevestig de montageplaat op het geselecteerde oppervlakte; bevestig het met behulp van 2 x 20mm schroeven of dubbelzijdig plakband.
   b. Plaats uw Knop op de montageplaat.
10. Bevestig de Bel op de gewenste installatielocatie met behulp van de meegeleverde Aeotec Montageplaat.
   a. Bevestig de montageplaat op het geselecteerde oppervlakte; bevestig het met behulp van 3 x 20 mm schroeven of dubbelzijdig plakband.
   b. Tik op de Bel op de montageplaat.

Doorbell 6 is nu onderdeel van uw Z-Wave thuisbesturingssysteem. U kunt Doorbell 6 in combinatie met uw automatiseringen en gebruiken, configureren via uw Z-Wave-systeem; raadpleeg de gebruikershandleiding van uw software voor uitgebreide instructies.

Svenska.

Viktig säkerhetsinformation.

Läs igenom ett eller flera av dokumenten på support.aeotec.com/doorbell6 noggrant. Underlåtenhet att följa informationen som anges eller i handledningen kan vara ett brott mot lagen i vissa fall. Tillverkaren, importören, distributören och/eller återförsäljaren kan inte anses vara ansvarig för eventuella förluster eller skador som uppstår om du inte följer instruktionerna i denna handledning eller i andra material.

Doorbell 6 Knapp erbjuder IP55 vattenskydd och är lämplig för utomhusbruk utan direkt exponering för tung och genomträngande regn. Knappen är konstruerad med nylon; håll borta värme/ljuskällor och utsätt inte för öppen lågor. Ringer är endast avsedd för inomhusbruk på torra platser. Använd inte i fisktu, fuktiga och/eller våta miljöer.

Varning: För att förhindra eventuell hörselskada, testa ensidet med lämpliga hörselskydd innehåller små delar; håll borta från barn.

Optimal installation av Doorbell 6.

Doorbell 6 innehåller 2 separata komponenter; Knappen och Klocka. De två komponenten kommunicerar trådlöst och kan installeras upp till 30 meter från varandra. Det trådlösa avståndet reduceras dock av störningar från konkurrerande trådlösa signaler, dörrar och väggar. Innan du installerar Doorbell 6, testa både knappen och klockpipet för att försäkra installationsplats för att det ska finnas en stabil anslutning mellan dem. Installera knappen först och sedan klockan innan du sätter ut klockapipet.

Undvik att utsätta knappen för direkt solljus om det är möjligt, detta förhindrar UV-skador och minskad batteriprestanda.

Snabbstart.

Följande kommer att vägleda dig genom installationen av Doorbell 6 och anslutning till ditt Z-Wave-nätverk.

1. Välj en installationsplats för Knappen. Montera den inte ännu.
2. Välj en installationsplats för Klockpipet. Montera det inte ännu.
3. Slå på Klockpipet med den medföljande strömadaptern, det LED kommer blinka.
4. Slå på Knappen.
   a. Ta bort de två skruvarna från Knappens baksida och öppna batteriluckan. Det medföljande CR2450-batteriet placeras med positivt (+) uppåt.
   b. Sätt tillbaka batteriluckan och de 2 skruvarna.
5. Testa Doorbell 6 trådlösa anslutning genom att trycka på Knappen för att aktivera klockpipet. Om du inte hör en ringsignal, bör du kontrollera din installationsplats för Klockapipet.
   a. Om Knappen inte utlöser Doorbell 6 vid på nära håll kan de inte synkroniseras. För att para den, tryck på Doorbell 6 Action-knapp 3 gånger i snabb följd, dess LED lampa blinkar långsamt för att ange att den har gått i ihopparningsläge. Tryck sedan parkopplad igen 3 gång och sedan vara på tillstånd för att indikera att det har skivits in i parningsläge.
   b. Tryck på Aeotec knappen 3 gånger i snabb följd.
6. Sätt din Z-Wave-Gateway till läget 'lägg till enheter' för att ansluta Doorbell 6 till ditt Z-Wave-nätverk. Om du inte vet hur du ska göra detta, läs i din gateway-manual. Ett LED-ljus ska tändas.
7. Koppla Doorbell 6 till din Z-Wave-gateway; tryck på Doorbell 6 Action-Knapp en gång. Om din Z-Wave-gateway stödjer S2-kryptering, ange de 5 siffrorna i QR-koden som du ser i din webbsida. Du hittar QR-koden på baksidan av Doorbell 6.
8. När Doorbell 6 lyckas gå med i ditt Z-Wave nätverk kommer det LED lysa en fast färg i 30 sekunder och vedan slängas av. Om Doorbell 6 LED skulle fortsätta blinka har den inte lyckats gå med i ditt Z-Wave nätverk; repetera steg 2 till 3 och kontakta oss gärna för vidare support om det behövs.
9. Montera Knappen.
   a. Fäst montageplattan på den valda ytan; använd antingen 2 x 20mm skruvar eller dubbelsidig tejp.
   b. Lås fast Knappen på montageplattan.
10. Fäst Klockapipet på den önskade installationsplatsen med det medföljande monteringsplattan.
   a. Fäst montageplattan på den valda ytan; använd antingen 2 x 20mm skruvar eller dubbelsidig tejp.
   b. Fäst Klockapipet på montageplattan.

Doorbell 6 är nu en del av ditt Z-Wave hemkontrollsystem. Du kan konfigurera den och dess automationer via ditt Z-Wave-system; Se programvarans bruksanvisning för exakta instruktioner.

Declaration of Conformity. Aeotec Limited declares that ZW162 is in compliance with the essential requirements and other relevant provisions of RED 2014/53/EU, RoHS 2011/65/EU, EC 6253:2008, EN 50581:2012 and EN 62479:2010. The full text of the EU declaration is available at: support.aeotec.com/doorbell6/doc

Frequency. Aeotec Limited declares that this product is designed to operate between 869.40 & 926.3 MHz depending on local restrictions. It uses up to 8.01 dBm EIRP transmit power, enabling wireless connectivity. Full information on the specifications of this product are available at support.aeotec.com/doorbell6/spec

Declaración de conformidad. Aeotec Limited declara que el ZW162 está en cumplimiento de los requisitos esenciales y otras disposiciones relevantes de RED 2014/53/EU, RoHS 2011/65/EU, EC 6253:2008, EN 50581:2012 y EN 62479:2010. El texto completo de esta declaración está disponible en support.aeotec.com/doorbell6/doc

Especificaciones. Los dispositivos Z-Wave operan entre 869.40 y 926.3 MHz dependiendo de las restricciones locales. Puede encontrar la información completa sobre las especificaciones de este dispositivo en support.aeotec.com/doorbell6/spec

Declaration de conformité. Aeotec Limited déclare que le ZW162 est conforme aux exigences essentielles dispositions pertinentes de la RED 2014/53/EU, RoHS 2011/65/EU, EC 6253:2008, EN 50581:2012. Le texte intégral de la déclaration est disponible à l'adresse support.aeotec.com/doorbell6/doc

Spécifications. Les appareils Z-Wave fonctionnent entre 869,40 et 926,3 MHz en fonction des restrictions locales. Informations complètes sur les spécifications et les certifications des appareils sur support.aeotec.com/doorbell6/spec

Konformitätserklärung. Aeotec Limited erklärt, dass die ZW162 den grundlegenden Anforderungen und den anderen relevanten Bestimmungen der RED 2014/53/EU, RoHS 2011/65/EU, EC 6253:2008, EN 50581:2012 entspricht. Der vollständige Wortlaut der Erklärung ist unter folgender Internetadresse support.aeotec.com/doorbell6/doc verfügbar.

Spezifikationen. Z-Wave Geräte arbeiten zwischen 869.40 und 926.3 MHz in Abhängigkeit von lokalen Beschränkungen. Es strahlt bis zu 8.01 dBm EIRP Sendeleistung ab, was eine drahtlose Verbindung ermöglicht. Vollständige Informationen über Gerätespezifikationen und Zertifizierungen finden Sie auf support.aeotec.com/doorbell6/spec

Dichiarazione di conformità. Aeotec Limited dichiara che ZW162 è conforme ai requisiti essenziali e altre disposizioni pertinenti di RED 2014/53/EU, RoHS 2011/65/EU, EC 6253:2008, EN 50581:2012. Il testo completo della dichiarazione è disponibile su support.aeotec.com/doorbell6/doc

Specifiche tecniche. I dispositivi Z-Wave funzionano tra 868.40 e 926.3 MHz in base alle restrizioni locali. Per informazioni complete sulle specifiche e certificazioni dei dispositivi su support.aeotec.com/doorbell6/spec

Conformiteitsverklaring. Aeotec Limited verklaart dat ZW162 voldoet aan alle essentiële vereisten en andere bepalingen van de Richtlijn radiocapaciteur 2014/53/EU, Richtlijn RoHS 2011/65/EU, EC 6253:2008, EN 50581:2012. De volledige tekst van de verklaring is beschikbaar vanaf support.aeotec.com/doorbell6/doc

Specificaties. Z-Wave-apparaten werken tussen 869,40 en 926,3 MHz, afhankelijk van lokale beperkingen. Meer informatie over specificaties en certificeringen is te vinden op support.aeotec.com/doorbell6/spec

Declaración de Aversmannismeke. Aeotec Limited deklarerer at ZW162 overensstemmer med de væsentlige krav og andre relevante bestemmelser i RED 2014/53/EU, RoHS 2011/65/EU, EC 6253:2008, EN 50581:2012. Den fuldstændige tekst for deklarationen er tilgængelig på support.aeotec.com/doorbell6/doc

Specifikationer. Z-Wave-enheterna kan fungera mellan 868,40 och 926,3 MHz, beroende på lokala restriktioner. Fullständiga specifikationer och enhetsspecifikationer och certifieringar finns på support.aeotec.com/doorbell6/specs

© & ™ Aeotec Limited.

Version: FT501016200001 - AB

Z-WAVE PLUS

FCC ID: 2AOGZW162

In Europe contact Aeotec Group GmbH, Grofe Johannisstraße 7, 20457 Hamburg, Germany.

RoHS

Add more Buttons to Doorbell 6.

Doorbell 6 supports up to 3 Buttons.

Find out more:
aeotec.com/buy

Doorbell 6

Table of Content

1 INTERFACES & ACCESSORIES 3

2 FEATURES & SPECIFICATIONS 4

2.1 Chime 4

2.2 Button 5

3 PRODUCT QUICK START 6

3.1 Important safety information 6

3.2 How to add Chime into Z-Wave network 6

3.3 How to remove Chime from Z-Wave network 6

3.4 How to factory reset Chime 7

3.5 How to factory reset Button 7

3.6 How to install Chime 7

3.7 How to install Button 7

3.8 How to pair Button 8

3.9 How to unpair Button 9

4 SOFTWARE FUNCTION DEFINITION 10

4.1 User Behavior Interaction 10

4.2 Supplementary Explanation about Button 12

4.3 Announced Command Classes in NIF 12

4.4 Basic Command Class mapping 13

4.5 Z-Wave Plus Info 13

4.6 Manufacturer Specific 13

4.7 Version 13

4.8 Notification 13

4.9 Multi Channel 14

4.9.1 Endpoint Capability 14

4.9.2 Endpoint Priority Definition 14

4.9.3 Endpoint responses to receiving Notification Report 14

4.10 Association Group Info 16

4.11 Configuration 18

1 INTERFACES & ACCESSORIES

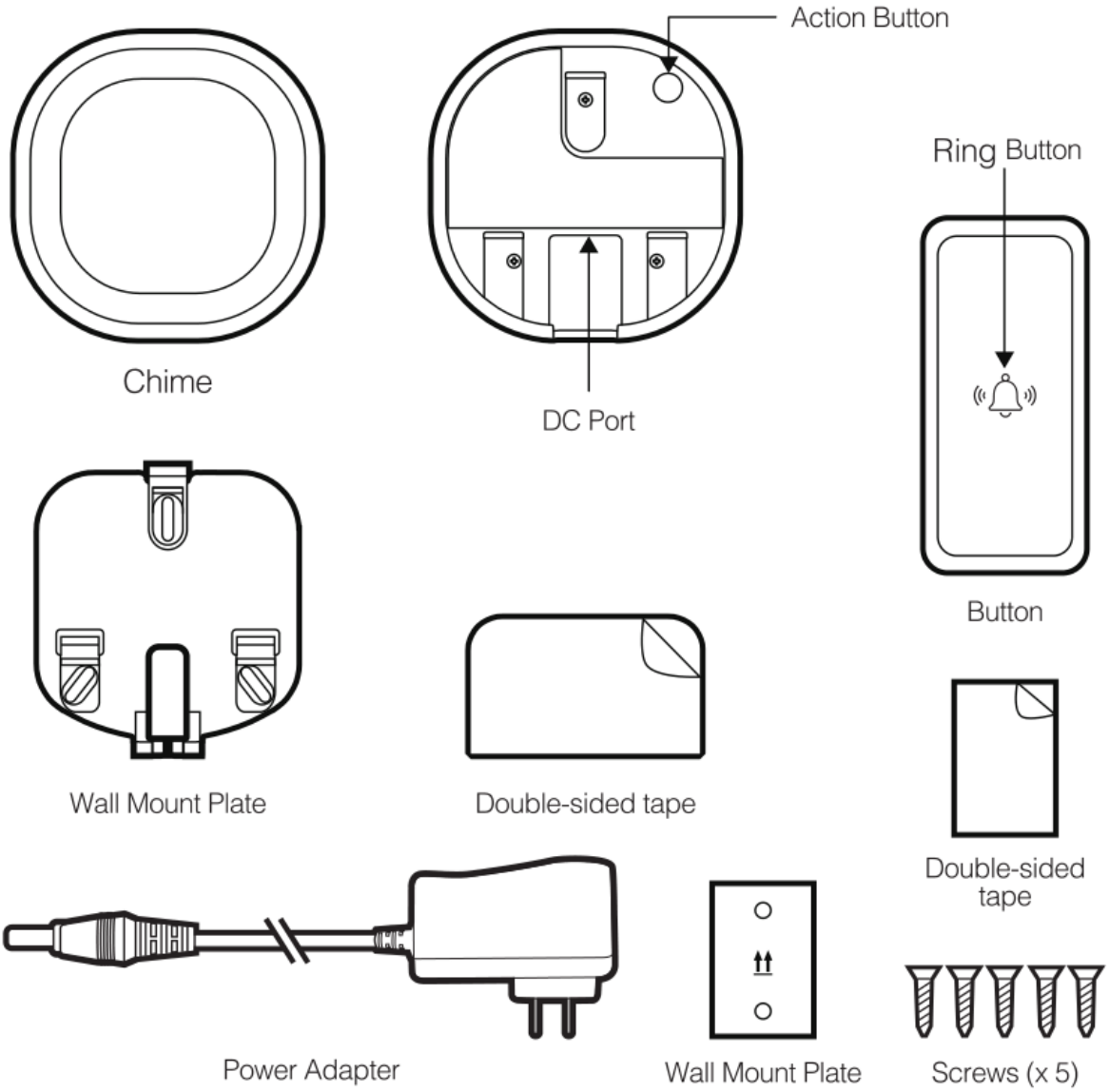

Terminology	Description
Chime	A component based on Z-Wave and 433.92MHz/FSK technology, and it can be used to play tone when triggered by Z-Wave Command or paired Button. ● Refer to Section 2.1 for details.
Button	A component based on 433.92MHz/FSK technology, and it can be used to wireless control Chime to play tone. ● Refer to Section 2.2 for details.
Action Button	A button in Chime, and it can be used for networking, resetting, and pairing Button, etc. ● Refer to Section 4.1 for details.
Ring Button	A button in Button, and it can be used for wireless controlling Chime to play tone. ● Refer to Section 4.2 for details.

2 FEATURES & SPECIFICATIONS

2.1 Chime

Parameter	Value
Product Identifier	ZW162
Dimensions	76*76*38.5mm
Weight	100g
Color	White
Shell Material	PC-6600
Shell Surface Treatment	Bright scrub
Shell Fire-proof Level	UL94 V-0
Waterproof and Dustproof	Rated IP20 under IEC standard 60529
Operating Temperature	32~104°F (0~40°C)
Relative Humidity	8%~80%
Wireless Technology	Z-Wave (Between Chime and Controller), 433.92MHz/FSK(Between Chime and Button)
Z-Wave Plus	Yes
Z-Wave Module	ZM5101
Z-Wave Version	6.71.03
Z-Wave Library Type	Enhanced 232 Slave
Z-Wave Device Type	Sound Switch
Z-Wave Role Type	Always On Slave
Security Class	Non-Security, S0, S2 Unauthenticated, and S2 Authenticated
Smart Start Compatible	No
Over The Air (OTA)	Support
Multi Channel Device	Yes
Association	Support
Factory Reset	Support
Power-down Memory	Support
Z-Wave Antenna Distance	30m (Indoor) /150m (Outdoor). Between Chime and Controller.
Button Control Distance	120m (Barrier-free sight line distance). Between Chime and Button.
Indicator Light Color	White
Indicator Light Color Temperature	5500K
Indicator Light Power	2W
Buttons and Connectors	Action Button (x1) DC Port (x1)
Input Voltage	DC 5V/2A Power Adapter
Battery	Quantity: 1 Model: PT502035 Capacity: 400mAh Detachable: No Chargeable: Yes. Charging via Power Adapter. Endurance: 4 hours
Working Current	80mA
Standby Current	70mA
Built-in Sensors	Vibration Sensor
Supported Paired Buttons	Max: 3
Tones Storage Size	16M
Supported Tones	Max: 30. No interface to replace the built-in tones. If you want to change these built-in tones, please contact us to customize.
Tone Effect Configurable	Support
Light Effect Configurable	Support

Volume	Max: 105dB
Volume Adjustable	Support
Safety Certifications	US: FCC ID, FCC SDOC EU: CE-EMC, CE-RED, CE-LVD, Battery AU: RCM

2.2 Button

Parameter	Value
Product Identifier	ZW166
Dimensions	85*38*14mm
Weight	35g
Color	White
Shell Material	ABS PA757
Shell Surface Treatment	Bright scrub
Shell Fire-proof level	UL94 HB
Waterproof and Dustproof	Rated IP55 under IEC standard 60529
Operating temperature	32~104°F (0~40°C)
Relative Humidity	8%~80%
Wireless Technology	433.92MHz/FSK(Between Chime and Button)
Button Control Distance	120m (Barrier-free sight line distance). Between Chime and Button.
Indicator Light Color	White
Buttons and Connectors	Ring Button(x1)
Input Voltage	3V lithium battery
Battery	Quantity: 1 Model: CR2450 Capacity: 630mAh Detachable: Yes Chargeable: No Endurance: 2 years
Working Current	20mA
Standby Current	0.1uA
Safety Certifications	US: FCC ID EU: CE-RED, CE-LVD AU: RCM

3 PRODUCT QUICK START

3.1 Important safety information

Please read this Engineering Specification carefully for correct and effective use.

Failure to follow the recommendations set forth by AEOTEC Limited may be dangerous or cause a violation of the law. The manufacturer, importer, distributor, and/or reseller will not be held responsible for any loss or damage resulting from not following any instruction in this guide or in other materials.

Doorbell 6 includes 2 separate components: **Chime** and **Button**. Chime is intended for indoor use in dry locations only. Do not use in damp, moist, and/or wet locations. Button offers IP55 water protection and is suitable for outdoor use without direct exposure to heavy and penetrative rain. Button is constructed with nylon; away from heat and do not expose to flame.

Warning:

To prevent possible hearing damage, test only when wearing appropriate hearing protection.

Contains small parts; keep away from children.

3.2 How to add Chime into Z-Wave network

This product supports Security 2 Command Class. While a Security S2 enabled Controller is needed in order to fully use the security feature. This product can be included and operated in any Z-Wave network with other Z-Wave certified devices from other manufacturers and/or other applications. All non-battery operated nodes within the network will act as repeaters regardless of vendor to increase reliability of the network.

1. Set your Z-Wave Controller into its 'Add Device' mode in order to add Chime into your Z-Wave system. Refer to the Controller's manual if you are unsure of how to perform this step.

2. Power on Chime via the provided power adapter; its LED will be breathing white light all the time.

3. Click Chime Action Button once, it will quickly flash white light for 30 seconds until Chime is added into the network. It will become constantly bright white light after being assigned a NodeID.

4. If your Z-Wave Controller supports S2 encryption, enter the first 5 digits of DSK into your Controller's interface if /when requested. The DSK is printed on Chime's housing.

5. If Adding fails, it will slowly flash white light 3 times and then become breathing white light; repeat steps 1 to 4. Contact us for further support if needed.

6. If Adding succeeds, it will quickly flash white light 3 times and then become off. Now, Chime is a part of your Z-Wave home control system. You can configure it and its automations via your Z-Wave system; please refer to your software's user guide for precise instructions.

Note:

If Action Button is clicked again during the Learn Mode, the Learn Mode will exit. At the same time, Indicator Light will extinguish immediately, and then become breathing white light.

3.3 How to remove Chime from Z-Wave network

1. Set your Z-Wave Controller into its 'Remove Device' mode in order to remove Chime from your Z-Wave system. Refer to the Controller's manual if you are unsure of how to perform this step.

2. Power on Chime via the provided power adapter; its LED will be off.

3. Click Chime Action Button 6 times quickly; it will bright white light, up to 2s.

4. If Removing fails, it will keep off; repeat steps 1 to 3. Contact us for further support if needed.

5. If Removing succeeds, it will quickly flash white light 3 times and then become breathing white light. Now, Chime is removed from Z-Wave network successfully.

3.4 How to factory reset Chime

If the primary controller is missing or inoperable, you may need to reset the device to factory settings.

Make sure the Chime is powered. To complete the reset process manually, press and hold the Action Button for at least 20s. The LED indicator will quickly flash white light 3 times and then become breathing white light, which indicates the reset operation is successful. Otherwise, please try again. Contact us for further support if needed.

Note:

1. This procedure should only be used when the primary controller is missing or inoperable.

2. Factory Reset Chime will:

(a) Remove Chime from Z-Wave network;

(b) Delete the Association setting;

(c) Restore the configuration settings to the default. (Except configuration parameter 51/52/53/54)

3.5 How to factory reset Button

There is no way to factory reset Button. If something happens to Button, please try to re-power it. Contact us for further support if needed.

3.6 How to install Chime

Chime and Button communicate wirelessly and can be installed up to 120 meters/393 feet apart. However, the wireless range is reduced by interference from competing wireless signals, doors, and walls. Before installing Chime, test your desired installation location for both Button and Chime first to ensure that a reliable wireless connection can be made between the 2 parts.

1. Select an installation location for Chime. Do not yet install it.

2. Power on Chime via the provided power adapter.

3. Affix Chime in the desired installation location using the provided mounting plate.

a. Affix the mounting plate to the selected surface; affix it using either 3 × 20mm screws or double-sided tape.

b. Lock your Chime onto the mounting plate.

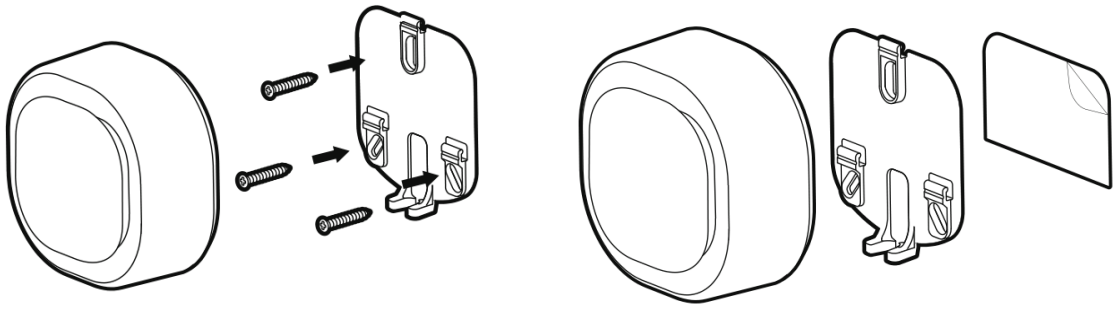

3.7 How to install Button

Avoid exposing Button to direct sunlight where possible to avoid UV damage and reduced battery performance.

1. Select an installation location for Button. Do not yet install it.

2. Power on Button.

a. Remove the 2 screws from Button's rear to open its battery cover and install the provided CR2450 battery with the positive (+) on top.

b. Replace the battery cover and the 2 screws.

3. Test the wireless connection by pressing Ring Button to trigger a doorbell alert. Select an alternative installation location for Chime if the connection is poor.

4. Install Button.

a. Affix the mounting plate to the selected surface; affix it using either 2 × 20mm screws or double-sided tape.

b. Lock your Button onto the mounting plate.

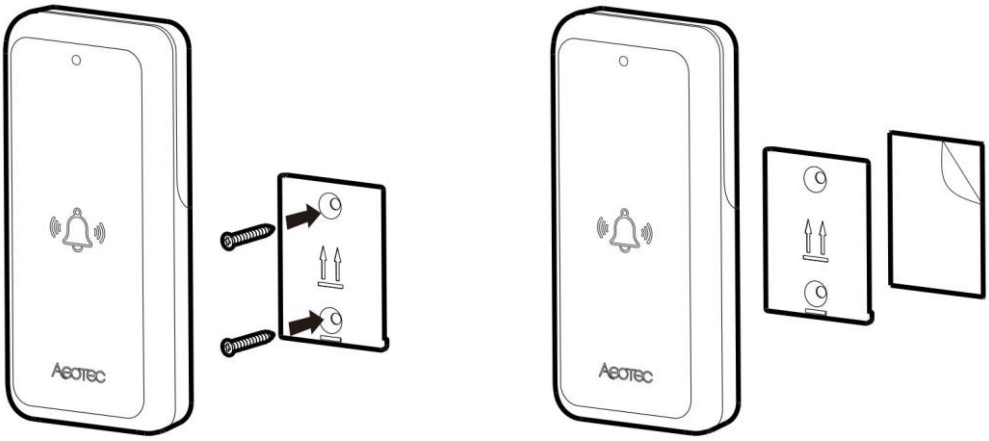

3.8 How to pair Button

There are two way to trigger pairing Button:

- Manually quick click Chime Action Button. Can be done both in and out of the network.
- With Configuration Set. Can only be done in the network. Refer to Configuration Parameter 49/50/51 for details.

Below is mainly about manually quick click Chime Action Button to trigger pairing Button.

1. **Different click times will trigger different Pairing Button Mode. Please action as shown below.**

- Click Action Button **3 times** quickly will trigger **Pairing #1 Button Mode**.
- Click Action Button **4 times** quickly will trigger **Pairing #2 Button Mode**.
- Click Action Button **5 times** quickly will trigger **Pairing #3 Button Mode**.

2. **Observe Chime Indicator Light to make sure which Button is waiting for pairing.**

- When **Pairing #1 Button Mode** is triggered, Chime Indicator Light will bright **1 time** ON 0.5s OFF 1s, and then become constantly bright white light, indicating that Pairing #1 Button Mode has already triggered. Pairing time is up to 10 seconds. In this time period, user MUST manually click Ring Button 3 times quickly. Otherwise it cannot be paired successfully.
- When **Pairing #2 Button Mode** is triggered, Chime Indicator Light will bright **2 times** ON 0.5s OFF 1s, and then become constantly bright white light, indicating that Pairing #2 Button Mode has already triggered. Pairing time is up to 10 seconds. In this time period, user MUST manually click Ring Button 3 times quickly. Otherwise it cannot be paired successfully.

- When **Pairing #3 Button Mode** is triggered, Chime Indicator Light will bright **3 times** ON 0.5s OFF 1s, and then become constantly bright white light, indicating that Pairing #3 Button Mode has already triggered. Pairing time is up to 10 seconds. In this time period, user MUST manually click Ring Button 3 times quickly. Otherwise it cannot be paired successfully.

3. Determine pairing results.

- If pairing Button succeeds, Chime Indicator Light will quickly flash white light 3 times and **play the corresponding tone of paired Button**, and then become breathing white light (when Chime is out of the Z-Wave network) or off (when Chime is in the Z-Wave network)
- If pairing Button fails, Chime Indicator Light will slowly flash white light 3 times and then become breathing white light (when Chime is out of the Z-Wave network) or off (when Chime is in the Z-Wave network).

Note:

- Only one Button can be paired at one time.
- Each successful pairing will overwrite the previous paired Button which has the same Button Number.
- This manually quick click Action Button operation can only be used to trigger pairing, not unpairing.
- If you want to exit Pairing Button Mode, what you need to do is that click the Action Button once.

3.9 How to unpair Button

There is only one way to trigger unpairing Button:

- With Configuration Set. Can only be done in the network. Refer to Configuration Parameter 48 for details.

4 SOFTWARE FUNCTION DEFINITION

4.1 User Behavior Interaction

Note: Indicator Light in the table below refers to Chime Indicator Light, but not Button Indicator Light.

User behavior	Out of the Z-Wave network	In the Z-Wave network
Power OFF	Cut the power.	Cut the power.
Power ON	**Supply the power:** When powered by battery, Indicator Light will be breathing white light for 30s (max). When powered by adapter, Indicator Light will be breathing white light all the time.	**Supply the power:** Indicator Light will become white light for 2s indicating the product has been powered, and then extinguish.
Click Action Button once	**1.Send Node Info for Adding:** When click Action Button once, Indicator Light will quickly flash white light for 30s until Chime is added into the network. It will become constantly bright white light after being assigned a NodeID. If Adding succeeds, it will quickly flash white light 3 times and then off. If Adding fails, it will slowly flash white light 3 times and then become breathing white light. **2.Exit Classic Inclusion Learn Mode:** If Action Button is clicked again during the Learn Mode, the Learn Mode will exit. At the same time, Indicator Light will extinguish immediately, and then become breathing white light. **3.Exit Paring Button Mode:** Indicator Light will slowly flash white light 3 times and then become breathing white light.	**1.Stop playing tone and light:** Tone will immediately stop, and Indicator Light will extinguish immediately. Please note that this function is related to the value of configuration parameter 0x60(96). **2.Exit Paring Button Mode:** Indicator Light will slowly flash white light 3 times and then become off.
Click Action Button 3 times quickly	**Trigger Pairing #1 Button Mode:** Indicator Light will bright 1 time ON 0.5s OFF 1s, and then become constantly bright white light, indicating that Pairing #1 Button Mode has already triggered. If pairing Button succeeds, Indicator Light will quickly flash white light 3 times and then become breathing white light. If pairing Button fails, Indicator Light will slowly flash white light 3 times and then become breathing white light.	**Trigger Pairing #1 Button Mode:** Indicator Light will bright 1 time ON 0.5s OFF 1s, and then become constantly bright white light, indicating that Pairing #1 Button Mode has already triggered. If pairing Button succeeds, Indicator Light will quickly flash white light 3 times and then become off. If pairing Button fails, Indicator Light will slowly flash white light 3 times and then become off.
Click Action Button 4 times quickly	**Trigger Pairing #2 Button Mode:** Indicator Light will bright 2 times ON 0.5s OFF 1s, and then become constantly bright white light, indicating that Pairing #2 Button Mode has already triggered. If pairing Button succeeds, Indicator Light will quickly flash white light 3 times and then become breathing white light. If pairing Button fails, Indicator Light will slowly flash white light 3 times and then become breathing white light.	**Trigger Pairing #2 Button Mode:** Indicator Light will bright 2 times ON 0.5s OFF 1s, and then become constantly bright white light, indicating that Pairing #2 Button Mode has already triggered. If pairing Button succeeds, Indicator Light will quickly flash white light 3 times and then become off. If pairing Button fails, Indicator Light will slowly flash white light 3 times and then become off.

Click Action Button 5 times quickly	**Trigger Pairing #3 Button Mode:** Indicator Light will bright 3 times ON 0.5s OFF 1s, and then become constantly bright white light, indicating that Pairing #3 Button Mode has already triggered. If pairing Button succeeds, Indicator Light will quickly flash white light 3 times and then become breathing white light. If pairing Button fails, Indicator Light will slowly flash white light 3 times and then become breathing white light.	**Trigger Pairing #3 Button Mode:** Indicator Light will bright 3 times ON 0.5s OFF 1s, and then become constantly bright white light, indicating that Pairing #3 Button Mode has already triggered. If pairing Button succeeds, Indicator Light will quickly flash white light 3 times and then become off. If pairing Button fails, Indicator Light will slowly flash white light 3 times and then become off.
Click Action Button 6 times quickly	**Reserved:** Indicator Light is off from press to release.	**Send Node Info for Removing :** Indicator Light will become white light for up to 2s. If Removing succeeds, Indicator Light will quickly flash white light 3 times and then become breathing white light. If Removing fails, Indicator Light will become off, but not breathing white light.
Press and hold Action Button for [1, 2s)	**Reserved:** Indicator Light is off from press to release.	**Reserved:** Indicator Light is off from press to release.
Press and hold Action Button for [2, 5s)	**Test the Tone Effect and Light Effect of the Browse Group:** Indicator Light will become white light when press, and display in the **factory default** Tone Effect and Light Effect of the Browse Group when release.	**Test the Tone Effect and Light Effect of the Browse Group:** Indicator Light will become white light when press, and display in the **user-defined** Tone Effect and Light Effect of the Browse Group when release.
Press and hold Action Button for [5, 10s)	**Reserved:** Indicator Light will become brighter white light when press, and become breathing white light when release.	**Test communication quality:** Indicator Light will become brighter white light when press, and quickly flash white light when release, indicating start to test communication quality between Chime and Node 1. At the end of the test, Indicator Light will become solid white light for 2 seconds. If the communication quality is Good, it will quickly flash white light 3 times and then become off. If the communication quality is Weak, it will slowly flash white light 3 times and then become off.
Press and hold Action Button for [10, 20s)	**Reserved:** Indicator Light will become speedup flashing white light when press, and become breathing white light when release.	**Reserved:** Indicator Light will become speedup flashing white light when press, and become off when release.
Press and hold Action Button for [20, ∞)	**Reserved:** When the time reaches 20s, Indicator Light will become quickly flash white light 3 times and then become breathing white light, no matter it is pressed or released.	**Factory Reset:** When the time reaches 20s, Factory Reset is performed no matter Action Button is pressed or released. Chime will send out Device Reset Locally Notification Report via Lifeline, and it will perform factory reset no matter the Nodes in the Lifeline Group receive the Device Reset Locally Notification from Chime or not. Indicator Light will become quickly flash white light 3 times and then become breathing white light, which indicates the

		reset operation is successful. Otherwise, please try again.

4.2 Supplementary Explanation about Button

Function	Description
Wireless Control Chime	When click Ring Button once, Button can wireless control the corresponding paired Chime.
Pairing Chime	When click Ring Button 3 times quickly, Button can be paired to Chime while Chime triggers Pairing Button Mode.
Sending Button Info to Chime	When re-power or click Ring Button, Button will send its Button ID, Battery Voltage and Button Software Version to its corresponding paired Chime.
Automatic sleep	After sending Button Info to Chime, Button will sleep automatically for saving battery life.
Low Battery Light Effect	If #1 Button is low battery, Chime Indicator Light will repeat cycle (ON 100ms, OFF 5s) If #2 Button is low battery, Chime Indicator Light will repeat cycle (ON 100ms, OFF 100ms, ON 100ms, OFF 5s) If #3 Button is low battery, Chime Indicator Light will repeat cycle (ON 100ms, OFF 100ms, ON 100ms, OFF 100m,s ON 100ms, OFF 5s) When the battery voltage of Button is lower than 2.8V, it is judged to be low battery. When the battery voltage of Button restores to over 2.9V, it is judged to return to normal. Low Battery Light Effect will be activated when Chime detects the corresponding paired Button is low battery, and disappears after the battery returns to normal. Low Battery Light Effect has the lowest priority among all light effects, that is, it will be displayed when there is no other light effect. The Light Effect of the 3 Buttons are different. When multiple Buttons is low battery at the same time, the corresponding light effect of the Button with smaller Button number is displayed first.

4.3 Announced Command Classes in NIF

Note: When DUT is included on S0 level, MANUFACTURER_SPECIFIC CC is supported non-securely; while included on S2 level, MANUFACTURER_SPECIFIC CC is supported securely only.

Command Class	Version	Not added	Non-secure added	Securely 0 added		Securely 2 added	
				Non-secure	Secure	Non-secure	Secure
ZWAVEPLUS_INFO	2	Support	Support	Support		Support	
VERSION	2	Support	Support		Support		Support
CONFIGURATION	1	Support	Support		Support		Support
MANUFACTURER_SPECIFIC	2	Support	Support	Support			Support
ASSOCIATION_GRP_INFO	1	Support	Support		Support		Support
ASSOCIATION	2	Support	Support		Support		Support
POWERLEVEL	1	Support	Support		Support		Support
MULTI_CHANNEL_ASSOCIATION	3	Support	Support		Support		Support
MULTI_CHANNEL	4	Support	Support		Support		Support
DEVICE_RESET_LOCALLY	1	Support	Support		Support		Support
TRANSPORT_SERVICE	2	Support	Support	Support		Support	
SECURITY	1	Support	Support	Support		Support	
SECURITY_2	1	Support	Support	Support		Support	
SUPERVISION	1	Support	Support	Support		Support	
FIRMWARE_UPDATE_MD	4	Support	Support		Support		Support

NOTIFICATION	8	Support	Support		Support		Support
SOUND_SWITCH	1	Support	Support		Support		Support

4.4 Basic Command Class mapping

Basic Set Command (Value) maps to Sound Switch Tone Play Set Command (Tone Identifier).

Basic Get Command maps to Sound Switch Tone Play Get Command.

Basic Report Command (Value) maps to Sound Switch Tone Play Report Command (Tone Identifier).

4.5 Z-Wave Plus Info

Parameter	Value
Z-Wave Plus Version	1
Role Type	5 (ZWAVEPLUS_INFO_REPORT_ROLE_TYPE_SLAVE_ALWAYS_ON)
Node Type	0 (ZWAVEPLUS_INFO_REPORT_NODE_TYPE_ZWAVEPLUS_NODE)
Installer Icon Type	0x2200 (ICON_TYPE_GENERIC_SOUND_SWITCH)
User Icon Type	0x2200 (ICON_TYPE_GENERIC_SOUND_SWITCH)

4.6 Manufacturer Specific

Parameter	Value
Manufacturer ID 1	0x03
Manufacturer ID 2	0x71
Product Type ID 1	0x00(EU), 0x01(US), 0x02(AU)
Product Type ID 2	0x03
Product ID 1	0x00
Product ID 2	0xA2

4.7 Version

Parameter	Value
Z-Wave Protocol Library Type	0x03
Z-Wave Protocol Version	0x05
Z-Wave Protocol Sub Version	0x03
Firmware 0 Version	ZM5101 Software Version MSB
Firmware 0 Sub Version	ZM5101 Software Version LSB
Hardware Version	0xA2
Number of firmware targets	0x00

4.8 Notification

Notification Type		Notification Events		Description
Home Security	0x07	State idle	0x00	N/A
		Tampering, product moved	0x09	Chime is tampered and moved.
Power Management	0x08	State idle	0x00	Button’s battery comes back to normal.
		Replace battery soon	0x0A	Button’s battery is in low battery.
Siren	0x0E	State idle	0x00	Chime alarm is inactive.
		Siren active	0x01	Chime alarm is triggered.

4.9 Multi Channel

4.9.1 Endpoint Capability

Parameter	Value
Individual End Points	8
Aggregated End Points	0
Dynamic	0
Identical	1
Generic Device Class	GENERIC_TYPE_AV_CONTROL_POINT
Specific Device Class	SPECIFIC_TYPE_SOUND_SWITCH
Command Classes	COMMAND_CLASS_ZWAVEPLUS_INFO COMMAND_CLASS_SECURITY COMMAND_CLASS_SECURITY_2 COMMAND_CLASS_SUPERVISION COMMAND_CLASS_ASSOCIATION COMMAND_CLASS_ASSOCIATION_GRP_INFO COMMAND_CLASS_MULTI_CHANNEL_ASSOCIATION COMMAND_CLASS_NOTIFICATION COMMAND_CLASS_SOUND_SWITCH

Note:

In order to implement multiple different applications, especially the function that customize different Light Effect and Tone Effect for different Endpoints with Configuration CC and Sound Switch CC, and the function that distinguish which paired Button is clicked, although this product has only one speaker and one Indicator Light, we still design it as Multi Channel Device. For easy understanding, we suggest you consider these Endpoints as Virtual Application Resources. In addition, you may get an overview of Endpoint’s application function through the Group Name in the AGI. Designed as Multi Channel Device will greatly enrich the product's functions and meet more application scenarios.

4.9.2 Endpoint Priority Definition

Endpoint	Application Function	Priority
1	Browse	1 (Highest)
2	Tampering	4 (Lowest)
3	Doorbell 1	3
4	Doorbell 2	3
5	Doorbell 3	3
6	Environment	2
7	Security	2
8	Emergency	2

Rule Description	Example
An Endpoint is playing tone; at the same time, if another same-priority or high-priority Endpoint is also triggered, then the playing tone will be replaced by the new Endpoint configuration, and the original Endpoint will stop playing.	The Endpoint 2(Doorbell 1) is playing tone; at the same time, if Endpoint 4(Doorbell 2) or Endpoint 6(Environment) is also triggered, then the playing tone will be replaced by Endpoint 4 or Endpoint 6, and Endpoint 2 will stop playing.
An Endpoint is playing tone; at the same time, if another low-priority Endpoint is also triggered, then the playing tone will NOT be replaced by the new Endpoint, and the original Endpoint will keep playing.	The Endpoint 1(Browse) is playing tone; at the same time, if Endpoint 2(Tampering) or Endpoint 3(Doorbell 1) is also triggered, then the playing tone will NOT be replaced by Endpoint 2 or Endpoint 3, and Endpoint 1 will keep playing.

4.9.3 Endpoint responses to receiving Notification Report

Some nodes may only support Lifeline association group, without any other control association groups. And some nodes may not support Multi Channel communication. Considering compatibility, we implement the application function that Endpoint responses to receiving Notification Report. Below is more details.

When Endpoint receives Notification Report issued from other notification nodes, Endpoint will be triggered to play tone and light, as long as the Notification Report is listed in the following table. For example, when Endpoint 6 (Environment) receives Notification Report (Smoke detected) or Notification Report (Water Leak detected) issued from other notification nodes, it will trigger Endpoint 6 to play tone and light corresponding to Endpoint 6's configuration.

Besides, when Root Device receives Notification Report issued from other notification nodes, Root Device will transfer the Notification Report to Endpoint 6, 7 or 8 to trigger playing tone and light, as long as the Notification Report is listed in the following table. For example, when Root Device receives Notification Report (Intrusion), it will trigger Endpoint 7 (Security) to play tone and light corresponding to Endpoint 7's configuration. In other words, this product is also compatible with nodes that do not support Multi Channel communication.

In short, notification nodes in the Z-Wave network can operated with this product to make a notable siren alarm for some environment, security or emergency events.

The table below defines which Notification Report can trigger Endpoint to play tone and light.

Endpoint	Application	Notification Type	Value	Notification Event	Value
1	Browse	N/A	N/A	N/A	N/A
2	Tampering	N/A	N/A	N/A	N/A
3	Doorbell 1	N/A	N/A	N/A	N/A
4	Doorbell 2	N/A	N/A	N/A	N/A
5	Doorbell 3	N/A	N/A	N/A	N/A
6	Environment	Smoke Alarm	0x01	Smoke detected (location provided)	0x01
				Smoke detected	0x02
		CO Alarm	0x02	Carbon monoxide detected (location provided)	0x01
				Carbon monoxide detected	0x02
		CO2 Alarm	0x03	Carbon dioxide detected (location provided)	0x01
				Carbon dioxide detected	0x02
		Heat Alarm	0x04	Overheat detected (location provided)	0x01
				Overheat detected	0x02
				Under heat detected (location provided)	0x05
				Under heat detected	0x06
		Water Alarm	0x05	Water leak detected (location provided)	0x01
				Water leak detected	0x02
		Gas Alarm	0x12	Combustible gas detected (location provided)	0x01
				Combustible gas detected	0x02
				Toxic gas detected (location provided)	0x03
				Toxic gas detected	0x04
7	Security	Access Control	0x06	Window/door is open	0x16
		Home Security	0x07	Intrusion (location provided)	0x01
				Intrusion	0x02
				Tampering, product cover removed	0x03
				Tampering, invalid code	0x04
				Glass breakage (location provided)	0x05
				Glass breakage	0x06
				Motion detection (location provided)	0x07
				Motion detection	0x08
				Tampering, product moved	0x09
8	Emergency	Emergency Alarm	0x0A	Contact police	0x01
				Contact fire service	0x02
				Contact medical service	0x03

4.10 Association Group Info

Root device

ID	Name	Node count	Profile	Function
1	Lifeline	5	General: Lifeline	**Device Reset Locally Notification:** Issued when Factory Reset is performed. **Sound Switch Tone Play Report:** Issued when a tone has started playing. **Sound Switch Configuration Report:** Issued when volume or default tone has changed. **Notification Report (Type=0x0E; Event=0x01):** Issued when Chime starts playing tone. **Notification Report (Type=0x0E; Event=0x00):** Issued when Chime stops playing tone. **Notification Report (Type=0x07; Event=0x09):** Issued when Chime is tampered and moved. **Notification Report (Type=0x08; Event=0x0A):** Issued when Button is low battery. **Notification Report (Type=0x08; Event=0x00):** Issued when Button comes back to normal battery. **Configuration Report (Parameter=0x32):** Issued when Pairing Button Mode is triggered. **Configuration Report (Parameter=0x33):** Issued when Unpairing or Pairing Button Mode finishes.
2	On/Off control (Browse)	5	Control: Key01	Mirror of endpoint 1, group 2
3	On/Off control (Tampering)	5	Control: Key02	Mirror of endpoint 2, group 2
4	On/Off control (Doorbell 1)	5	Control: Key03	Mirror of endpoint 3, group 2
5	On/Off control (Doorbell 2)	5	Control: Key04	Mirror of endpoint 4, group 2
6	On/Off control (Doorbell 3)	5	Control: Key05	Mirror of endpoint 5, group 2
7	On/Off control (Environment)	5	Control: Key06	Mirror of endpoint 6, group 2
8	On/Off control (Security)	5	Control: Key07	Mirror of endpoint 7, group 2
9	On/Off control (Emergency)	5	Control: Key08	Mirror of endpoint 8, group 2

Endpoint 1

ID	Name	Node count	Profile	Function
1	Lifeline	0	General: Lifeline	**Sound Switch Tone Play Report:** Issued when a tone has started playing. **Sound Switch Configuration Report:** Issued when volume or default tone has changed. **Notification Report (Type=0x0E; Event=0x01):** Issued when Endpoint 1 starts playing tone. **Notification Report (Type=0x0E; Event=0x00):** Issued when Endpoint 1 stops playing tone.
2	On/Off control (Browse)	5	Control: Key01	When Endpoint 1 starts playing tone or stops playing tone, Nodes associated are controlled and will receive a Basic Set CC.

Endpoint 2

ID	Name	Node count	Profile	Function
1	Lifeline	0	General: Lifeline	**Sound Switch Tone Play Report:** Issued when a tone has started playing.

				Sound Switch Configuration Report: Issued when volume or default tone has changed. **Notification Report (Type=0x0E; Event=0x01):** Issued when Endpoint 2 starts playing tone. **Notification Report (Type=0x0E; Event=0x00):** Issued when Endpoint 2 stops playing tone.
2	On/Off control (Tampering)	5	Control: Key02	When Endpoint 2 starts playing tone or stops playing tone, Nodes associated are controlled and will receive a Basic Set CC.

Endpoint 3

ID	Name	Node count	Profile	Function
1	Lifeline	0	General: Lifeline	**Sound Switch Tone Play Report:** Issued when a tone has started playing. **Sound Switch Configuration Report:** Issued when volume or default tone has changed. **Notification Report (Type=0x0E; Event=0x01):** Issued when Endpoint 3 starts playing tone. **Notification Report (Type=0x0E; Event=0x00):** Issued when Endpoint 3 stops playing tone. **Notification Report (Type=0x08; Event=0x0A):** Issued when #1 Button is low battery. **Notification Report (Type=0x08; Event=0x00):** Issued when #1 Button comes back to normal battery.
2	On/Off control (Doorbell 1)	5	Control: Key03	When Endpoint 3 starts playing tone or stops playing tone, Nodes associated are controlled and will receive a Basic Set CC.

Endpoint 4

ID	Name	Node count	Profile	Function
1	Lifeline	0	General: Lifeline	**Sound Switch Tone Play Report:** Issued when a tone has started playing. **Sound Switch Configuration Report:** Issued when volume or default tone has changed. **Notification Report (Type=0x0E; Event=0x01):** Issued when Endpoint 4 starts playing tone. **Notification Report (Type=0x0E; Event=0x00):** Issued when Endpoint 4 stops playing tone. **Notification Report (Type=0x08; Event=0x0A):** Issued when #2 Button is low battery. **Notification Report (Type=0x08; Event=0x00):** Issued when #2 Button comes back to normal battery.
2	On/Off control (Doorbell 2)	5	Control: Key04	When Endpoint 4 starts playing tone or stops playing tone, Nodes associated are controlled and will receive a Basic Set CC.

Endpoint 5

ID	Name	Node count	Profile	Function
1	Lifeline	0	General: Lifeline	**Sound Switch Tone Play Report:** Issued when a tone has started playing. **Sound Switch Configuration Report:** Issued when volume or default tone has changed. **Notification Report (Type=0x0E; Event=0x01):** Issued when Endpoint 5 starts playing tone. **Notification Report (Type=0x0E; Event=0x00):** Issued when Endpoint 5 stops playing tone. **Notification Report (Type=0x08; Event=0x0A):** Issued when #3 Button is low battery. **Notification Report (Type=0x08; Event=0x00):** Issued when #3 Button comes back to normal battery.

2	On/Off control (Doorbell 3)	5	Control: Key05	When Endpoint 5 starts playing tone or stops playing tone, Nodes associated are controlled and will receive a Basic Set CC.

Endpoint 6

ID	Name	Node count	Profile	Function
1	Lifeline	0	General: Lifeline	**Sound Switch Tone Play Report:** Issued when a tone has started playing. **Sound Switch Configuration Report:** Issued when volume or default tone has changed. **Notification Report (Type=0x0E; Event=0x01):** Issued when Endpoint 6 starts playing tone. **Notification Report (Type=0x0E; Event=0x00):** Issued when Endpoint 6 stops playing tone.
2	On/Off control (Environment)	5	Control: Key06	When Endpoint 6 starts playing tone or stops playing tone, Nodes associated are controlled and will receive a Basic Set CC.

Endpoint 7

ID	Name	Node count	Profile	Function
1	Lifeline	0	General: Lifeline	**Sound Switch Tone Play Report:** Issued when a tone has started playing. **Sound Switch Configuration Report:** Issued when volume or default tone has changed. **Notification Report (Type=0x0E; Event=0x01):** Issued when Endpoint 7 starts playing tone. **Notification Report (Type=0x0E; Event=0x00):** Issued when Endpoint 7 stops playing tone.
2	On/Off control (Security)	5	Control: Key07	When Endpoint 7 starts playing tone or stops playing tone, Nodes associated are controlled and will receive a Basic Set CC.

Endpoint 8

ID	Name	Node count	Profile	Function
1	Lifeline	0	General: Lifeline	**Sound Switch Tone Play Report:** Issued when a tone has started playing. **Sound Switch Configuration Report:** Issued when volume or default tone has changed. **Notification Report (Type=0x0E; Event=0x01):** Issued when Endpoint 8 starts playing tone. **Notification Report (Type=0x0E; Event=0x00):** Issued when Endpoint 8 stops playing tone.
2	On/Off control (Emergency)	5	Control: Key08	When Endpoint 8 starts playing tone or stops playing tone, Nodes associated are controlled and will receive a Basic Set CC.

4.11 Configuration

Note: R=Read Only, W=Write Only, WR=Write and Read.

<table>
<tr><th>Parameter</th><th>Description</th><th>W/R</th><th>Default</th><th>Size</th></tr>
<tr><td>0x01(1)</td><td>Configure the Light Effect and Tone Play Mode for Endpoint 1(Browse).
<table>
<tr><th>7</th><th>6</th><th>5</th><th>4</th><th>3</th><th>2</th><th>1</th><th>0</th></tr>
<tr><td colspan="8">Light Effect Index</td></tr>
<tr><td colspan="8">Tone Play Mode</td></tr>
<tr><td colspan="8">Reserved</td></tr>
<tr><td colspan="8">Reserved</td></tr>
</table></td><td>WR</td><td>0x01000000</td><td>4</td></tr>
</table>

Light Effect Index

Value	Description
1	#1 Light Effect, mapping to Parameter 16.
2	#2 Light Effect, mapping to Parameter 17.
4	#3 Light Effect, mapping to Parameter 18.
8	#4 Light Effect, mapping to Parameter 19.
16	#5 Light Effect, mapping to Parameter 20.
32	#6 Light Effect, mapping to Parameter 21.
64	#7 Light Effect, mapping to Parameter 22.
127	Use the last valid configuration value.

Tone Play Mode

Value	Description
0	Single playback.
1	Single loop playback.
2	**List loop playback for auto-selecting tone:** If you're not sure which tone to use, you can configure the value of Tone Play Mode to be 2. Then send Basic Set 0xFF to Endpoint 1 or Root Device to trigger auto-selecting tone function. Chime will play built-in tones **in order** and the Default Tone Identifier will be changed each time a new tone is played. When send Basic Set 0x00 to Endpoint 1 or Root Device to stop playing tone, the Default Tone Identifier will store, which means the tone has been selected. Please note that the Tone Play Mode needs to be configured to be 0 or 1 after the tone is selected, otherwise the automatic selection tone function will be retriggered when the Endpoint 1 or Root Device is triggered to play tone and light again.
3	**List random playback for auto-selecting tone:** If you're not sure which tone to use, you can configure the value of Tone Play Mode to be 3. Then send Basic Set 0xFF to Endpoint 1 or Root Device to trigger auto-selecting tone function. Chime will play built-in tones **randomly** and the Default Tone Identifier will be changed each time a new tone is played. When send Basic Set 0x00 to Endpoint 1 or Root Device to stop playing tone, the Default Tone Identifier will store, which means the tone has been selected. Please note that the Tone Play Mode needs to be configured to be 0 or 1 after the tone is selected, otherwise the automatic selection tone function will be retriggered when the Endpoint 1 or Root Device is triggered to play tone and light again.
255	Use the last valid configuration value.

Example:
If you want to use #5 Light Effect and Single loop playback, please configure the value of Light Effect Index field to be 16 and Tone Play Mode field to be 1, that is, the value of the parameter is equal to 0x10010000.

Then, if you send Basic Set or Sound Switch Tone Play Set to Endpoint 1 or Root Device, it will trigger Endpoint 1, actually Chime, to single loop play the tone based on the value of the sending Basic Set or Sound Switch Tone Play Set. At the same time, Chime Indicator Light will display #5 Light Effect based on the configuration of Parameter 20.

In such case, the tone and light will not stop until Endpoint 1 or Root Device receives Basic Set (Value=0) or Sound Switch Tone Play Set (Tone Identifier=0).

Here is another example about "Use the last valid configuration value":
Assume that current value equals to 0x02000000, if you set the value to be 0x7F010000, then **Value1 (Light Effect Index)** will use the last valid configuration value and **Value2 (Tone Play Mode)** will be update to be 1, that is, the final value equals to 0x02010000.

0x02(2)	**Configure the Light Effect and Tone Effect for Endpoint 2(Tampering).**	WR	0x01000001	4

7	6	5	4	3	2	1	0
Light Effect Index							
Intercepting duration of a tone							
Interval between 2 tones							
Tone Play Count							

Light Effect Index

Value	Description
1	#1 Light Effect, mapping to Parameter 16.
2	#2 Light Effect, mapping to Parameter 17.
4	#3 Light Effect, mapping to Parameter 18.
8	#4 Light Effect, mapping to Parameter 19.
16	#5 Light Effect, mapping to Parameter 20.
32	#6 Light Effect, mapping to Parameter 21.
64	#7 Light Effect, mapping to Parameter 22.
127	Use the last valid configuration value.

Intercepting duration of a tone

Value	Description
0	Keep the original duration of a tone itself, without any interception.
1..254	1-254 seconds. Intercept the duration of a tone. If the intercepting duration is shorter than the original duration of a tone, actual single play time is equal to the intercepting duration. If the intercepting duration is longer than the original duration of a tone, actual single play time is equal to the original duration.
255	Use the last valid configuration value.

Interval between 2 tones

Value	Description
0	No interval.
1..254	1-254 seconds. Specify the interval time between 2 tones.
255	Use the last valid configuration value.

Tone Play Count

Value	Description
0	Unlimited playback until stop by user.
1..254	1-254 times. Specify the count that the tone will be repeated to be played.
255	Use the last valid configuration value.

Example:
If you want to use #1 Light Effect, 2s intercepting duration, 3s interval, and 4 times play count, please configure the value of the parameter to be 0x01020304.

Then, if you send Basic Set or Sound Switch Tone Play Set to Endpoint 2, it will trigger Endpoint 2, actually Chime, to play tone. The tone identifier is based on the value of the sending Basic Set or Sound Switch Tone Play Set. And the duration of the tone is intercepted to be 2s. Chime will continuously play the intercepted tone up to 4 times, with 3s interval between 2 tones. At the same time, Chime will display #1 Light Effect based on the configuration of Parameter 16.

Tone and light will stop when the tone play count reaches 4 or Endpoint 2 receives Basic Set (Value=0) or Sound Switch Tone Play Set (Tone Identifier=0).

Here is another example about "Use the last valid configuration value":
Assume that current value equals to 0x01020304, if you set the value to be 0x02FF00FF, then both **Value2 (Intercepting duration of a tone)** and **Value4 (Tone Play Count)** will use the last valid configuration value, but **Value1 (Light Effect Index)** will be update to be 2 and **Value3 (Interval between 2 tones)** to be 0, that is, the final value equals to 0x02020004.

<table>
<tr><td></td><td>Note:
Using Intercepting duration of a tone, Interval between 2 tones and Tone Play Count, you can edit the playback of the built-in tones according to your own ideas, making the tones more diverse and personalized.

This Parameter will also work when Chime is moved, which indicates that perhaps someone is tampering and moving the product. However, please note that the tone and light will stop once the tampering and moving stops.</td><td></td><td></td><td></td></tr>
<tr><td>0x03(3)</td><td>Configure the Light Effect and Tone Effect for Endpoint 3(Doorbell 1).
<table>
<tr><th>7</th><th>6</th><th>5</th><th>4</th><th>3</th><th>2</th><th>1</th><th>0</th></tr>
<tr><td colspan="8">Light Effect Index</td></tr>
<tr><td colspan="8">Intercepting duration of a tone</td></tr>
<tr><td colspan="8">Interval between 2 tones</td></tr>
<tr><td colspan="8">Tone Play Count</td></tr>
</table>
Light Effect Index
<table>
<tr><th>Value</th><th>Description</th></tr>
<tr><td>1</td><td>#1 Light Effect, mapping to Parameter 16.</td></tr>
<tr><td>2</td><td>#2 Light Effect, mapping to Parameter 17.</td></tr>
<tr><td>4</td><td>#3 Light Effect, mapping to Parameter 18.</td></tr>
<tr><td>8</td><td>#4 Light Effect, mapping to Parameter 19.</td></tr>
<tr><td>16</td><td>#5 Light Effect, mapping to Parameter 20.</td></tr>
<tr><td>32</td><td>#6 Light Effect, mapping to Parameter 21.</td></tr>
<tr><td>64</td><td>#7 Light Effect, mapping to Parameter 22.</td></tr>
<tr><td>127</td><td>Use the last valid configuration value.</td></tr>
</table>
Intercepting duration of a tone
<table>
<tr><th>Value</th><th>Description</th></tr>
<tr><td>0</td><td>Keep the original duration of a tone itself, without any interception.</td></tr>
<tr><td>1..254</td><td>1-254 seconds. Intercept the duration of a tone.
If the intercepting duration is shorter than the original duration of a tone, actual single play time is equal to the intercepting duration.

If the intercepting duration is longer than the original duration of a tone, actual single play time is equal to the original duration.</td></tr>
<tr><td>255</td><td>Use the last valid configuration value.</td></tr>
</table>
Interval between 2 tones
<table>
<tr><th>Value</th><th>Description</th></tr>
<tr><td>0</td><td>No interval.</td></tr>
<tr><td>1..254</td><td>1-254 seconds. Specify the interval time between 2 tones.</td></tr>
<tr><td>255</td><td>Use the last valid configuration value.</td></tr>
</table>
Tone Play Count
<table>
<tr><th>Value</th><th>Description</th></tr>
<tr><td>0</td><td>Unlimited playback until stop by user.</td></tr>
<tr><td>1..254</td><td>1-254 times. Specify the count that the tone will be repeated to be played.</td></tr>
<tr><td>255</td><td>Use the last valid configuration value.</td></tr>
</table>
Please refer to parameter 0x02(2) for more examples.

Note:
Using Intercepting duration of a tone, Interval between 2 tones and Tone Play Count, you can edit the playback of the built-in tones according to your own ideas, making the tones more diverse and personalized.

This Parameter will also work when Chime is triggered by the paired #1 Button to play tone, which indicates that perhaps someone is outside the door.</td><td>WR</td><td>0x02000001</td><td>4</td></tr>
<tr><td>0x04(4)</td><td>Configure the Light Effect and Tone Effect for Endpoint 4(Doorbell 2).
<table>
<tr><th>7</th><th>6</th><th>5</th><th>4</th><th>3</th><th>2</th><th>1</th><th>0</th></tr>
</table></td><td>WR</td><td>0x02000001</td><td>4</td></tr>
</table>

Light Effect Index	
Intercepting duration of a tone	
Interval between 2 tones	
Tone Play Count	

Light Effect Index

Value	Description
1	#1 Light Effect, mapping to Parameter 16.
2	#2 Light Effect, mapping to Parameter 17.
4	#3 Light Effect, mapping to Parameter 18.
8	#4 Light Effect, mapping to Parameter 19.
16	#5 Light Effect, mapping to Parameter 20.
32	#6 Light Effect, mapping to Parameter 21.
64	#7 Light Effect, mapping to Parameter 22.
127	Use the last valid configuration value.

Intercepting duration of a tone

Value	Description
0	Keep the original duration of a tone itself, without any interception.
1..254	1-254 seconds. Intercept the duration of a tone. If the intercepting duration is shorter than the original duration of a tone, actual single play time is equal to the intercepting duration. If the intercepting duration is longer than the original duration of a tone, actual single play time is equal to the original duration.
255	Use the last valid configuration value.

Interval between 2 tones

Value	Description
0	No interval.
1..254	1-254 seconds. Specify the interval time between 2 tones.
255	Use the last valid configuration value.

Tone Play Count

Value	Description
0	Unlimited playback until stop by user.
1..254	1-254 times. Specify the count that the tone will be repeated to be played.
255	Use the last valid configuration value.

Please refer to parameter 0x02(2) for more examples.

Note:
Using Intercepting duration of a tone, Interval between 2 tones and Tone Play Count, you can edit the playback of the built-in tones according to your own ideas, making the tones more diverse and personalized.

This Parameter will also work when Chime is triggered by the paired #2 Button to play tone, which indicates that perhaps someone is outside the door.

0x05(5) — WR — 0x02000001 — 4

Configure the Light Effect and Tone Effect for Endpoint 5(Doorbell 3).

7	6	5	4	3	2	1	0
Light Effect Index							
Intercepting duration of a tone							
Interval between 2 tones							
Tone Play Count							

Light Effect Index

Value	Description
1	#1 Light Effect, mapping to Parameter 16.
2	#2 Light Effect, mapping to Parameter 17.
4	#3 Light Effect, mapping to Parameter 18.

	8 | #4 Light Effect, mapping to Parameter 19. 16 | #5 Light Effect, mapping to Parameter 20. 32 | #6 Light Effect, mapping to Parameter 21. 64 | #7 Light Effect, mapping to Parameter 22. 127 | Use the last valid configuration value. **Intercepting duration of a tone** Value | Description 0 | Keep the original duration of a tone itself, without any interception. 1..254 | 1-254 seconds. Intercept the duration of a tone. If the intercepting duration is shorter than the original duration of a tone, actual single play time is equal to the intercepting duration. If the intercepting duration is longer than the original duration of a tone, actual single play time is equal to the original duration. 255 | Use the last valid configuration value. **Interval between 2 tones** Value | Description 0 | No interval. 1..254 | 1-254 seconds. Specify the interval time between 2 tones. 255 | Use the last valid configuration value. **Tone Play Count** Value | Description 0 | Unlimited playback until stop by user. 1..254 | 1-254 times. Specify the count that the tone will be repeated to be played. 255 | Use the last valid configuration value. **Please refer to parameter 0x02(2) for more examples.** **Note:** Using Intercepting duration of a tone, Interval between 2 tones and Tone Play Count, you can edit the playback of the built-in tones according to your own ideas, making the tones more diverse and personalized. This Parameter will also work when Chime is triggered by the paired #1 Button to play tone, which indicates that perhaps someone is outside the door.			
0x06(6)	**Configure the Light Effect and Tone Effect for Endpoint 6(Environment).** 7 | 6 | 5 | 4 | 3 | 2 | 1 | 0 Light Effect Index Intercepting duration of a tone Interval between 2 tones Tone Play Count **Light Effect Index** Value | Description 1 | #1 Light Effect, mapping to Parameter 16. 2 | #2 Light Effect, mapping to Parameter 17. 4 | #3 Light Effect, mapping to Parameter 18. 8 | #4 Light Effect, mapping to Parameter 19. 16 | #5 Light Effect, mapping to Parameter 20. 32 | #6 Light Effect, mapping to Parameter 21. 64 | #7 Light Effect, mapping to Parameter 22. 127 | Use the last valid configuration value. **Intercepting duration of a tone** Value | Description 0 | Keep the original duration of a tone itself, without any interception. 1..254 | 1-254 seconds. Intercept the duration of a tone.	WR	0x04000000	4

	If the intercepting duration is shorter than the original duration of a tone, actual single play time is equal to the intercepting duration. If the intercepting duration is longer than the original duration of a tone, actual single play time is equal to the original duration.
255	Use the last valid configuration value.

Interval between 2 tones

Value	Description
0	No interval.
1..254	1-254 seconds. Specify the interval time between 2 tones.
255	Use the last valid configuration value.

Tone Play Count

Value	Description
0	Unlimited playback until stop by user.
1..254	1-254 times. Specify the count that the tone will be repeated to be played.
255	Use the last valid configuration value.

Please refer to parameter 0x02(2) for more examples.

Note:
Using Intercepting duration of a tone, Interval between 2 tones and Tone Play Count, you can edit the playback of the built-in tones according to your own ideas, making the tones more diverse and personalized.

This Parameter will also work when Chime is triggered by the Notification Report from other nodes to play tone, which indicates that perhaps some environmental anomaly occur.

0x07(7) — WR — 0x04000000 — 4

Configure the Light Effect and Tone Effect for Endpoint 7(Security).

7	6	5	4	3	2	1	0
Light Effect Index							
Intercepting duration of a tone							
Interval between 2 tones							
Tone Play Count							

Light Effect Index

Value	Description
1	#1 Light Effect, mapping to Parameter 16.
2	#2 Light Effect, mapping to Parameter 17.
4	#3 Light Effect, mapping to Parameter 18.
8	#4 Light Effect, mapping to Parameter 19.
16	#5 Light Effect, mapping to Parameter 20.
32	#6 Light Effect, mapping to Parameter 21.
64	#7 Light Effect, mapping to Parameter 22.
127	Use the last valid configuration value.

Intercepting duration of a tone

Value	Description
0	Keep the original duration of a tone itself, without any interception.
1..254	1-254 seconds. Intercept the duration of a tone. If the intercepting duration is shorter than the original duration of a tone, actual single play time is equal to the intercepting duration. If the intercepting duration is longer than the original duration of a tone, actual single play time is equal to the original duration.
255	Use the last valid configuration value.

Interval between 2 tones

Value	Description
0	No interval.

	1..254 | 1-254 seconds. Specify the interval time between 2 tones. 255 | Use the last valid configuration value. **Tone Play Count** Value | Description 0 | Unlimited playback until stop by user. 1..254 | 1-254 times. Specify the count that the tone will be repeated to be played. 255 | Use the last valid configuration value. **Please refer to parameter 0x02(2) for more examples.** **Note:** Using Intercepting duration of a tone, Interval between 2 tones and Tone Play Count, you can edit the playback of the built-in tones according to your own ideas, making the tones more diverse and personalized. This Parameter will also work when Chime is triggered by the Notification Report from other nodes to play tone, which indicates that perhaps some security event occur.			
0x08(8)	**Configure the Light Effect and Tone Effect for Endpoint 8(Emergency).** 7 | 6 | 5 | 4 | 3 | 2 | 1 | 0 Light Effect Index Intercepting duration of a tone Interval between 2 tones Tone Play Count **Light Effect Index** Value | Description 1 | #1 Light Effect, mapping to Parameter 16. 2 | #2 Light Effect, mapping to Parameter 17. 4 | #3 Light Effect, mapping to Parameter 18. 8 | #4 Light Effect, mapping to Parameter 19. 16 | #5 Light Effect, mapping to Parameter 20. 32 | #6 Light Effect, mapping to Parameter 21. 64 | #7 Light Effect, mapping to Parameter 22. 127 | Use the last valid configuration value. **Intercepting duration of a tone** Value | Description 0 | Keep the original duration of a tone itself, without any interception. 1..254 | 1-254 seconds. Intercept the duration of a tone. If the intercepting duration is shorter than the original duration of a tone, actual single play time is equal to the intercepting duration. If the intercepting duration is longer than the original duration of a tone, actual single play time is equal to the original duration. 255 | Use the last valid configuration value. **Interval between 2 tones** Value | Description 0 | No interval. 1..254 | 1-254 seconds. Specify the interval time between 2 tones. 255 | Use the last valid configuration value. **Tone Play Count** Value | Description 0 | Unlimited playback until stop by user. 1..254 | 1-254 times. Specify the count that the tone will be repeated to be played. 255 | Use the last valid configuration value.	WR	0x04000000	4

Please refer to parameter 0x02(2) for more examples.

Note:
Using Intercepting duration of a tone, Interval between 2 tones and Tone Play Count, you can edit the playback of the built-in tones according to your own ideas, making the tones more diverse and personalized.

This Parameter will also work when Chime is triggered by the Notification Report from other nodes to play tone, which indicates that perhaps some emergency event occur.

0x10(16) | WR | 0x4B191403 | 4

Configure #1 Light Effect.

7	6	5	4	3	2	1	0
Gradually bright duration							
Gradually extinguished duration							
Keep bright duration							
Keep extinguished duration							

Gradually bright duration

Value	Description
0..127	The time from Indicator Light extinguished to bright. (Unit = 20ms)

Gradually extinguished duration

Value	
0..127	The time from Indicator Light bright to extinguished. (Unit = 20ms)

Keep bright duration

Value	Description
0..255	The time of Indicator Light keep bright. (Unit = 100ms)

Keep extinguished duration

Value	Description
0..255	The time of Indicator Light keep extinguished. (Unit = 100ms)

Note:
The Light Effect is displayed cyclically, and the maximum display duration is equal to the total duration of the tone playback. In other words, the Light Effect will be displayed in a loop until stop playing tone.

The minimum set of complete Light Effect is in the order of:
[Gradually bright]->[Keep bright]->[Gradually extinguished]->[Keep extinguished]

0x11(17) | WR | 0x32320003 | 4

Configure #2 Light Effect.

7	6	5	4	3	2	1	0
Gradually bright duration							
Gradually extinguished duration							
Keep bright duration							
Keep extinguished duration							

Gradually bright duration

Value	Description
0..127	The time from Indicator Light extinguished to bright. (Unit = 20ms)

Gradually extinguished duration

Value	
0..127	The time from Indicator Light bright to extinguished. (Unit = 20ms)

Keep bright duration

Value	Description
0..255	The time of Indicator Light keep bright. (Unit = 100ms)

Keep extinguished duration

<table>
<tr><td></td><td>
<table>
<tr><th>Value</th><th>Description</th></tr>
<tr><td>0..255</td><td>The time of Indicator Light keep extinguished. (Unit = 100ms)</td></tr>
</table>

Note:
The Light Effect is displayed cyclically, and the maximum display duration is equal to the total duration of the tone playback. In other words, the Light Effect will be displayed in a loop until stop playing tone.

The minimum set of complete Light Effect is in the order of:
[Gradually bright]->[Keep bright]->[Gradually extinguished]->[Keep extinguished]
</td><td></td><td></td><td></td></tr>
<tr><td>0x12(18)</td><td>
Configure #3 Light Effect.
<table>
<tr><th>7</th><th>6</th><th>5</th><th>4</th><th>3</th><th>2</th><th>1</th><th>0</th></tr>
<tr><td colspan="8">Gradually bright duration</td></tr>
<tr><td colspan="8">Gradually extinguished duration</td></tr>
<tr><td colspan="8">Keep bright duration</td></tr>
<tr><td colspan="8">Keep extinguished duration</td></tr>
</table>

Gradually bright duration
<table>
<tr><th>Value</th><th>Description</th></tr>
<tr><td>0..127</td><td>The time from Indicator Light extinguished to bright. (Unit = 20ms)</td></tr>
</table>

Gradually extinguished duration
<table>
<tr><th>Value</th><th></th></tr>
<tr><td>0..127</td><td>The time from Indicator Light bright to extinguished. (Unit = 20ms)</td></tr>
</table>

Keep bright duration
<table>
<tr><th>Value</th><th>Description</th></tr>
<tr><td>0..255</td><td>The time of Indicator Light keep bright. (Unit = 100ms)</td></tr>
</table>

Keep extinguished duration
<table>
<tr><th>Value</th><th>Description</th></tr>
<tr><td>0..255</td><td>The time of Indicator Light keep extinguished. (Unit = 100ms)</td></tr>
</table>

Note:
The Light Effect is displayed cyclically, and the maximum display duration is equal to the total duration of the tone playback. In other words, the Light Effect will be displayed in a loop until stop playing tone.

The minimum set of complete Light Effect is in the order of:
[Gradually bright]->[Keep bright]->[Gradually extinguished]->[Keep extinguished]
</td><td>WR</td><td>0x00210103</td><td>4</td></tr>
<tr><td>0x13(19)</td><td>
Configure #4 Light Effect.
<table>
<tr><th>7</th><th>6</th><th>5</th><th>4</th><th>3</th><th>2</th><th>1</th><th>0</th></tr>
<tr><td colspan="8">Gradually bright duration</td></tr>
<tr><td colspan="8">Gradually extinguished duration</td></tr>
<tr><td colspan="8">Keep bright duration</td></tr>
<tr><td colspan="8">Keep extinguished duration</td></tr>
</table>

Gradually bright duration
<table>
<tr><th>Value</th><th>Description</th></tr>
<tr><td>0..127</td><td>The time from Indicator Light extinguished to bright. (Unit = 20ms)</td></tr>
</table>

Gradually extinguished duration
<table>
<tr><th>Value</th><th></th></tr>
<tr><td>0..127</td><td>The time from Indicator Light bright to extinguished. (Unit = 20ms)</td></tr>
</table>

Keep bright duration
<table>
<tr><th>Value</th><th>Description</th></tr>
<tr><td>0..255</td><td>The time of Indicator Light keep bright. (Unit = 100ms)</td></tr>
</table>

Keep extinguished duration
<table>
<tr><th>Value</th><th>Description</th></tr>
</table>
</td><td>WR</td><td>0x21000003</td><td>4</td></tr>
</table>

<table>
<tr><td></td><td>
<table>
<tr><td>0..255</td><td>The time of Indicator Light keep extinguished. (Unit = 100ms)</td></tr>
</table>

Note:
The Light Effect is displayed cyclically, and the maximum display duration is equal to the total duration of the tone playback. In other words, the Light Effect will be displayed in a loop until stop playing tone.

The minimum set of complete Light Effect is in the order of:
[Gradually bright]->[Keep bright]->[Gradually extinguished]->[Keep extinguished]
</td><td></td><td></td><td></td></tr>
<tr><td>0x14(20)</td><td>
Configure #5 Light Effect.
<table>
<tr><th>7</th><th>6</th><th>5</th><th>4</th><th>3</th><th>2</th><th>1</th><th>0</th></tr>
<tr><td colspan="8">Gradually bright duration</td></tr>
<tr><td colspan="8">Gradually extinguished duration</td></tr>
<tr><td colspan="8">Keep bright duration</td></tr>
<tr><td colspan="8">Keep extinguished duration</td></tr>
</table>
Gradually bright duration
<table>
<tr><th>Value</th><th>Description</th></tr>
<tr><td>0..127</td><td>The time from Indicator Light extinguished to bright. (Unit = 20ms)</td></tr>
</table>
Gradually extinguished duration
<table>
<tr><th>Value</th><th></th></tr>
<tr><td>0..127</td><td>The time from Indicator Light bright to extinguished. (Unit = 20ms)</td></tr>
</table>
Keep bright duration
<table>
<tr><th>Value</th><th>Description</th></tr>
<tr><td>0..255</td><td>The time of Indicator Light keep bright. (Unit = 100ms)</td></tr>
</table>
Keep extinguished duration
<table>
<tr><th>Value</th><th>Description</th></tr>
<tr><td>0..255</td><td>The time of Indicator Light keep extinguished. (Unit = 100ms)</td></tr>
</table>
Note:
The Light Effect is displayed cyclically, and the maximum display duration is equal to the total duration of the tone playback. In other words, the Light Effect will be displayed in a loop until stop playing tone.

The minimum set of complete Light Effect is in the order of:
[Gradually bright]->[Keep bright]->[Gradually extinguished]->[Keep extinguished]
</td><td>WR</td><td>0x0000000A</td><td>4</td></tr>
<tr><td>0x15(21)</td><td>
Configure #6 Light Effect.
<table>
<tr><th>7</th><th>6</th><th>5</th><th>4</th><th>3</th><th>2</th><th>1</th><th>0</th></tr>
<tr><td colspan="8">Gradually bright duration</td></tr>
<tr><td colspan="8">Gradually extinguished duration</td></tr>
<tr><td colspan="8">Keep bright duration</td></tr>
<tr><td colspan="8">Keep extinguished duration</td></tr>
</table>
Gradually bright duration
<table>
<tr><th>Value</th><th>Description</th></tr>
<tr><td>0..127</td><td>The time from Indicator Light extinguished to bright. (Unit = 20ms)</td></tr>
</table>
Gradually extinguished duration
<table>
<tr><th>Value</th><th></th></tr>
<tr><td>0..127</td><td>The time from Indicator Light bright to extinguished. (Unit = 20ms)</td></tr>
</table>
Keep bright duration
<table>
<tr><th>Value</th><th>Description</th></tr>
<tr><td>0..255</td><td>The time of Indicator Light keep bright. (Unit = 100ms)</td></tr>
</table>
Keep extinguished duration
<table>
<tr><th>Value</th><th>Description</th></tr>
<tr><td>0..255</td><td>The time of Indicator Light keep extinguished. (Unit = 100ms)</td></tr>
</table>
</td><td>WR</td><td>0x00000A00</td><td>4</td></tr>
</table>

<table>
<tr><td></td><td>Note:
The Light Effect is displayed cyclically, and the maximum display duration is equal to the total duration of the tone playback. In other words, the Light Effect will be displayed in a loop until stop playing tone.

The minimum set of complete Light Effect is in the order of:
[Gradually bright]->[Keep bright]->[Gradually extinguished]->[Keep extinguished]</td><td></td><td></td><td></td></tr>
<tr><td>0x16(22)</td><td>Configure #7 Light Effect.
<table>
<tr><th>7</th><th>6</th><th>5</th><th>4</th><th>3</th><th>2</th><th>1</th><th>0</th></tr>
<tr><td colspan="8">Gradually bright duration</td></tr>
<tr><td colspan="8">Gradually extinguished duration</td></tr>
<tr><td colspan="8">Keep bright duration</td></tr>
<tr><td colspan="8">Keep extinguished duration</td></tr>
</table>
Gradually bright duration
<table>
<tr><th>Value</th><th>Description</th></tr>
<tr><td>0..127</td><td>The time from Indicator Light extinguished to bright. (Unit = 20ms)</td></tr>
</table>
Gradually extinguished duration
<table>
<tr><th>Value</th><th></th></tr>
<tr><td>0..127</td><td>The time from Indicator Light bright to extinguished. (Unit = 20ms)</td></tr>
</table>
Keep bright duration
<table>
<tr><th>Value</th><th>Description</th></tr>
<tr><td>0..255</td><td>The time of Indicator Light keep bright. (Unit = 100ms)</td></tr>
</table>
Keep extinguished duration
<table>
<tr><th>Value</th><th>Description</th></tr>
<tr><td>0..255</td><td>The time of Indicator Light keep extinguished. (Unit = 100ms)</td></tr>
</table>
Note:
The Light Effect is displayed cyclically, and the maximum display duration is equal to the total duration of the tone playback. In other words, the Light Effect will be displayed in a loop until stop playing tone.

The minimum set of complete Light Effect is in the order of:
[Gradually bright]->[Keep bright]->[Gradually extinguished]->[Keep extinguished]</td><td>WR</td><td>0x21000001</td><td>4</td></tr>
<tr><td>0x20(32)</td><td>Configure how to send Basic Set to nodes in Group 2.
<table>
<tr><th>Value</th><th>Description</th></tr>
<tr><td>0</td><td>Don’t send Basic Set.</td></tr>
<tr><td>1</td><td>When Endpoint 1 starts playing tone, send Basic Set 0xFF.
When Endpoint 1 stops playing tone, don’t send Basic Set.</td></tr>
<tr><td>2</td><td>When Endpoint 1 starts playing tone, send Basic Set 0x00.
When Endpoint 1 stops playing tone, don’t send Basic Set.</td></tr>
<tr><td>3</td><td>When Endpoint 1 starts playing tone, send Basic Set 0xFF.
When Endpoint 1 stops playing tone, send Basic Set 0x00.</td></tr>
<tr><td>4</td><td>When Endpoint 1 starts playing tone, send Basic Set 0x00.
When Endpoint 1 stops playing tone, send Basic Set 0xFF.</td></tr>
</table></td><td>WR</td><td>3</td><td>1</td></tr>
<tr><td>0x21(33)</td><td>Configure how to send Basic Set to nodes in Group 3.
<table>
<tr><th>Value</th><th>Description</th></tr>
<tr><td>0</td><td>Don’t send Basic Set.</td></tr>
<tr><td>1</td><td>When Endpoint 2 starts playing tone, send Basic Set 0xFF.
When Endpoint 2 stops playing tone, don’t send Basic Set.</td></tr>
<tr><td>2</td><td>When Endpoint 2 starts playing tone, send Basic Set 0x00.
When Endpoint 2 stops playing tone, don’t send Basic Set.</td></tr>
<tr><td>3</td><td>When Endpoint 2 starts playing tone, send Basic Set 0xFF.
When Endpoint 2 stops playing tone, send Basic Set 0x00.</td></tr>
<tr><td>4</td><td>When Endpoint 2 starts playing tone, send Basic Set 0x00.
When Endpoint 2 stops playing tone, send Basic Set 0xFF.</td></tr>
</table></td><td>WR</td><td>3</td><td>1</td></tr>
<tr><td>0x22(34)</td><td>Configure how to send Basic Set to nodes in Group 4.</td><td>WR</td><td>3</td><td>1</td></tr>
</table>

	Value / Description 0 / Don’t send Basic Set. 1 / When Endpoint 3 starts playing tone, send Basic Set 0xFF. When Endpoint 3 stops playing tone, don’t send Basic Set. 2 / When Endpoint 3 starts playing tone, send Basic Set 0x00. When Endpoint 3 stops playing tone, don’t send Basic Set. 3 / When Endpoint 3 starts playing tone, send Basic Set 0xFF. When Endpoint 3 stops playing tone, send Basic Set 0x00. 4 / When Endpoint 3 starts playing tone, send Basic Set 0x00. When Endpoint 3 stops playing tone, send Basic Set 0xFF.			
0x23(35)	**Configure how to send Basic Set to nodes in Group 5.** Value / Description 0 / Don’t send Basic Set. 1 / When Endpoint 4 starts playing tone, send Basic Set 0xFF. When Endpoint 4 stops playing tone, don’t send Basic Set. 2 / When Endpoint 4 starts playing tone, send Basic Set 0x00. When Endpoint 4 stops playing tone, don’t send Basic Set. 3 / When Endpoint 4 starts playing tone, send Basic Set 0xFF. When Endpoint 4 stops playing tone, send Basic Set 0x00. 4 / When Endpoint 4 starts playing tone, send Basic Set 0x00. When Endpoint 4 stops playing tone, send Basic Set 0xFF.	WR	3	1
0x24(36)	**Configure how to send Basic Set to nodes in Group 6.** Value / Description 0 / Don’t send Basic Set. 1 / When Endpoint 5 starts playing tone, send Basic Set 0xFF. When Endpoint 5 stops playing tone, don’t send Basic Set. 2 / When Endpoint 5 starts playing tone, send Basic Set 0x00. When Endpoint 5 stops playing tone, don’t send Basic Set. 3 / When Endpoint 5 starts playing tone, send Basic Set 0xFF. When Endpoint 5 stops playing tone, send Basic Set 0x00. 4 / When Endpoint 5 starts playing tone, send Basic Set 0x00. When Endpoint 5 stops playing tone, send Basic Set 0xFF.	WR	3	1
0x25(37)	**Configure how to send Basic Set to nodes in Group 7.** Value / Description 0 / Don’t send Basic Set. 1 / When Endpoint 6 starts playing tone, send Basic Set 0xFF. When Endpoint 6 stops playing tone, don’t send Basic Set. 2 / When Endpoint 6 starts playing tone, send Basic Set 0x00. When Endpoint 6 stops playing tone, don’t send Basic Set. 3 / When Endpoint 6 starts playing tone, send Basic Set 0xFF. When Endpoint 6 stops playing tone, send Basic Set 0x00. 4 / When Endpoint 6 starts playing tone, send Basic Set 0x00. When Endpoint 6 stops playing tone, send Basic Set 0xFF.	WR	3	1
0x26(38)	**Configure how to send Basic Set to nodes in Group 8.** Value / Description 0 / Don’t send Basic Set. 1 / When Endpoint 7 starts playing tone, send Basic Set 0xFF. When Endpoint 7 stops playing tone, don’t send Basic Set. 2 / When Endpoint 7 starts playing tone, send Basic Set 0x00. When Endpoint 7 stops playing tone, don’t send Basic Set. 3 / When Endpoint 7 starts playing tone, send Basic Set 0xFF. When Endpoint 7 stops playing tone, send Basic Set 0x00. 4 / When Endpoint 7 starts playing tone, send Basic Set 0x00. When Endpoint 7 stops playing tone, send Basic Set 0xFF.	WR	3	1
0x27(39)	**Configure how to send Basic Set to nodes in Group 9.** Value / Description 0 / Don’t send Basic Set. 1 / When Endpoint 8 starts playing tone, send Basic Set 0xFF. When Endpoint 8 stops playing tone, don’t send Basic Set. 2 / When Endpoint 8 starts playing tone, send Basic Set 0x00.	WR	3	1

<table>
<tr><td></td><td>
<table>
<tr><td></td><td>When Endpoint 8 stops playing tone, don’t send Basic Set.</td></tr>
<tr><td>3</td><td>When Endpoint 8 starts playing tone, send Basic Set 0xFF.
When Endpoint 8 stops playing tone, send Basic Set 0x00.</td></tr>
<tr><td>4</td><td>When Endpoint 8 starts playing tone, send Basic Set 0x00.
When Endpoint 8 stops playing tone, send Basic Set 0xFF.</td></tr>
</table>
</td><td></td><td></td><td></td></tr>
<tr><td>0x30(48)</td><td>
Tigger Unpairing Button Mode (Write Only)
<table>
<tr><th>7</th><th>6</th><th>5</th><th>4</th><th>3</th><th>2</th><th>1</th><th>0</th></tr>
<tr><td>Reserved</td><td>Reserved</td><td>Reserved</td><td>Reserved</td><td>Reserved</td><td>#3 Button</td><td>#2 Button</td><td>#1 Button</td></tr>
</table>
Valid value:
<table>
<tr><th>Value</th><th>Description</th></tr>
<tr><td>1</td><td>Tigger Unpairing #1 Button Mode.</td></tr>
<tr><td>2</td><td>Tigger Unpairing #2 Button Mode.</td></tr>
<tr><td>3</td><td>Tigger Unpairing #2 and #1 Button Mode.</td></tr>
<tr><td>4</td><td>Tigger Unpairing #3 Button Mode.</td></tr>
<tr><td>5</td><td>Tigger Unpairing #3 and #1 Button Mode.</td></tr>
<tr><td>6</td><td>Tigger Unpairing #3 and #2 Button Mode.</td></tr>
<tr><td>7</td><td>Tigger Unpairing #3, #2 and #1 Button Mode.</td></tr>
</table>
Note:
1. Can trigger unpairing multiple Buttons at one time.
2. User does not need to do anything to Button.
3. Indicator Light will quickly flash white light 3 times when Unpairing Button Mode finishes.
</td><td>W</td><td>-</td><td>1</td></tr>
<tr><td>0x31(49)</td><td>
Tigger Pairing Button Mode (Write Only)
<table>
<tr><th>7</th><th>6</th><th>5</th><th>4</th><th>3</th><th>2</th><th>1</th><th>0</th></tr>
<tr><td>Reserved</td><td>Reserved</td><td>Reserved</td><td>Reserved</td><td>Reserved</td><td>#3 Button</td><td>#2 Button</td><td>#1 Button</td></tr>
</table>
Valid value:
<table>
<tr><th>Value</th><th>Description</th></tr>
<tr><td>0</td><td>Exit Pairing Button Mode.</td></tr>
<tr><td>1</td><td>Tigger Pairing #1 Button Mode.</td></tr>
<tr><td>2</td><td>Tigger Pairing #2 Button Mode.</td></tr>
<tr><td>4</td><td>Tigger Pairing #3 Button Mode.</td></tr>
</table>
Note:
1. Can NOT trigger pairing multiple Buttons at one time.
2. Pairing time is up to 10 seconds. In this time period, user MUST manually click Ring Button 3 times quickly. Otherwise it cannot be paired successfully.
3. Each successful pairing will overwrite the previous paired Button which has the same Button Number.
</td><td>W</td><td>-</td><td>1</td></tr>
<tr><td>0x32(50)</td><td>
Report which Pairing Button Mode is triggered (Read Only)
<table>
<tr><th>7</th><th>6</th><th>5</th><th>4</th><th>3</th><th>2</th><th>1</th><th>0</th></tr>
<tr><td>Reserved</td><td>Reserved</td><td>Reserved</td><td>Reserved</td><td>Reserved</td><td>#3 Button</td><td>#2 Button</td><td>#1 Button</td></tr>
</table>
Valid value:
<table>
<tr><th>Value</th><th>Description</th></tr>
<tr><td>0</td><td>There is no Pairing Button Mode being triggered.</td></tr>
<tr><td>1</td><td>Pairing #1 Button Mode is triggered.</td></tr>
<tr><td>2</td><td>Pairing #2 Button Mode is triggered.</td></tr>
<tr><td>4</td><td>Pairing #3 Button Mode is triggered.</td></tr>
</table>
Note:
Once Pairing Button Mode is triggered, node will automatically send this configuration report via Lifeline to inform which Button is waiting for being paired.
</td><td>R</td><td>0</td><td>1</td></tr>
</table>

<table>
<tr><td>0x33(51)</td><td>

Report which Buttons had been paired (Read Only)

7	6	5	4	3	2	1	0
Reserved	Reserved	Reserved	Reserved	Reserved	#3 Button	#2 Button	#1 Button

Valid value:

Value	Description
0	There is no paired Button.
1	#1 Button had been paired.
2	#2 Button had been paired.
3	#2 and #1 Button had been paired.
4	#3 Button had been paired.
5	#3 and #1 Button had been paired.
6	#3 and #2 Button had been paired.
7	#3, #2 and #1 Button had been paired.

Note:
Once Unpairing or Pairing Button Mode finishes, node will automatically send this configuration report via Lifeline to inform which Buttons had been paired.

This parameter does not restore to the default value when Chime is removed from the network or reset the factory settings.

</td><td>R</td><td>0</td><td>1</td></tr>
<tr><td>0x34(52)</td><td>

Get the information of #1 Button (Read Only)

7	6	5	4	3	2	1	0
Button Battery Voltage MSB							
Button Battery Voltage LSB							
Button Software Version MSB							
Button Software Version LSB							

Button Battery Voltage MSB & LSB

Value	Description
0	Button is unpaired.
1-32767	The unit of Battery Voltage is mV.

Button Software Version MSB & LSB

Value	Description
0	Button is unpaired.
1-65535	For example, if Button Software Version equals to 0x0100, it means its version is 1.00.

Note:
This parameter does not restore to the default value when Chime is removed from the network or reset the factory settings.

</td><td>R</td><td>0x00000000</td><td>4</td></tr>
<tr><td>0x35(53)</td><td>

Get the information of #2 Button (Read Only)

7	6	5	4	3	2	1	0
Button Battery Voltage MSB							
Button Battery Voltage LSB							
Button Software Version MSB							
Button Software Version LSB							

Button Battery Voltage MSB & LSB

Value	Description
0	Button is unpaired.
1-32767	The unit of Battery Voltage is mV.

Button Software Version MSB & LSB

Value	Description
0	Button is unpaired.
1-65535	For example, if Button Software Version equals to 0x0100, it means its version is 1.00.

</td><td>R</td><td>0x00000000</td><td>4</td></tr>
</table>

<table>
<tr><td></td><td>Note:
This parameter does not restore to the default value when Chime is removed from the network or reset the factory settings.</td><td></td><td></td><td></td></tr>
<tr><td>0x36(54)</td><td>Get the information of #3 Button (Read Only)
<table>
<tr><th>7</th><th>6</th><th>5</th><th>4</th><th>3</th><th>2</th><th>1</th><th>0</th></tr>
<tr><td colspan="8">Button Battery Voltage MSB</td></tr>
<tr><td colspan="8">Button Battery Voltage LSB</td></tr>
<tr><td colspan="8">Button Software Version MSB</td></tr>
<tr><td colspan="8">Button Software Version LSB</td></tr>
</table>
Button Battery Voltage MSB & LSB
<table>
<tr><th>Value</th><th>Description</th></tr>
<tr><td>0</td><td>Button is unpaired.</td></tr>
<tr><td>1-32767</td><td>The unit of Battery Voltage is mV.</td></tr>
</table>
Button Software Version MSB & LSB
<table>
<tr><th>Value</th><th>Description</th></tr>
<tr><td>0</td><td>Button is unpaired.</td></tr>
<tr><td>1-65535</td><td>For example, if Button Software Version equals to 0x0100, it means its version is 1.00.</td></tr>
</table>
Note:
This parameter does not restore to the default value when Chime is removed from the network or reset the factory settings.</td><td>R</td><td>0x00000000</td><td>4</td></tr>
<tr><td>0x60(96)</td><td>Enable or Disable the ability that click the Action Button to stop a playing tone.
<table>
<tr><th>Value</th><th>Description</th></tr>
<tr><td>0</td><td>Disable</td></tr>
<tr><td>1</td><td>Enable</td></tr>
</table></td><td>WR</td><td>0</td><td>1</td></tr>
<tr><td>0xFF(255)</td><td>Factory Reset or Initialization (Write Only)
<table>
<tr><th>Value</th><th>Description</th></tr>
<tr><td>1431655765
(0x55555555)</td><td>Factory Reset:
Restore the product to factory settings and remove from the network.</td></tr>
<tr><td>Other</td><td>Initialization:
Initialize all configuration parameters to default values.</td></tr>
</table>
Note:
Parameter 51/52/53/54 will not restore the configuration settings to the default when Factory Reset or Initialization is performed.</td><td>W</td><td>-</td><td>4</td></tr>
</table>