FIBARO®
HOME INTELLIGENCE

OPERATING
MANUAL

EN

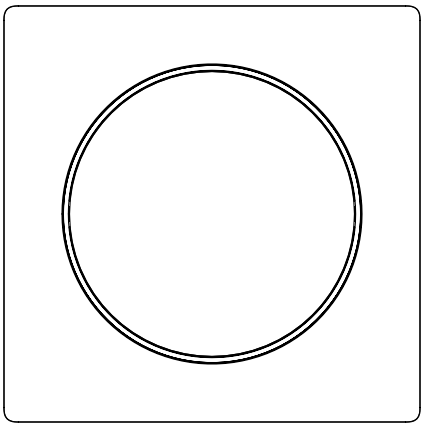

FIBARO WALLI DOUBLE SWITCH

FGWDSEU-221

v1.0

Table of contents

1: Important safety information 4
2: Description and features 5
2.1: Description 5
2.2: Main features 5
3: Specifications 6
4: Installation 7
4.1: Before installation 7
4.2: Preparing for installation 8
4.3: Electrical connection 8
4.4: Assembling the device 9
4.5: Activating the device 10
5: Adding to Z-Wave network 11
5.1: Adding manually 11
5.2: Adding using SmartStart 12
6: Removing from Z-Wave network 13
7: Operating the device 14
7.1: Controls 14
7.2: Single/Double Switch operating mode 14
7.3: Button control 15
7.4: Visual indications 15
7.5: Menu 16
7.6: Resetting to factory defaults 16
8: Power and energy metering 17
9: Configuration 18
9.1: Associations 18
9.2: Advanced parameters 21
10: Z-Wave specification 36
11: Parts compatibility 39
12: Regulations 40

1: Important safety information

Read this manual before attempting to install the device!

Failure to observe recommendations included in this manual may be dangerous or cause a violation of the law. The manufacturer, Fibar Group S.A. will not be held responsible for any loss or damage resulting from not following the instructions of operating manual.

DANGER OF ELECTROCUTION!

The device is designed to operate in electrical home installation. Faulty connection or use may result in fire or electric shock.

All works on the device may be performed only by a qualified and licensed electrician. Observe national regulations.

Even when the device is turned off, voltage may be present at its terminals. Any maintenance introducing changes into the configuration of connections or the load must be always performed with disabled fuse.

To avoid risk of electrical shock, do not operate the device with wet or moist hands.

Do not modify!

Do not modify this device in any way not included in this manual.

Other devices

The manufacturer, Fibar Group S.A. will not be held responsible for any damage or loss of warranty privileges for other connected devices if the connection is not compliant with their manuals.

This product is intended for indoor use only in dry locations.

Do not use in damp or wet locations, near a bathtub, sink, shower, swimming pool, or anywhere else where water or moisture are present.

Not a toy!

This product is not a toy. Keep away from children and animals!

2: Description and features

2.1: Description

FIBARO Walli Double Switch is a smart wall switch designed to control one or two light sources via Z-Wave network.

It measures active power and energy consumed by the controlled load.

You can install it with provided cover plate and switch button or other compatible.

2.2: Main features

- Can be used with:
  - conventional incandescent and halogen light sources,
  - LED lamps,
  - fluorescent lamps,
  - electronic transformers (for ELV halogen lamps and LED bulbs),
  - ferromagnetic transformers (for MLV halogen lamps).
- Can be used with FIBARO Walli covers or other compatible (see “Parts compatibility” on page 39):
  - GIRA – System 55 (Standard 55, E2, Event, Event Clear),
  - Legrand – Céliane,
  - Schneider – Odace.
- Active power and energy consumption metering.
- Supports Z-Wave network Security Modes: S0 with AES-128 encryption and S2 Authenticated with PRNG-based encryption.
- Works as a Z-Wave signal repeater (all non-battery operated devices within the network will act as repeaters to increase reliability of the network).
- May be used with all devices certified with the Z-Wave Plus certificate and should be compatible with such devices produced by other manufacturers.

i The device is a Security Enabled Z-Wave Plus product and a Security Enabled Z-Wave Controller must be used in order to fully utilize the product.

3: Specifications

Power supply	110-230V~ 50/60 Hz
Rated load current	13A per one channel 16A total
Compatible load types	incandescent bulbs fluorescent lamps electronic transformers ferromagnetic transformers LED
Active element	micro-gap relay μ
Recommended external overcurrent protection	10A type B circuit breaker (EU) 13A type B circuit breaker (Sweden)
For installation in boxes	Ø = 60mm, depth ≥ 40mm
Recommended wires	cross-section area between 1.5-4.0mm^2, stripped 11.5-13mm of insulation
Operating temperature	0–35°C
Ambient humidity	10–95% RH without condensation
Radio protocol	Z-Wave (500 series chip)
Radio frequency band	868.0–868.6MHz; 869.7–870.0MHz
Max. transmitting power	+6dBm
Range	up to 50m outdoors up to 40m indoors (depending on terrain and building structure)
Dimensions (Height x Width x Depth)	86 x 86 x 51 mm
Compliance with EU directives	RoHS 2011/65/EU RED 2014/53/EU

i Radio frequency of individual device must be same as your Z-Wave controller. Check information on the box or consult your dealer if you are not sure.

4: Installation

4.1: Before installation

⚠ **Connecting the device in a manner inconsistent with this manual may cause risk to health, life or material damage.**

- **Do not** power the device before fully assembling it in the mounting box,
- Connect only in accordance with one of the diagrams,
- Install only in flush mounting boxes compliant with a relevant national safety standards and with depth no less than 40mm,
- **Do not** connect devices which are not compliant with the specification or relevant safety standards,
- **Do not** connect heating devices,
- **Do not** connect SELV or PELV circuits.
- Make sure you have all required parts when installing with covers other than FIBARO (see “Parts compatibility” on page 39).

Device parts:

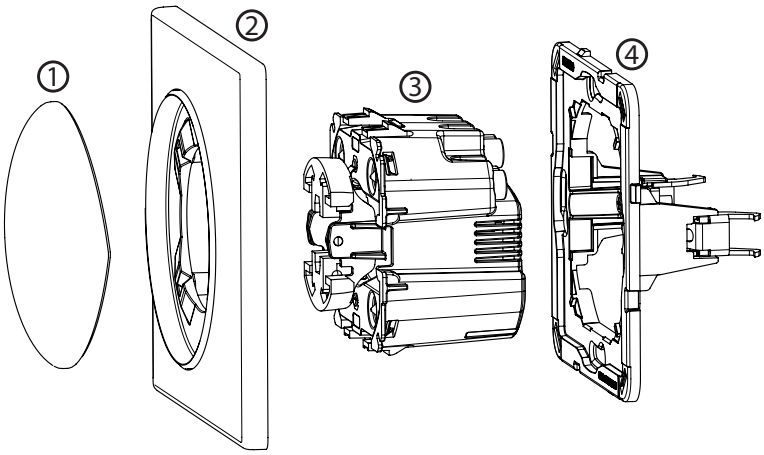

1 – switch button, 2 – cover plate, 3 – unit (device), 4 – mounting frame

Notes for diagrams:

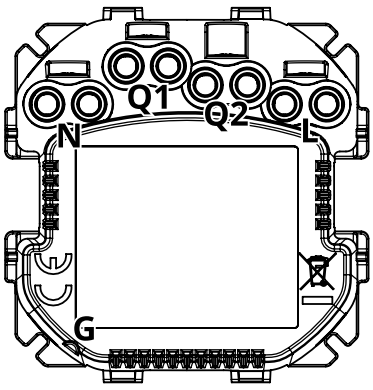

N – terminal for neutral wire

Q1 – output terminal of the 1st channel

Q2 – output terminal of the 2nd channel

L – terminal for live wire

G – groove used to measure wire length

4.2: Preparing for installation

Prepare wires by removing 11.5-13mm of insulation from their ends. You can use groove on the side of the unit to measure the length.

When installing with FIBARO or GIRA cover plates:

1. Pull out the switch button.
2. Take off the cover plate.

When installing with Legrand or Schneider cover plates:

1. Pull out the original switch button.
2. Take off the original cover plate.
3. Dismount the original mounting frame.
4. Snap the new mounting frame*.

* Additional mounting frames are sold separately.

4.3: Electrical connection

1. Switch off the mains voltage (disable the fuse).
2. Connect with one of the diagrams below:

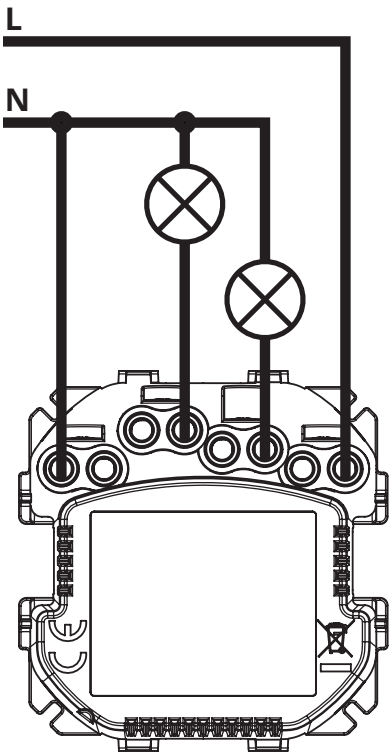

Diagram 1: Example connection for double switch configuration

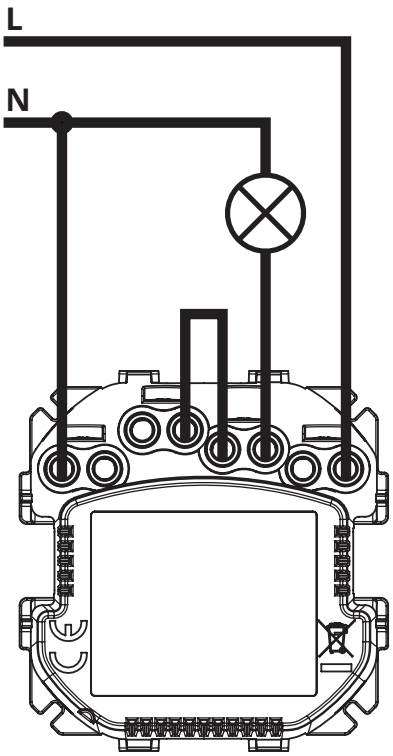

Diagram 2: Example connection for single switch configuration

3. Verify correctness of connection.
4. Tighten the terminal screws using PH1 screwdriver.

4.4: Assembling the device

i When installing the device in the mounting box orient the device with terminal screws going up or to the left (for horizontal button position) to ensure button order.

i When installing with cover plates other than FIBARO, we recommend disabling the LED by changing parameter 13 to 0.

When installing with FIBARO cover plates:

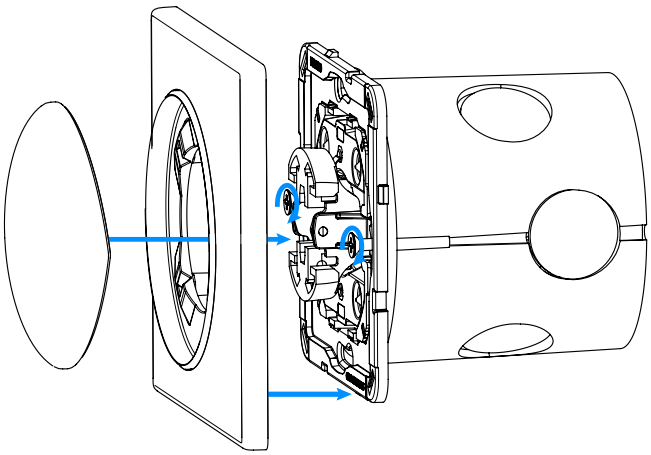

1. Insert the device with mounting frame into the mounting box and secure with mounting claws and screws.
2. Snap the cover plate to the device.
3. Snap the switch button to the device.

When installing with GIRA cover plates:

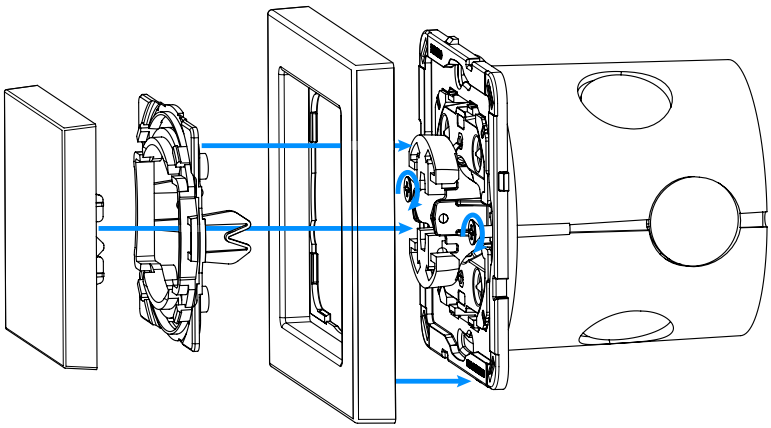

1. Insert the device with mounting frame into the mounting box and secure with mounting claws and screws.
2. Snap the new cover plate to the device.
3. Snap the switch button adapter* to the device.
4. Snap the new switch button to the device.

When installing with Legrand cover plates:

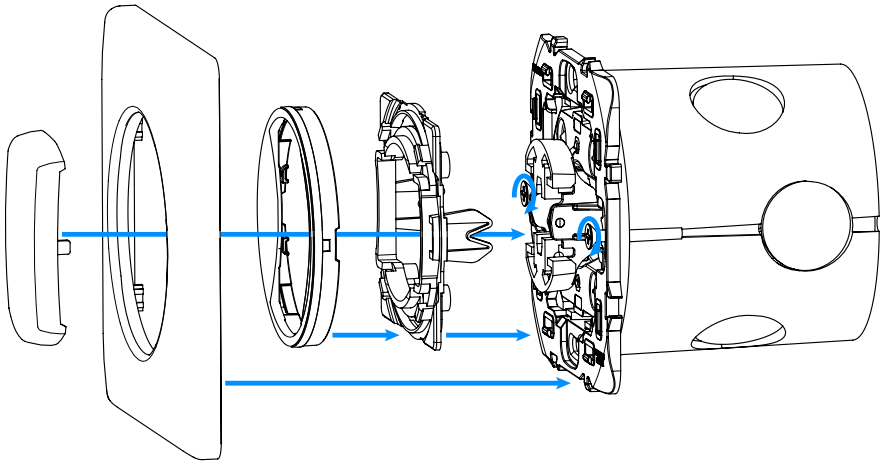

1. Insert the device with mounting frame* into the mounting box and secure with mounting claws and screws.
2. Snap the switch button adapter* to the device.
3. Snap the new inner cover plate to the device.
4. Snap the new outer cover plate to the device.
5. Snap the new switch button to the device.

When installing with Schneider cover plates:

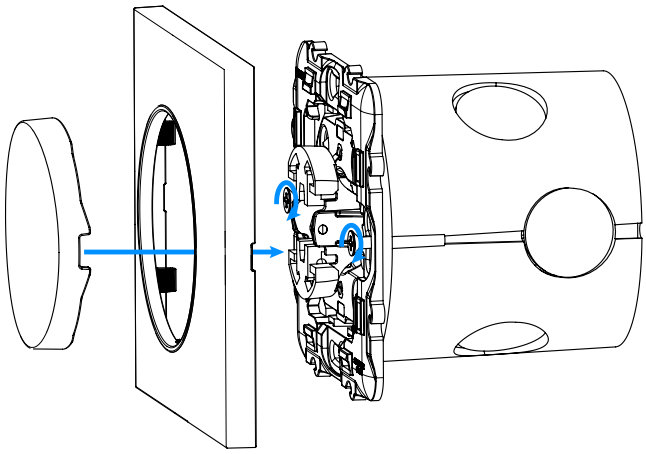

1. Insert the device with mounting frame* into the mounting box and secure with mounting claws and screws.
2. Snap the new cover plate to the device.
3. Snap the new switch button to the device.

* Switch button adapter and additional mounting frames are sold separately.

4.5: Activating the device

1. If the device fully assembled, switch on the mains voltage.
2. LED ring light means the device is powered and can be added to the Z-Wave network.

5: Adding to Z-Wave network

Adding (Inclusion) – Z-Wave device learning mode, allowing to add the device to existing Z-Wave network.

> i If you want to change single/double switch operating mode (see “Single/Double Switch operating mode” on page 14), you must do it before adding the device to the Z-Wave network.

5.1: Adding manually

To add the device to the Z-Wave network **manually**:

1. Power the device.
2. Set the main controller in (Security/non-Security Mode) add mode (see the controller’s manual).
3. Quickly, three times click one of the buttons.
4. If you are adding in Security S2 Authenticated, input the underlined part of the DSK (label on the bottom of the box).
5. LED will start blinking yellow, wait for the adding process to end.
6. Adding result will be confirmed by the Z-Wave controller’s message and the LED frame:
   - **Green** – successful (non-secure, S0, S2 non-authenticated),
   - **Magenta** – successful (Security S2 Authenticated),
   - **Red** – not successful.

5.2: Adding using SmartStart

SmartStart enabled products can be added into a Z-Wave network by scanning the Z-Wave QR Code present on the product with a controller providing SmartStart inclusion. SmartStart product will be added automatically within 10 minutes of being switched on in the network range.

To add the device to the Z-Wave network **using SmartStart**:

1. To use SmartStart your controller needs to support Security S2 (see the controller's manual).
2. Enter the full DSK string code to your controller. If your controller is capable of QR scanning, scan the QR code placed on the label on the bottom of the box.
3. Power the device.
4. Wait for the adding process to start (up to few minutes), which is signalled with yellow LED blinking.
5. Adding result will be confirmed by the Z-Wave controller's message and the LED frame:
   - **Green** – successful (non-secure, S0, S2 non-authenticated),
   - **Magenta** – successful (Security S2 Authenticated),
   - **Red** – not successful.

   i In case of problems with adding the device, please reset the device and repeat the adding procedure.

6: Removing from Z-Wave network

Removing (Exclusion) – Z-Wave device learning mode, allowing to remove the device from existing Z-Wave network. Removing also results in resetting the device to factory defaults.

To **remove** the device from the Z-Wave network:

1. Power the device.
2. Set the main controller into remove mode (see the controller's manual).
3. Quickly, three times click one of the buttons.
4. LED will start blinking yellow, wait for the removing process to end.
5. Successful removing will be confirmed by the Z-Wave controller's message and red LED colour.

7: Operating the device

7.1: Controls

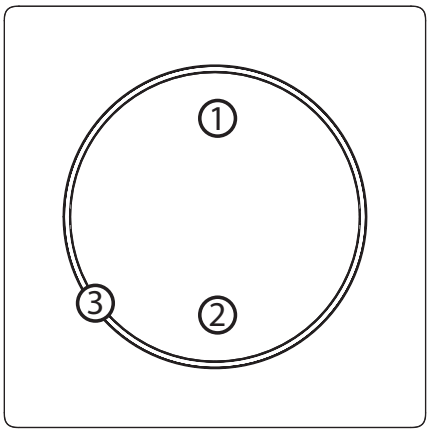

1. First button,
2. Second button,
3. LED ring.

7.2: Single/Double Switch operating mode

The device can work as single or double switch:

- Double Switch mode (default) – the device can control two separate loads, but they can be up to 13A per channel and 16A total.
- Single Switch mode – the device can control only one load, but it can be rated up to 16A.

> **i** Changing operating mode must performed before adding it to the Z-Wave network!

To change operating mode before adding to Z-Wave network:

1. Quickly, three times click, then press and hold one of the buttons to enter the menu.
2. Release button when the device glows white.
3. Quickly click the button to confirm.
4. The device will change and signal the new operating mode:
   - 1 white blink – Single Switch mode,
   - 2 white blinks – Double Switch mode.

To check operating mode after adding to Z-Wave network:

1. Quickly, three times click, then press and hold one of the buttons to enter the menu.
2. Release button when the device glows white.
3. Quickly click the button to confirm.

4. The device will signal the operating mode:
   - 1 white blink – Single Switch mode,
   - 2 white blinks – Double Switch mode.

7.3: Button control

Controlling connected loads

Perform following actions on one of the buttons to change state of the connected load. Button operation is configurable using parameters 20 and 24.

Double Switch mode – the 1st button controls the 1st channel and the 2nd button controls the 2nd channel:

- Click – change to the opposite state, ON/OFF (by default).

Single Switch mode – both buttons control the load:

- Click – change to the opposite state, ON/OFF (by default).

Other actions

Perform following actions on one of the buttons to:

- 3xClick – start learn mode to add/remove to/from Z-Wave network,
- 1,2,3xClick/hold/release – activate scene in the controller for specific action (requires configuration using parameters 40 and 41),
- 3xClick then press and hold – enter the menu.

7.4: Visual indications

The built-in LED light shows current device status.

After powering the device:

- Green – device added to a Z-Wave network (non-secure, S0, S2 non-authenticated),
- Magenta – device added to a Z-Wave network (Security S2 Authenticated),
- Red – device not added to a Z-Wave network.

State of the device:

- White – load turned ON (configurable using parameters 11 and 12).

Update:

- Blinking cyan – update in progress,
- Green – update successful,
- Red – update not successful.

Menu:

- Blinking green – entering the menu (added as non-secure, S0, S2 non-authenticated),
- Blinking magenta – entering the menu (added as Security S2 Authenticated),
- Blinking red – entering the menu (not added to a Z-Wave network),
- White – change or check operating mode (single or double switch),
- Green – reset energy consumption memory,
- Yellow – reset to factory defaults.

7.5: Menu

Menu allows to perform Z-Wave network actions. In order to use the menu:

1. Quickly, three times click, then press and hold one of the buttons to enter the menu, device blinks to signal adding status (see 7.4: Visual indications).
2. Release the button when device signals desired position with colour:
   - **WHITE** – change or check single/double switch mode
   - **GREEN** – reset energy consumption memory
   - **YELLOW** – reset to factory defaults
3. Quickly click the button to confirm.

7.6: Resetting to factory defaults

Reset procedure allows to restore the device back to its factory settings, which means all information about the Z-Wave controller and user configuration will be deleted. Resetting to factory defaults does not reset energy consumption memory.

> i Resetting the device is not the recommended way of removing the device from the Z-Wave network. Use reset procedure only if the primary controller is missing or inoperable. Certain device removal can be achieved by the procedure of removing described.

1. Quickly, three times click, then press and hold one of the buttons to enter the menu.
2. Release button when the device glows yellow.
3. Quickly click the button to confirm.
4. After few seconds the device will be restarted, which is signalled with red LED colour.

8: Power and energy metering

The device allows for the active power and energy consumption monitoring. Data is sent to the main Z-Wave controller, e.g. Home Center.

Measuring is carried out by the most advanced microcontroller technology, assuring maximum accuracy and precision (+/- 1% for loads greater than 10W).

Electric active power – power that energy receiver is changing into a work or a heat. The unit of active power is Watt [W].

> i Power measurement can contain mains voltage fluctuations within +/- 10%.

Electric energy – energy consumed by a device through a time period. Consumers of electricity in households are billed by suppliers on the basis of active power used in given unit of time. Most commonly measured in kilowatt-hour [kWh]. One kilowatt-hour is equal to one kilowatt of power consumed over period of one hour, 1kWh = 1000Wh.

Resetting consumption memory:

1. Quickly, three times click, then press and hold one of the buttons to enter the menu.
2. Release button when the device glows green.
3. Quickly click the button to confirm.
4. Device will blink two times green to confirm.

> i The device stores periodically (every hour) the consumption data in the device memory. Disconnecting the module from the power supply will not erase stored energy consumption data.

> i Changing the device operating mode (Single/Double) resets energy consumption memory.

9: Configuration

9.1: Associations

Association (linking devices) – direct control of other devices within the Z-Wave system network.

Associations allow:

- reporting the device status to the Z-Wave controller (using Lifeline group),
- creating simple automations by controlling other devices without participation of the main controller (using groups assigned to actions on the device).

> i Commands send to 2nd, 3rd, 4th and 5th association groups reflect button operation according to device configuration, e.g. turning the first channel on using button will send frame responsible for the same action.

For Single Switch Mode the device provides the association of 3 groups:

1st association group – "Lifeline" reports the device status and allows for assigning single device only (main controller by default).

2nd association group – "On/Off" is used to turn the associated devices on/off reflecting button operation (uses Basic command class).

3rd association group – "Dimmer" is used to change level of associated devices reflecting button operation (uses Switch Multilevel command class).

For Double Switch Mode the device provides the association of 5 groups:

1st association group – "Lifeline" reports the device status and allows for assigning single device only (main controller by default).

2nd association group – "On/Off (1)" is used to turn the associated devices on/off reflecting button operation for 1st channel (uses Basic command class).

3rd association group – "Dimmer (1)" is used to change level of associated devices reflecting button operation for 1st channel (uses Switch Multilevel command class).

4th association group – "On/Off (2)" is used to turn the associated devices on/off reflecting button operation for 2nd channel (uses Basic command class).

5th association group – "Dimmer (2)" is used to change level of associated devices reflecting button operation for 2nd channel (uses Switch Multilevel command class).

The device allows to control 5 regular or multichannel devices per an association group, with the exception of “LifeLine” that is reserved solely for the controller and hence only 1 node can be assigned.

Assocation groups mapping

Root	Endpoint	Association group in endpoint
Association Group 2	Endpoint 1	Association Group 2
Association Group 3	Endpoint 1	Association Group 3
Association Group 4	Endpoint 2	Association Group 2
Association Group 5	Endpoint 2	Association Group 3

Single Switch Mode: commands sent to association groups for parameter 20 set to 1

	1 click	2 click	Hold	Release
Button 1 and 2 (toggle)	Basic Set: 2nd group, Multilevel Set: 3rd group	Basic Set: 2nd group, Multilevel Set: 3rd group	Multilevel Start Level Change: 3rd group	Multilevel Stop Level Change: 3rd group

Single Switch Mode: commands sent to association groups for parameter 20 set to 2

	1 click	2 click	Hold	Release
Button 1 (ON), Button 2 (OFF)	Basic Set: 2nd group, Multilevel Set: 3rd group	Basic Set: 2nd group, Multilevel Set: 3rd group	Multilevel Start Level Change: 3rd group	Multilevel Stop Level Change: 3rd group

Double Switch Mode: commands sent to association groups for parameter 20 set to 1

	1 click	2 click	Hold	Release
Button 1 and 2 (toggle)	Basic Set: 2nd and 4th group, Multilevel Set: 3rd and 5th group	Basic Set: 2nd and 4th group, Multilevel Set: 3rd and 5th group	Multilevel Start Lev-el Change: 3rd and 5th group	Multilevel Stop Lev-el Change: 3rd and 5th group

Double Switch Mode: commands sent to association groups for parameter 20 set to 2

	1 click	2 click	Hold	Release
Button 1 (ON), Button 2 (OFF)	Basic Set: 2nd and 4th group, Multilevel Set: 3rd and 5th group	Basic Set: 2nd and 4th group, Multilevel Set: 3rd and 5th group	Multilevel Start Change: 3rd and 5th group	Multilevel Stop Change: 3rd and 5th group

Double Switch Mode: commands sent to association groups for parameter 20 set to 3

	1 click	2 click	Hold	Release
Button 1 (toggle)	Basic Set: 2nd group, Multilevel Set: 3rd group	Basic Set: 2nd group, Multilevel Set: 3rd group	Multilevel Start Level Change: 3rd group	Multilevel Stop Level Change: 3rd group
Button 2 (toggle)	Basic Set: 4th group, Multilevel Set: 5th group	Basic Set: 4th group, Multilevel Set: 5th group	Multilevel Start Level Change: 5th group	Multilevel Stop Level Change: 5th group

Double Switch Mode: commands sent to association groups for parameter 20 set to 4

	1 click	2 click	Hold	Release
Button 1 (ON)	Basic Set: 2nd group, Multilevel Set: 3rd group	Basic Set: 4th group, Multilevel Set: 5th group	Multilevel Start Lev-el Change: 3rd and 5th group	Multilevel Stop Lev-el Change: 3rd and 5th group
Button 2 (OFF)	Basic Set: 2nd and 4th group, Multilevel Set: 3rd and 5th group	–	Multilevel Start Lev-el Change: 3rd and 5th group	Multilevel Stop Lev-el Change: 3rd and 5th group

9.2: Advanced parameters

The device allows to customize its operation to user's needs using configurable parameters.

The settings can be adjusted via Z-Wave controller to which the device is added. The way of adjusting them might differ depending on the controller.

In the FIBARO interface parameters are presented as simple options in Advanced Settings of the device.

Available parameters:

1.	**Remember device state**
Description	This parameter determines how the device will react in the event of power supply failure (e.g. power outage). The parameter is not relevant for outputs set to pulse mode (parameter 150/151 set to 2).
Parameter size	1B
Default value	1 (restores the state)
Available values	0 – remains switched off after restoring power 1 – restores remembered state after restoring power
2.	**First channel – overload safety switch**
Description	This function allows to turn off the controlled device in case of exceeding the defined power. Controlled device can be turned back on via button or sending a control frame.
Parameter size	4B
Single Switch Mode	
Default value	0 (disabled)
Available values	0 – function disabled 10-45000 (1.0-4500.0W, step 0.1W) – power threshold
Double Switch Mode	
Default value	0 (disabled)
Available values	0 – function disabled 10-36200 (1.0-3620.0W, step 0.1W) – power threshold

3.	Second channel – overload safety switch
Only in Double Switch Mode	
Description	This function allows to turn off the controlled device in case of exceeding the defined power. Controlled device can be turned back on via button or sending a control frame.
Parameter size	4B
Default value	0 (disabled)
Available values	0 – function disabled 10-36200 (1.0-3620.0W, step 0.1W) – power threshold
10.	**LED frame – power limit**
Description	This parameter determines maximum active power. Exceeding it results in the LED frame flashing violet. Function is active only when parameter 11 is set to 8 or 9.
Parameter size	4B
Single Switch Mode	
Default value	36800 (3680W)
Available values	500-36800 (50.0-3680.0W, step 0.1W) – power threshold
Double Switch Mode	
Default value	30000 (3000W)
Available values	500-30000 (50.0-3000.0W, step 0.1W) – power threshold

11.	LED frame – colour when ON
Description	This parameter defines the LED colour when the device is ON. When set to 8 or 9, LED frame colour will change depending on he measured power and parameter 10. Other colours are set permanently and do not depend on power consumption.
Parameter size	1B
Default value	1 (white)
Available values	0 – LED disabled 1 – White 2 – Red 3 – Green 4 – Blue 5 – Yellow 6 – Cyan 7 – Magenta 8 – colour changes smoothly depending on measured power 9 – colour changes in steps depending on measured power
12.	**LED frame – colour when OFF**
Description	This parameter defines the LED colour when the device is OFF.
Parameter size	1B
Default value	0 (disabled)
Available values	0 – LED disabled 1 – White 2 – Red 3 – Green 4 – Blue 5 – Yellow 6 – Cyan 7 – Magenta

13.	LED frame – brightness
Description	This parameter allows to adjust the LED frame brightness.
Parameter size	1B
Default value	100 (100%)
Available values	0 – LED disabled 1-100 (1-100% brightness) 101 – brightness directly proportional to measured power 102 – brightness inversely proportional to measured power
20.	**Buttons operation**
Description	This parameter defines how device buttons should control the channels.
Parameter size	1B
Single Switch Mode	
Default value	1
Available values	1 – 1st and 2nd button toggle the load 2 – 1st button turns the load ON, 2nd button turns the load OFF
Double Switch Mode	
Default value	3
Available values	1 – 1st and 2nd button toggle both channels 2 – 1st button turns both channels ON, 2nd button turns both channels OFF 3 – 1st button toggles 1st channel, 2nd button toggles 2nd channel 4 – 1st button single click turns 1st channel ON, 1st button double click turns 2nd channel ON, 2nd button single click turns both channels OFF

24.	Buttons orientation
Description	This parameter allows reversing the operation of the buttons.
Parameter size	1B
Default value	0
Available values	0 – default (1st button controls 1st channel, 2nd button controls 2nd channel) 1 – reversed (1st button controls 2nd channel, 2nd button controls 1st channel)
25.	**Outputs orientation**
Only in Double Switch Mode	
Description	This parameter allows reversing the operation of Q1 and Q2 without changing the wiring (e.g. in case of invalid connection). Changing orientation turns both outputs off.
Parameter size	1B
Default value	0
Available values	0 – default (Q1 - 1st channel, Q2 - 2nd channel) 1 – reversed (Q1 - 2nd channel, Q2 - 1st channel)
30.	**Alarm configuration - 1st slot**
Description	This parameter determines to which alarm frames and how the device should react. The parameters consist of 4 bytes, three most significant bytes are set according to the official Z-Wave protocol specification.
Parameter size	4B
Default value	[0x00, 0x00, 0x00, 0x00] (disabled)
Available values	**1B** [MSB] – Notification Type **2B** – Notification Status **3B** – Event/State Parameters **4B** [LSB] – action:
	0x00 – no action, **0xX1** – turn ON, **0xX2** – turn OFF, **0xX3** – turn ON/OFF continuously, **0x0X** – no action on LED frame, **0x1X** – LED frame blinks red, **0x2X** – LED frame blinks green, **0x4X** – LED frame blinks blue, **0x8X** – disable LED frame, **0xFX** – LED frame LAPD signal (red-white-blue)

31.	Alarm configuration - 2nd slot
Description	This parameter determines to which alarm frames and how the device should react. The parameters consist of 4 bytes, three most significant bytes are set according to the official Z-Wave protocol specification.
Parameter size	4B
Default value	[0x05, 0xFF, 0x00, 0x00] (Water Alarm, any notification, no action)
Available values	**1B** [MSB] – Notification Type **2B** – Notification Status **3B** – Event/State Parameters **4B** [LSB] – action:
	0x00 – no action, **0xX1** – turn ON, **0xX2** – turn OFF, **0xX3** – turn ON/OFF continuously, **0x0X** – no action on LED frame, **0x1X** – LED frame blinks red, **0x2X** – LED frame blinks green, **0x4X** – LED frame blinks blue, **0x8X** – disable LED frame, **0xFX** – LED frame LAPD signal (red-white-blue)

32.	Alarm configuration - 3rd slot
Description	This parameter determines to which alarm frames and how the device should react. The parameters consist of 4 bytes, three most significant bytes are set according to the official Z-Wave protocol specification.
Parameter size	4B
Default value	[0x01, 0xFF, 0x00, 0x00] (Smoke Alarm, any notification, no action)
Available values	**1B** [MSB] – Notification Type **2B** – Notification Status **3B** – Event/State Parameters **4B** [LSB] – action:
	0x00 – no action, **0xX1** – turn ON, **0xX2** – turn OFF, **0xX3** – turn ON/OFF continuously, **0x0X** – no action on LED frame, **0x1X** – LED frame blinks red, **0x2X** – LED frame blinks green, **0x4X** – LED frame blinks blue, **0x8X** – disable LED frame, **0xFX** – LED frame LAPD signal (red-white-blue)

33.	Alarm configuration - 4th slot
Description	This parameter determines to which alarm frames and how the device should react. The parameters consist of 4 bytes, three most significant bytes are set according to the official Z-Wave protocol specification.
Parameter size	4B
Default value	[0x02, 0xFF, 0x00, 0x00] (CO Alarm, any notification, no action)
Available values	**1B** [MSB] – Notification Type **2B** – Notification Status **3B** – Event/State Parameters **4B** [LSB] – action:
	0x00 – no action, **0xX1** – turn ON, **0xX2** – turn OFF, **0xX3** – turn ON/OFF continuously, **0x0X** – no action on LED frame, **0x1X** – LED frame blinks red, **0x2X** – LED frame blinks green, **0x4X** – LED frame blinks blue, **0x8X** – disable LED frame, **0xFX** – LED frame LAPD signal (red-white-blue)

34.	Alarm configuration - 5th slot
Description	This parameter determines to which alarm frames and how the device should react. The parameters consist of 4 bytes, three most significant bytes are set according to the official Z-Wave protocol specification.
Parameter size	4B
Default value	[0x04, 0xFF, 0x00, 0x00] (Heat Alarm, any notification, no action)
Available values	**1B** [MSB] – Notification Type **2B** – Notification Status **3B** – Event/State Parameters **4B** [LSB] – action:
	0x00 – no action, **0xX1** – turn ON, **0xX2** – turn OFF, **0xX3** – turn ON/OFF continuously, **0x0X** – no action on LED frame, **0x1X** – LED frame blinks red, **0x2X** – LED frame blinks green, **0x4X** – LED frame blinks blue, **0x8X** – disable LED frame, **0xFX** – LED frame LAPD signal (red-white-blue)

35.	Alarm configuration – duration
Description	This parameter defines duration of alarm sequence. When time set in this parameter elapses, alarm is cancelled, LED frame and relay restore normal operation, but do not recover state from before the alarm.
Parameter size	2B
Default value	600 (10min)
Available values	0 – infinite 1-32400 (1s-9h, 1s step) – duration
40.	**First button – scenes sent**
Description	This parameter determines which actions result in sending scene IDs assigned to them. Values can be combined (e.g. 1+2=3 means that scenes for single and double click are sent). Enabling scenes for triple click disables entering the device in learn mode by triple clicking.
Parameter size	1B
Default value	0 (no scenes)
Available values	1 – Key pressed 1 time 2 – Key pressed 2 times 4 – Key pressed 3 times 8 – Key hold down and key released
41.	**Second button – scenes sent**
Description	This parameter determines which actions result in sending scene IDs assigned to them. Values can be combined (e.g. 1+2=3 means that scenes for single and double click are sent). Enabling scenes for triple click disables entering the device in learn mode by triple clicking.
Parameter size	1B
Default value	0 (no scenes)
Available values	1 – Key pressed 1 time 2 – Key pressed 2 times 4 – Key pressed 3 times 8 – Key hold down and key released

60.	Power reports – include self-consumption
Description	This parameter determines whether the power measurements for Endpoint 1 should include power consumed by the device itself.
Parameter size	1B
Default value	0 (not included)
Available values	0 – Self-consumption not included 1 – Self-consumption included
61.	**Power reports for first channel – on change**
Description	This parameter defines minimal change (from the last reported) in measured power that results in sending new report. For loads under 50W the parameter is irrelevant, report are sent every 5W change.
Parameter size	2B
Default value	15 (15%)
Available values	0 – reporting on change disabled 1-500 (1-500%, 1% step) – minimal change
62.	**Power reports for first channel – periodic**
Description	This parameter defines reporting interval for measured power. Periodic reports are independent from changes in value (parameter 61).
Parameter size	2B
Default value	3600 (1h)
Available values	0 – periodic reports disabled 30-32400 (30s-9h, 1s step) – time interval
63.	**Power reports for second channel – on change**
Only in Double Switch Mode	
Description	This parameter defines minimal change (from the last reported) in measured power that results in sending new report. For loads under 50W the parameter is irrelevant, report are sent every 5W change.
Parameter size	2B
Default value	15 (15%)
Available values	0 – reporting on change disabled 1-500 (1-500%, 1% step) – minimal change

64.	Power reports for second channel – periodic
Only in Double Switch Mode	
Description	This parameter defines reporting interval for measured power. Periodic reports are independent from changes in value (parameter 63).
Parameter size	2B
Default value	3600 (1h)
Available values	0 – periodic reports disabled 30-32400 (30s-9h, 1s step) – time interval
65.	**Energy reports for first channel – on change**
Description	This parameter defines minimal change (from the last reported) in measured energy that results in sending new report.
Parameter size	2B
Default value	10 (0.1kWh)
Available values	0 – reporting on change disabled 1-500 (0.01-5kWh, 0.01kWh step) – minimal change
66.	**Energy reports for first channel – periodic**
Description	This parameter defines reporting interval for measured energy. Periodic reports are independent from changes in value (parameter 65).
Parameter size	2B
Default value	3600 (1h)
Available values	0 – periodic reports disabled 30-32400 (30s-9h, 1s step) – time interval
67.	**Energy reports for second channel – on change**
Only in Double Switch Mode	
Description	This parameter defines minimal change (from the last reported) in measured energy that results in sending new report.
Parameter size	2B
Default value	10 (0.1kWh)
Available values	0 – reporting on change disabled 1-500 (0.01-5kWh, 0.01kWh step) – minimal change

68.	Energy reports for second channel – periodic
Only in Double Switch Mode	
Description	This parameter defines reporting interval for measured energy. Periodic reports are independent from changes in value (parameter 67).
Parameter size	2B
Default value	3600 (1h)
Available values	0 – periodic reports disabled 30-32400 (30s-9h, 1s step) – time interval
150.	**First channel – operating mode**
Description	This parameter allows to choose operating for the 1st channel .
Parameter size	1B
Default value	0
Available values	0 – standard operation 1 – delayed OFF 2 – single pulse
151.	**Second channel – operating mode**
Only in Double Switch Mode	
Description	This parameter allows to choose operating for the 2nd channel.
Parameter size	1B
Default value	0
Available values	0 – standard operation 1 – delayed OFF 2 – single pulse

152.	First channel - reaction to switch for delayed OFF / pulse modes
Description	This parameter determines how the device in timed mode reacts to pushing the button for 1st channel. The parameter is relevant only for button toggles modes (parameter 20 set to 1 or 3).
Parameter size	1B
Default value	0
Available values	0 – cancel mode and set default state 1 – no reaction - mode runs until it ends 2 – reset timer - start counting from the beginning
153.	**Second channel - reaction to switch for delayed OFF / pulse modes**
Only in Double Switch Mode	
Description	This parameter determines how the device in timed mode reacts to pushing the button for 2nd channel. The parameter is relevant only for button toggles modes (parameter 20 set to 1 or 3).
Parameter size	1B
Default value	0
Available values	0 – cancel mode and set default state 1 – no reaction - mode runs until it ends 2 – reset timer - start counting from the beginning
154.	**First channel - time parameter for delayed OFF / pulse modes**
Description	This parameter allows to set time parameter used in timed modes for 1st channel (parameter 150). Delay time for switching off or duration of the pulse.
Parameter size	2B
Default value	50 (50s)
Available values	0 – 0.1 second 1-32000 (1-32000s, 1s step) – time parameter

155.	Second channel - time parameter for delayed OFF / pulse modes
Only in Double Switch Mode	
Description	This parameter allows to set time parameter used in timed modes for 2nd channel (parameter 151). Delay time for switching off or duration of the pulse.
Parameter size	2B
Default value	50 (50s)
Available values	0 – 0.1 second 1-32000 (1-32000s, 1s step) – time parameter
156.	First channel – Switch ON value sent to 2nd and 3rd association groups
Description	This parameter defines value sent with Switch ON command to devices associated in 2nd and 3rd association group for manual changes of Endpoint 1 state.
Parameter size	2B
Default value	255
Available values	0-99 or 255
157.	First channel – Switch OFF value sent to 2nd and 3rd association groups
Description	This parameter defines value sent with Switch OFF command to devices associated in 2nd and 3rd association group for manual changes of Endpoint 1 state.
Parameter size	2B
Default value	0
Available values	0-99 or 255

158.	First channel – Double Click value sent to 2nd and 3rd association groups
Description	This parameter defines value sent with Double Click command to devices associated in 2nd and 3rd association group for manual changes of Endpoint 1 state.
Parameter size	2B
Default value	99
Available values	0-99 or 255
159.	Second channel – Switch ON value sent to 4th and 5th association groups
Only in Double Switch Mode	
Description	This parameter defines value sent with Switch ON command to devices associated in 4th and 5th association group for manual changes of Endpoint 2 state.
Parameter size	2B
Default value	255
Available values	0-99 or 255
160.	Second channel – Switch OFF value sent to 4th and 5th association groups
Only in Double Switch Mode	
Description	This parameter defines value sent with Switch OFF command to devices associated in 4th and 5th association group for manual changes of Endpoint 2 state.
Parameter size	2B
Default value	0
Available values	0-99 or 255

161.	Second channel – Double Click value sent to 4th and 5th association groups
Only in Double Switch Mode	
Description	This parameter defines value sent with Double Click command to devices associated in 4th and 5th association group for manual changes of Endpoint 2 state.
Parameter size	2B
Default value	99
Available values	0-99 or 255

10: Z-Wave specification

Endpoint 1:

Generic Device Class: GENERIC_TYPE_SWITCH_BINARY

Specific Device Class: SPECIFIC_TYPE_POWER_SWITCH_BINARY

Description: switch 1

Endpoint 2:

Generic Device Class: GENERIC_TYPE_SWITCH_BINARY

Specific Device Class: SPECIFIC_TYPE_POWER_SWITCH_BINARY

Description: switch 2

Supported Command Classes

Command Class	Version	Secure
COMMAND_CLASS_ZWAVEPLUS_INFO [0x5E]	V2	
COMMAND_CLASS_SWITCH_BINARY [0x25]	V1	YES
COMMAND_CLASS_ASSOCIATION [0x85]	V2	YES
COMMAND_CLASS_MULTI_CHANNEL_ASSOCIA-TION [0x8E]	V3	YES
COMMAND_CLASS_ASSOCIATION_GRP_INFO [0x59]	V2	YES
COMMAND_CLASS_TRANSPORT_SERVICE [0x55]	V2	
COMMAND_CLASS_VERSION [0x86]	V2	YES
COMMAND_CLASS_MANUFACTURER_SPECIFIC [0x72]	V2	YES
COMMAND_CLASS_DEVICE_RESET_LOCALLY [0x5A]	V1	YES
COMMAND_CLASS_POWERLEVEL [0x73]	V1	YES
COMMAND_CLASS_SECURITY [0x98]	V1	
COMMAND_CLASS_SECURITY_2 [0x9F]	V1	
COMMAND_CLASS_SUPERVISION [0x6C]	V1	
COMMAND_CLASS_METER [0x32]	V3	YES
COMMAND_CLASS_CONFIGURATION [0x70]	V1	YES
COMMAND_CLASS_CRC_16_ENCAP [0x56]	V1	
COMMAND_CLASS_NOTIFICATION [0x71]	V8	YES
COMMAND_CLASS_PROTECTION [0x75]	V2	YES
COMMAND_CLASS_MULTI_CHANNEL [0x60]*	V4	YES
COMMAND_CLASS_CENTRAL_SCENE [0x5B]	V3	YES

COMMAND_CLASS_FIRMWARE_UPDATE_MD [0x7A]	V4	YES
COMMAND_CLASS_APPLICATION_STATUS [0x22]	V1	
COMMAND_CLASS_BASIC [0x20]	V1	YES

Multichannel Command Class*

Command Class	Version	Secure
Endpoint 1		
COMMAND_CLASS_ZWAVEPLUS_INFO [0x5E]	V2	
COMMAND_CLASS_SWITCH_BINARY [0x25]	V1	YES
COMMAND_CLASS_ASSOCIATION [0x85]	V2	YES
COMMAND_CLASS_MULTI_CHANNEL_ASSOCIA-TION [0x8E]	V3	YES
COMMAND_CLASS_ASSOCIATION_GRP_INFO [0x59]	V2	YES
COMMAND_CLASS_SECURITY [0x98]	V1	
COMMAND_CLASS_SECURITY_2 [0x9F]	V1	
COMMAND_CLASS_SUPERVISION [0x6C]	V1	
COMMAND_CLASS_METER [0x32]	V3	YES
COMMAND_CLASS_NOTIFICATION [0x71]	V8	YES
COMMAND_CLASS_PROTECTION [0x75]	V2	YES
COMMAND_CLASS_APPLICATION_STATUS [0x22]	V1	
Endpoint 2		
COMMAND_CLASS_ZWAVEPLUS_INFO [0x5E]	V2	
COMMAND_CLASS_SWITCH_BINARY [0x25]	V1	YES
COMMAND_CLASS_ASSOCIATION [0x85]	V2	YES
COMMAND_CLASS_MULTI_CHANNEL_ASSOCIA-TION [0x8E]	V3	YES
COMMAND_CLASS_ASSOCIATION_GRP_INFO [0x59]	V2	YES
COMMAND_CLASS_SECURITY [0x98]	V1	
COMMAND_CLASS_SECURITY_2 [0x9F]	V1	
COMMAND_CLASS_SUPERVISION [0x6C]	V1	
COMMAND_CLASS_METER [0x32]	V3	YES
COMMAND_CLASS_NOTIFICATION [0x71]	V8	YES
COMMAND_CLASS_PROTECTION [0x75]	V2	YES
COMMAND_CLASS_APPLICATION_STATUS [0x22]	V1	

Notification Command Class

The device uses Notification Command Class to report different events to the controller ("Lifeline" group).

Notification Type	Event	Parameter	Status	In endpoints
Power Management [0x08]	Over-current detected [0x06/V3]		0xFF – enable (non-changeable)	Root, Endpoint 1*, Endpoint 2*
Power Management [0x08]	Over-load detected [0x08]		0xFF – enable (non-changeable)	Root, Endpoint 1*, Endpoint 2*
System [0x09]	System hardware failure with manufacturer proprietary failure code [0x03]	MP code: 0x01 [device overheat]	0xFF – enable (non-changeable)	Root, Endpoint 1*

Protection CC

Protection Command Class allows to prevent local or remote control of the outputs.

Type	State	Description	Hint
Local	0	Unprotected - The device is not protected, and may be operated normally via the user interface.	Inputs connected with outputs.
Local	2	No operation possible – button can not change relay state, any other functionality is available (menu).	Inputs disconnected from outputs.
RF	0	Unprotected - The device accept and respond to all RF Commands.	Outputs can be controlled via Z-Wave.
RF	1	No RF control – command class basic and switch binary are rejected, every other command class will be handled.	Outputs cannot be controlled via Z-Wave.

Meter CC

Meter Type	Scale	Rate Type	Precision	Size
Electric [0x01]	Electric_kWh [0x00] (default)	Import [0x01]	2	4
Electric [0x01]	Electric_W [0x02]	Import [0x01]	1	2

* only in Double Switch Mode

11: Parts compatibility

Available FIBARO parts		Included in FGWDSEU-221
Name	Symbol	
Walli Double Switch Unit	FG-WDSEU221-AS-8001	x
Switch Button with Lightguide	FG-WDSEU221-AS-8100	x
Switch Button Adapter	FG-WDSEU221-PP-0007	
Mounting Frame FIBARO/ GIRA	FG-Wx-AS-4001	x
Mounting Frame Legrand	FG-Wx-AS-4002	
Mounting Frame Schneider	FG-Wx-AS-4003	
Single Cover Plate	FG-Wx-PP-0001	x
Double Cover Plate	FG-Wx-PP-0003	
Triple Cover Plate	FG-Wx-PP-0004	

Parts required for GIRA System 55 (only with non-metalised outer surface: Standard 55, E2, Event, Event Clear) cover plates

Required FIBARO parts	
Name	Symbol
Walli Double Switch Unit	FG-WDSEU221-AS-8001
Switch Button Adapter	FG-WDSEU221-PP-0007
Mounting Frame FIBARO/GIRA	FG-Wx-AS-4001

Parts required for Legrand Céliane cover plates

Required FIBARO parts	
Name	Symbol
Walli Double Switch Unit	FG-WDSEU221-AS-8001
Switch Button Adapter	FG-WDSEU221-PP-0007
Mounting Frame Legrand	FG-Wx-AS-4002

Parts required for Schneider Odace cover plates

Required FIBARO parts	
Name	Symbol
Walli Double Switch Unit	FG-WDSEU221-AS-8001
Mounting Frame Schneider	FG-Wx-AS-4003

12: Regulations

Legal Notices

All information, including, but not limited to, information regarding the features, functionality, and/or other product specification are subject to change without notice. Fibaro reserves all rights to revise or update its products, software, or documentation without any obligation to notify any individual or entity.

FIBARO and Fibar Group logo are trademarks of Fibar Group S.A. All other brands and product names referred to herein are trademarks of their respective holders.

Declaration of conformity

Hereby, Fibar Group S.A. declares that the device is in compliance with the essential requirements and other relevant provisions of Directive 2014/53/EU. The full text of the EU declaration of conformity is available at the following internet address: www.manuals.fibaro.com

WEEE Directive Compliance

Device labelled with this symbol should not be disposed with other household wastes. It shall be handed over to the applicable collection point for the recycling of waste electrical and electronic equipment.