vivint.SmartHome®

ELEMENT™ THERMOSTAT

USER GUIDE

Z-WAVE PLUS

Welcome

The Vivint Element™ Thermostat is a smart wireless thermostat that combines comfort and savings while blending seamlessly with your home interior,

With it's built-in smart assistant, it automates comfort and energy savings to keep your home temperature exactly where you want it. Climate controls, including temperature and humidity tracking, can be monitored and adjusted anywhere with the Vivint Smart Home app. When you're at home you can just ask Alexa to adjust the temperature for hands-free control.

Now you can start the air conditioning on your way home, or keep your home office toasty during a blizzard-all from the same mobile app that controls your locks, cameras, and garage door.

Table of Contents

Getting Started 3
Unit View 5
Installation Location 6

Wiring 7
Mounting Plate 9
Prepare Wires 10
Connecting Wires 11
Power Supply 12

Wiring Diagrams 26
Detailed Wire Diagram 27
Step By Step Wiring Diagrams 28
Wire Reference Table 32

Setup 14
Connecting to a Z-Wave network 15
Set up HVAC - Humidity 16
Set up HVAC - Heating 17
Set up HVAC - Warming 18
Z-Wave and Thermostat Programs 19
Select HVAC & Heat Types 19
Navigating Screens 20
Test Installation 23

Getting Started

Tools Needed

Small Phillips screwdriver

Level

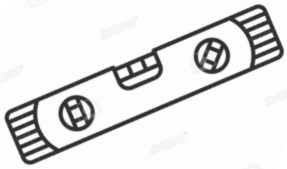

CAUTION

To avoid electrical shock and to prevent damage to the furnace and thermostat, disconnect the power supply before installing or servicing the thermostat or any part of the HVAC system. This can be done at the circuit breaker labeled either furnace or air handler.

- Do not turn power back on until work is complete.
- Do not short (jumper) across electric terminals at the control on the furnace or air conditioner to test the system. This can damage the thermostat.
- Your thermostat is a precise instrument. Handle it with care.
- All wiring must conform to local codes and ordinances.
- This thermostat is designed for use with 4AA alkaline batteries and/or 24-volt AC C wire (or a 12- 24 AC or DC source) or millivolt gas systems. Each thermostat relay load should be limited to 1.0 amp; higher amperage can cause damage to the thermostat.

Unit Front

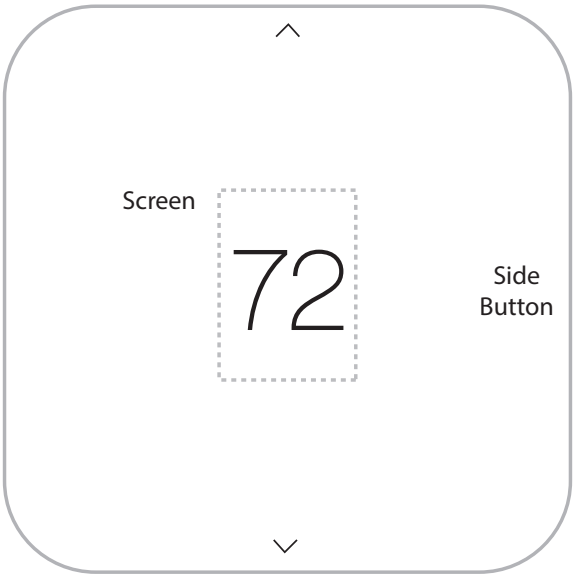

Mounting Plate and Wire Terminals

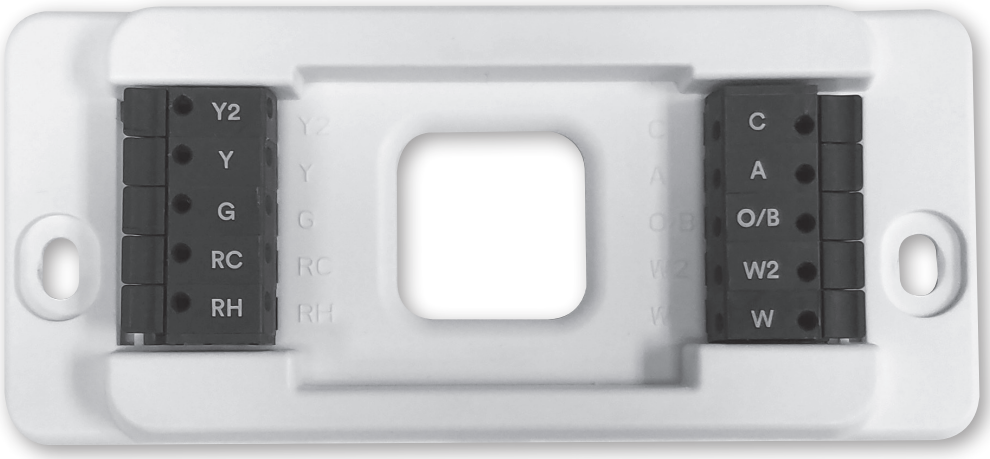

Installation Location

To avoid having to move your wiring to a new location, mount the thermostat in place of the old thermostat.

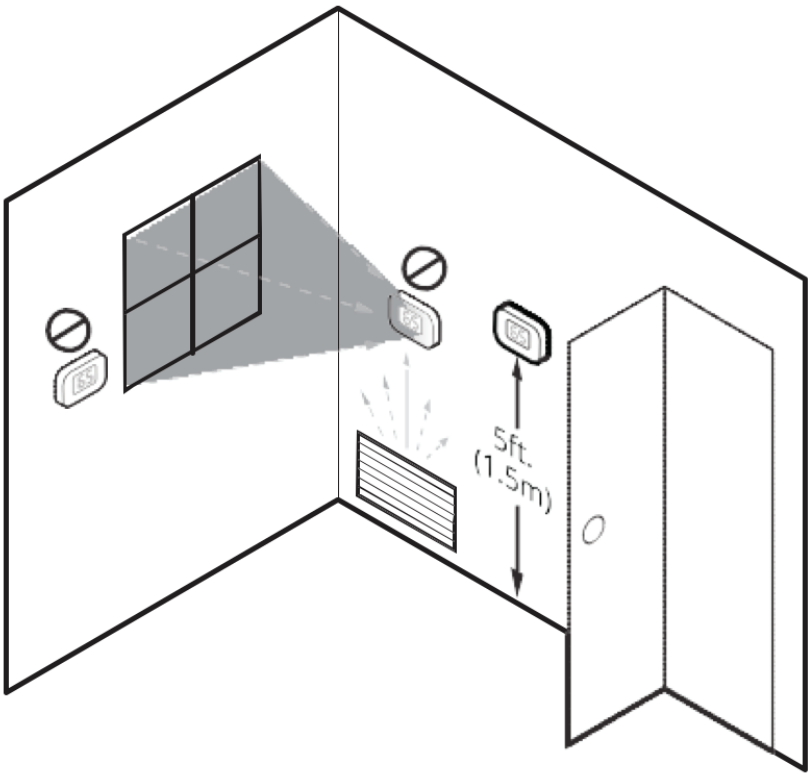

- Install the thermostat on an inside wall of an often-used room, about 5 ft. (1.5m) above the floor.
- Do not install where there are unusual heating conditions, such as: in direct sunlight;near a lamp, radio, television, radiator register, fireplace; near hot water pipes in the wall; or near a stove on the other side of a wall.
- Do not locate in unusual cooling conditions, such as: on a wall separating an unheated room; or in a draft from a stairwell, door, or window .
- Do not locate in a damp area. This can lead to corrosion that will shorten the thermo- stat's life .
- Do not locate where air circulation is poor, such as: a corner, an alcove, or behind an open door.
- Ensure that the thermostat is level on the wall.

Wiring

CAUTION

- Read instructions carefully before removing any wiring from an existing thermostat.
- Label all wires before disconnecting them form the existing thermostat.
- Test existing thermostat before turning off HVAC power to ensure HVAC system is working appropriately

1. Turn off power to the furnace or air handler (i.e. heating and cooling systems). This can be done at the circuit breaker.
2. Remove the cover from the existing thermostat. Check for locking screws on the side or front that must be loosened first.
3. Attach provided labels to each wire for identification. Refer to the lettered terminal where the wires attach; do not use the color of the wires.
4. Disconnect wires from the existing thermostat, and wind them around a pencil to keep them from falling back inside the wall.
5. Loosen all mounting screws on the old thermostat and remove from the wall.

Step 4 Diagram

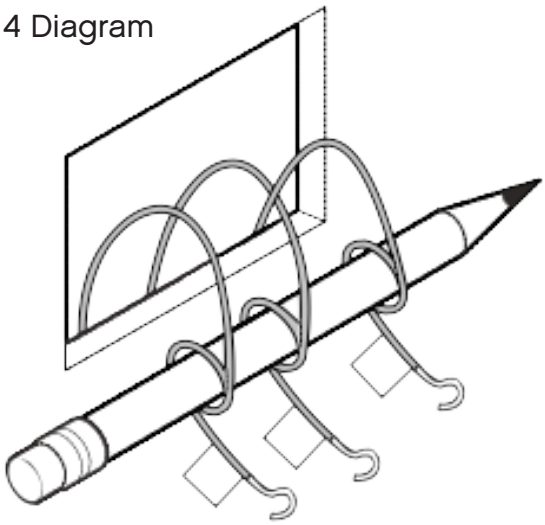

Attaching the Mounting Plate to the Wall

1. Carefully pull the labeled wires through the center hole in the mounting plate.
2. Position thermostat for best appearance to cover the hole in the wall.
3. Mark first and drill a ¼ in. (6mm) hole at each screw location.
4. If you are mounting the Thermostat to sheet rock or if you are using the old mounting holes, use the plastic anchors provided.
5. Attach the Thermostat to the wall with the screws provided.

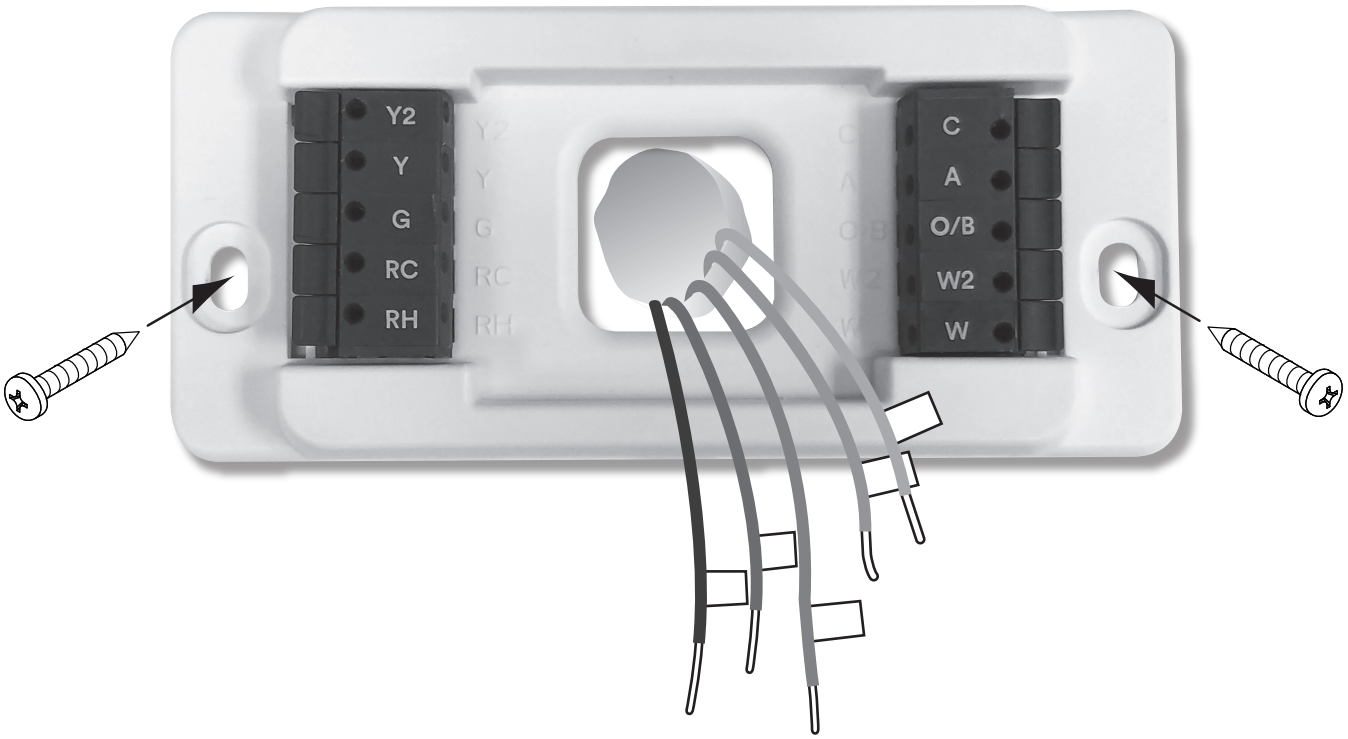

Prepare Wires

Make sure your wires are labeled. If necessary, find the “other end” connection for each wire on your furnace or air handler (i.e.heating or air conditioning) equipment and note the label there.

1. Fan out wires so that they are aligned with the terminals.
2. Do not bunch wires in front of the mounting plate. Feed any slack back into the wall.

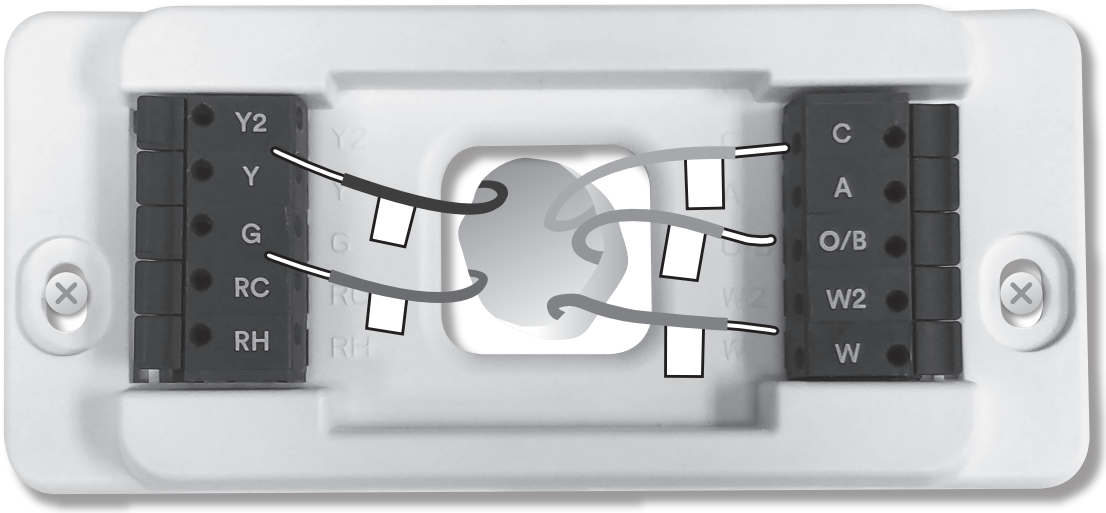

If dual transformer (RH & RC wires), remove jumper. If single transformer leave jumper on.

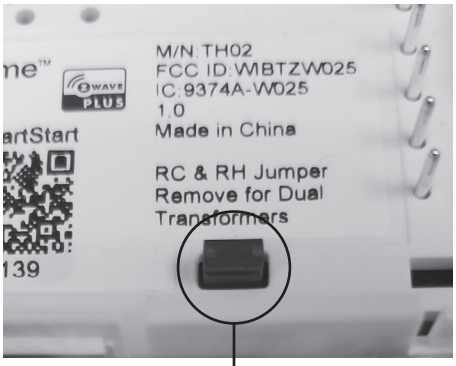

Jumper

Do not allow wires to touch each other or other parts on the thermostat.

Follow these guidelines for safe and secure wire connections:

- Use at least 2.5 inches of wire for each of your connections to the Thermostat.
- If you do not have enough wire, splice additional wire to allow enough slack.
- Terminals accept wires from 16-22 AWG.
- Remove 1/8 inch insulation from the tip of each wire.
- Take care not to damage the labels for each wire.

Testing the Installation

Connecting Your Wires

Reference the Detailed Wire Diagrams on page 26 to identify your wiring diagram and set-up information. If necessary, contact customer support for help.

1. Connect a labeled wire only to a matching lettered terminal.
2. Insert the terminal labeled wire with corresponding terminal. (e.g. G wire goes to G terminal).
3. Make sure to insert the wire into the terminal as far as it will go. The wire should be secure and cannot be removed easily.

Powering the Thermostat

The Thermostat can be powered from 24VAC or by four AA alkaline batteries.

24VAC Powered Installation

The thermostat can be powered from the HVAC system's 24VAC transformer. This requires both the "R" and "C" wire to be connected to the thermostat. This is the preferred power option.

The 24VAC "C" wire is the other side of the HVAC system's transformer and can be found where the other thermostat wires connect at the wall or at the HVAC system. It is commonly a blue wire. Do not use the common or ground side of the line voltage.

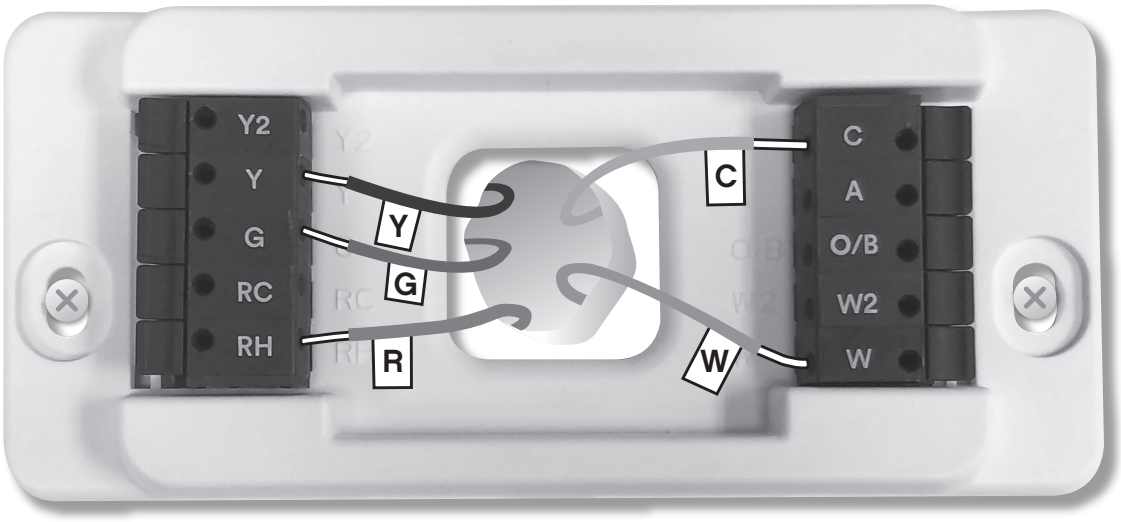

Battery Powered Installation

Install four (4) AA alkaline batteries following the marked polarity in the battery compartments. Insert the battery negative end first against the spring, then push the positive end in.

Installing batteries

Reconnecting Power to HVAC System

With all the wires connected and the unit attached to the wall, it is time to turn the furnace and/or air handler power back on. Reconnect the power at the breaker you used to switch it off. The Thermostat will power-up in the Setup mode.

Your Thermostat is not yet configured to operate your HVAC system. You must now connect your thermostat to a Z-Wave Network and configure the HVAC and Heat Source settings.

Proceed to Setup Section

THERMOSTAT BATTERY CAUTIONS

- Always use new Alkaline batteries.
- Do not use rechargeable batteries of any type. They will not operate the thermostat properly and may lead to damage.
- Do not mix old and new batteries.
- Do not mix battery types, for example Lithium with Alkaline.
- Do not dispose of batteries in fire. Batteries may explode or leak.
- If you are leaving your home for a month or more, you should replace the batteries as a precaution against battery failure in your absence.
- Always replace the batteries as soon as the “Low Batt” warning flashes. The thermostat is a battery-powered device; you should replace the batteries before they run out.
- Always replace the batteries once a year, even if the “Low Batt” indicator does not flash. Replacing the batteries also helps to prevent leakage that can corrode and damage the thermostat.
- Failing to replace the batteries when necessary could cause the thermostat to lose power or malfunction. If the thermostat loses power, then the thermostat will not control the temperature, which could result in your HVAC system not functioning as you intended and lead to possible damage from excessive heating or cooling.
  - If the thermostat batteries fail with the heat OFF, this can result in NO HEAT and possible frozen or broken pipes and water damage.
  - If the thermostat batteries fail with the cool OFF, this can result in NO COOL and could cause possible damage or excessive temperatures.

Wiring Diagrams

Detailed Wiring Diagrams

Diagram 1

3 Wire Heat
C W R

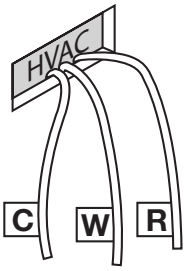

Diagram 2

4 Wire Heat
C W R G

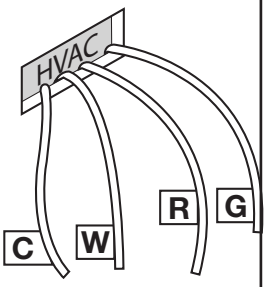

Diagram 3

5 Wire Heat/Cool
C W Y R G

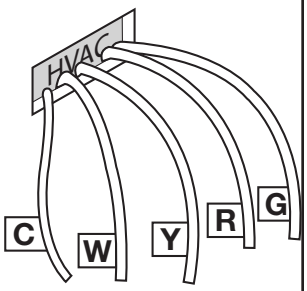

Diagram 4

6 Wire Heat/Cool
C W Y RH RC G

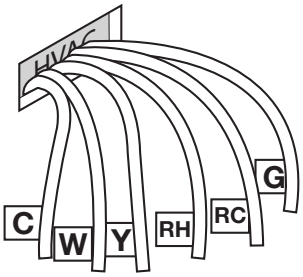

Diagram 5

Two-stage Cool
Two-stage Heat
C W1 Y1 R G W2 Y2

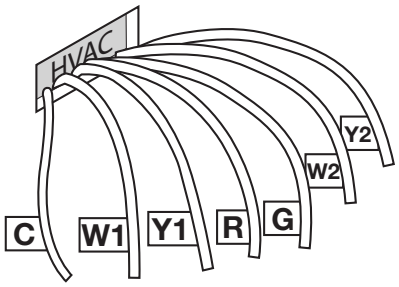

Diagram 6

5 Wire Heat Pump
w/o Aux Heat
C B or **O Y R G**

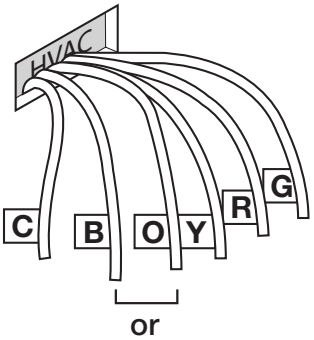

Diagram 7

Two-stage Heat Pump
w/Two-stage Aux Heat
C B or **O Y1 Y2 W1 W2 R G**

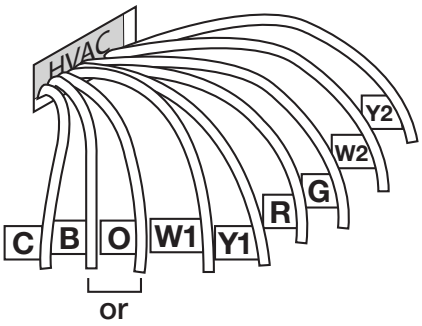

Step-By-Step Wiring Diagrams

DIAGRAM 1

2 Wire GAS MILLIVOLT or 24VAC System

1. Connect the R (or RH) wire to the RH terminal. This connects the heat power.
2. Connect the W wire to the W terminal. This connects the heat.
3. If available, connect the C wire to the C terminal.
4. Go to “Connect Your Wires” on page 11.

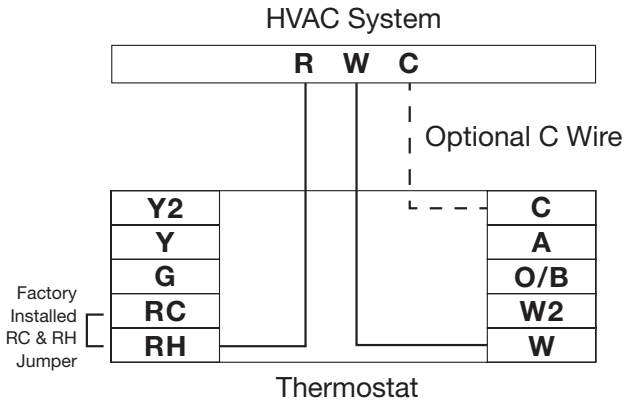

DIAGRAM 2

3 Wire Heat

1. Connect the R (or RH) wire to the RH terminal. This connects the heat power.
2. Connect the W wire to the W terminal. This connects the heat.
3. Connect the G wire to the G terminal. This connects the fan.
4. If available, connect the C wire to the C terminal.
5. Go to “Connect Your Wires” on page 11.

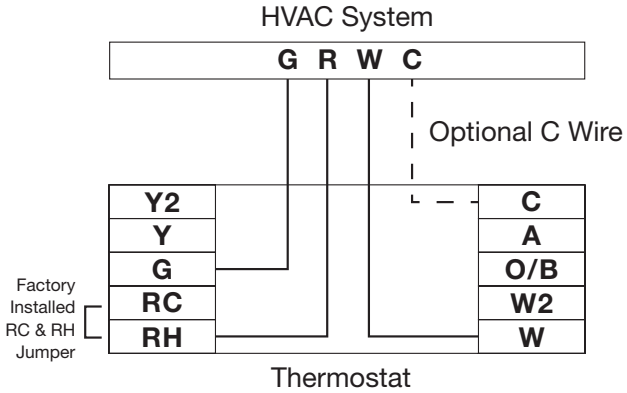

DIAGRAM 3

4 Wire Heat/Cool

1. Connect the W wire to the W terminal. This connects the heat.
2. Connect the Y wire to the Y terminal. This connects the cooling compressor.
3. Connect the RH or R wire to the RH terminal. This connects the power.
4. Connect the G wire to the G terminal. This connects the fan.
5. If available, connect the C wire to the C terminal.
6. Go to “Connect Your Wires” on page 11.

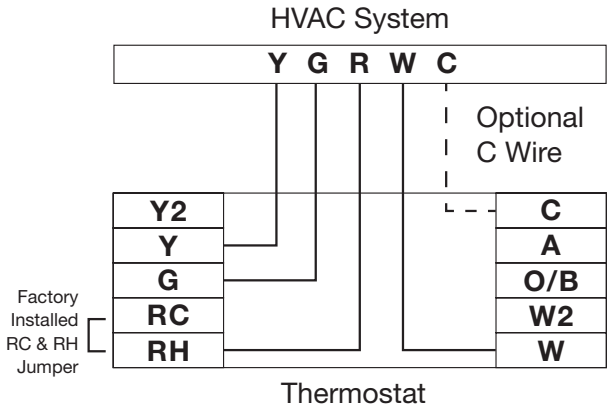

DIAGRAM 4

5 Wire Heat/Cool with separate Heating (RH) and Cooling (RC) Transformers

1. Connect the W wire to the W terminal. This connects the heat.
2. Connect the Y wire to the Y terminal. This connects to the cooling compressor.
3. Remove the RC & RH Jumper.
4. Connect the RH wire to the RH terminal and the RC wire to the RC terminal. This connects power.
5. Connect the G wire to the G terminal. This connects the fan.
6. If available, connect the C wire to the C terminal.
7. Go to “Connect Your Wires” on page 11.

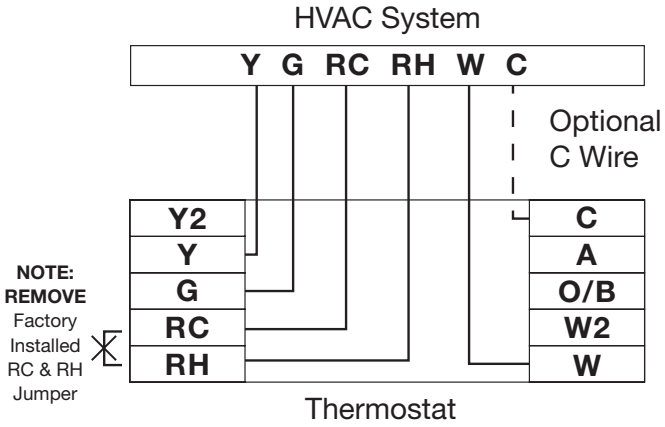

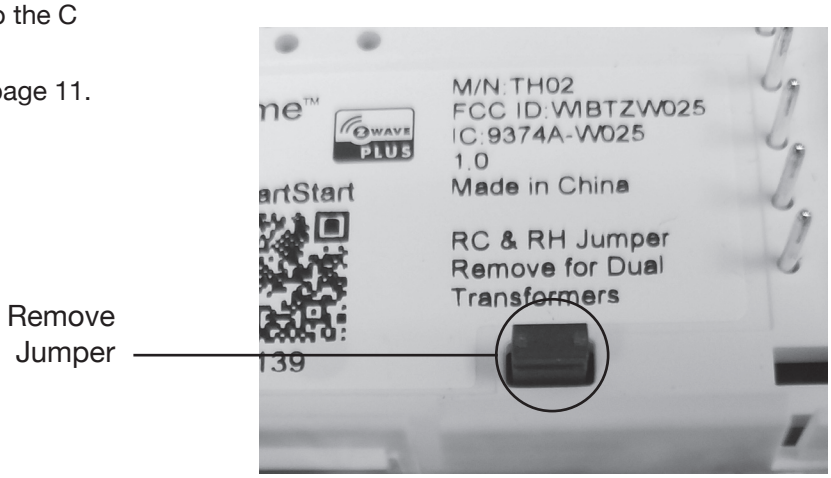

DIAGRAM 5

Two-stage Heat & Two-Stage Cool

The Element can handle up to 2 stages of HEAT and 2 stages of COOL.

1. Connect the W and W2 wires to the W and W2 terminals. This connects the stages of HEAT.
2. Connect the Y and Y2 wires to the Y and Y2 terminals. This connects the stages of COOL.
3. Connect the RH or R wire to the RH terminal. This connects the power.
4. Connect the G wire to the G terminal. This connects the fan.
5. If available, connect the C wire to the C terminal.
6. Go to “Connect Your Wires” on page 11.

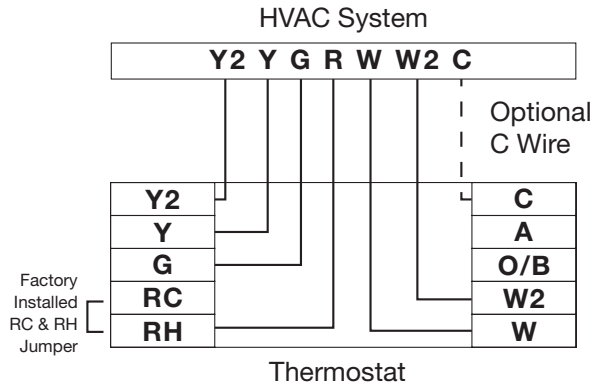

DIAGRAM 6

4 Wire Heat Pump (heat/cool) without Auxiliary Heat

1. Connect the O wire to the O terminal or the B wire to the B terminal. This connects the change-over valve. If you have both O and B, connect only the O wire to the O terminal and DO NOT connect B to B terminal (see the Wire Reference Table on page 23 for Trane terminal labels).
2. Connect the Y wire to the Y terminal. This connects the compressor.
3. Connect the R wire to the RH terminal. This connects the power.
4 . Connect the G wire to the G terminal. This connects the fan.
5. If available, connect the C wire to the C terminal.
6. Go to “Connect Your Wires” on page 11.

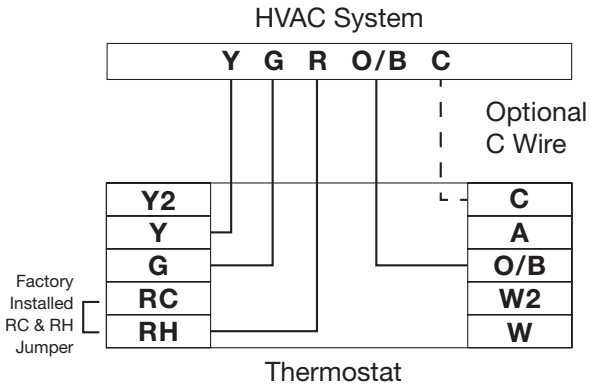

DIAGRAM 7

Two-stage Heat Pump with Two-Stage Aux Heat

The Element can handle up to 2 stages of Pump compression and 2 stages of AUX heat.

1. Connect O wire to the O terminal or the B wire to the B terminal. This connects the change-over valve. If you have both O and B, connect only the O wire to the O terminal and DO NOT connect B to B terminal (see Wire Reference Table on page X for Trane terminal labels.).
2. Connect the AUX 1 and AUX 2 wires to the W and W2 terminals. This connects the auxiliary heat.
3. Connect the Y and Y2 wires to the Y and Y2 terminals. This connects the compressor.
4. Connect the R wire to RH terminal. This connects the power.
5. Connect the G wire to the G terminal. This connects the fan.
6. If available, connect the C wire to the C terminal.
7. Go to “Connect Your Wires” on page 11.

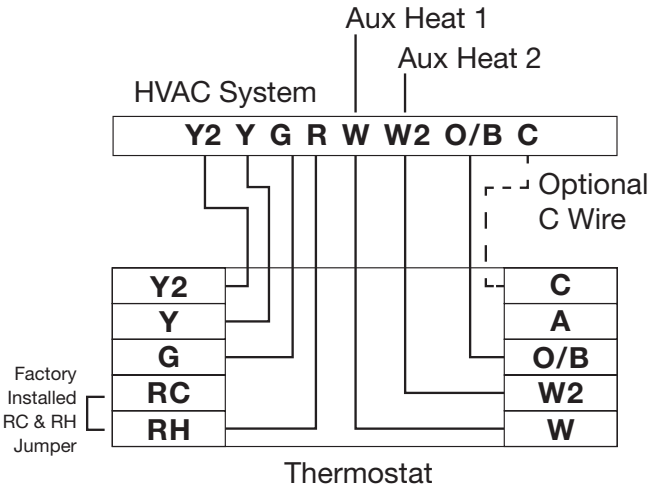

DIAGRAM 8
Humidity/Dehumidity

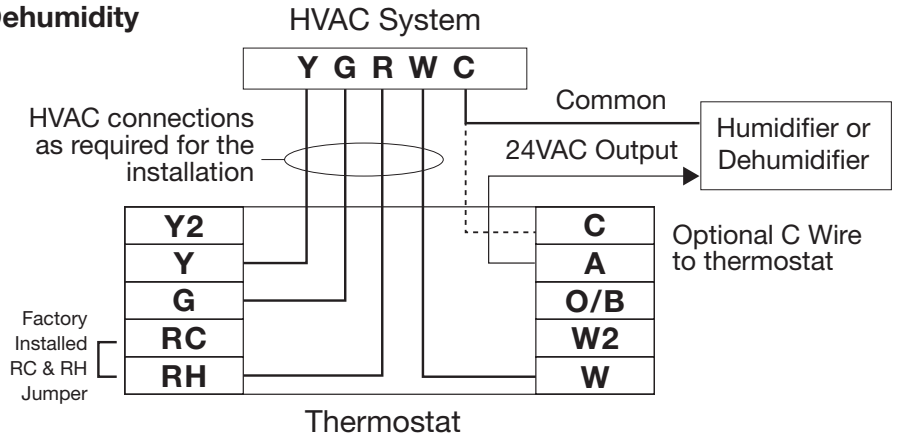

The EV2 provides a 24VAC output on the A terminal when the Humidity function is enabled and a call to humidify/dehumidify is active. Check the units control input, an external relay may be necessary.

Wiring Reference Table

Possible Wires	What They Control	Element Terminal
R or V or VR	RH and RC Single power for HEAT and COOL	RH
RH or 4	RH Power for HEAT (RH not connected to RC jumper clip removed)	RH
RC	RC Power for COOL (RH not connected to RC jumper clip removed)	RC
W	W 1st stage HEAT or 1st stage auxiliary heat	W
W2	W2 2nd stage HEAT or 2nd stage auxiliary heat	W2
W3	W3 3rd stage HEATING	A
Y	Y COOL control or 1st stage compression for heat pump	Y
Y2	Y2 2nd stage COOL control or 2nd stage compression for a heat pump	Y2
G or F	G FAN control	G
C or X	C 24VAC power (to power thermostat) NOTE: TRANE uses B for this connection	C
H	H External Humidifier	A
DH	DH External De-Humidifier	A
B	B Heat pump changeover (cool to heat, powered in heat) For more details see B/O	O/B
O	O Heat pump changeover (heat to cool, powered in cool) For more details see B/O	O/B
B/O	IMPORTANT: If there are both B and O wires (Trane and American Standard heat pump products) DO NOT CONNECT B to B terminal. Instead, connect B to C terminal. If not a Trane or American Standard product, tape off B.	O/B
E	n/a Emergency heat (do not connect, tape off)	
L	n/a System monitor (do not connect, tape off)	
T	n/a Outdoor sensor (do not connect, tape off)	

Old Lennox Systems		Element Terminal
V or VR or R	RH Power for HEAT	RH
Y	Y COOL control	Y
Y or W or W2	W2 2nd stage HEAT	W2
F or G	G Fan control	G
R or O	O	O/B
X or X2 or C	C	C
Trane Products [American Standard]		
B	C 24VAC power (to power thermostat)	C
X2	Emergency heat. Do not connect, tape off.	NA
Radiant/Border Heating Systems (2 wire)		
R	RH	RH
W	W	W

Setup

Setup

The initial setup will take you through the following steps:

1. Connecting to the panel
2. Setting up humidity
3. Setting up heating
4. Setting up cooling
5. Selecting heat or cool mode

The following pages describe in detail this setup process.

Connecting the Thermostat to the Panel (Classic Inclusion)

The Vivint Element Thermostat is a Z-Wave® compliant thermostat. It can be operated in any Z-Wave network with other Z-Wave certified devices from other manufacturers. All main operated nodes within the network will act as repeaters regardless of vendor to increase reliability of the network if not battery operated.

Below describes how to add to the Vivint panel.

1. Set your panel to add node mode to add the thermostat as a node on your network.
2. The Thermostat main screen shows a welcome message. Press the SIDE button to continue.
3. When your panel is ready to connect to the Thermostat, press the SIDE button to connect. This initiates the network connection process. The Thermostat's screen says "Connecting."
   - If the connection fails, the screen says, "Failed." Press the SIDE button to try connecting again.
4. When the Thermostat has successfully joined a Z-Wave network from the panel, the screen displays the message "Next".
5. Complete your setup on the VIVINT panel.
6. Press the SIDE button to continue.

Your panel indicates that the thermostat was successfully added to its network (see your specific controller's User Manual for details). To exclude the thermostat from a Z-Wave network see page 50.

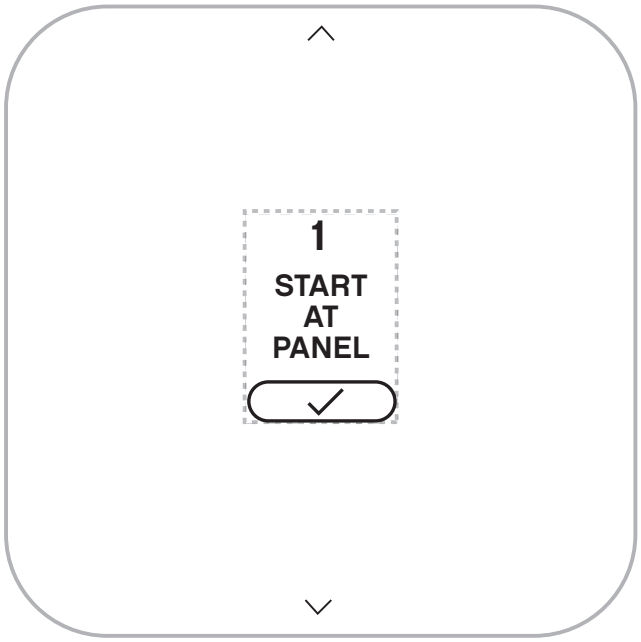

SmartStart Inclusion (Optional)

SmartStart enabled products can be added into a Z-Wave network by scanning the Z-Wave QR Code present on the product with a controller providing SmartStart inclusion. No further action is required and the SmartStart product will be added automatically within 10 minutes of being switched on in the network vicinity.

The SmartStart QR code can be found on the back of the product, side of the package, or also inserted as a sticker. The sticker contains the full DSK string. It's important that if you plan to use DSK that you keep this label in a safe place you'll remember.

NOTE: The Vivint panel currently does not support SmartStart inclusion.

SmartStart QR code on sticker

SmartStart QR code on box

SmartStart QR code on product

Connecting to Panel Workflow (Classic Z-Wave Inclusion)

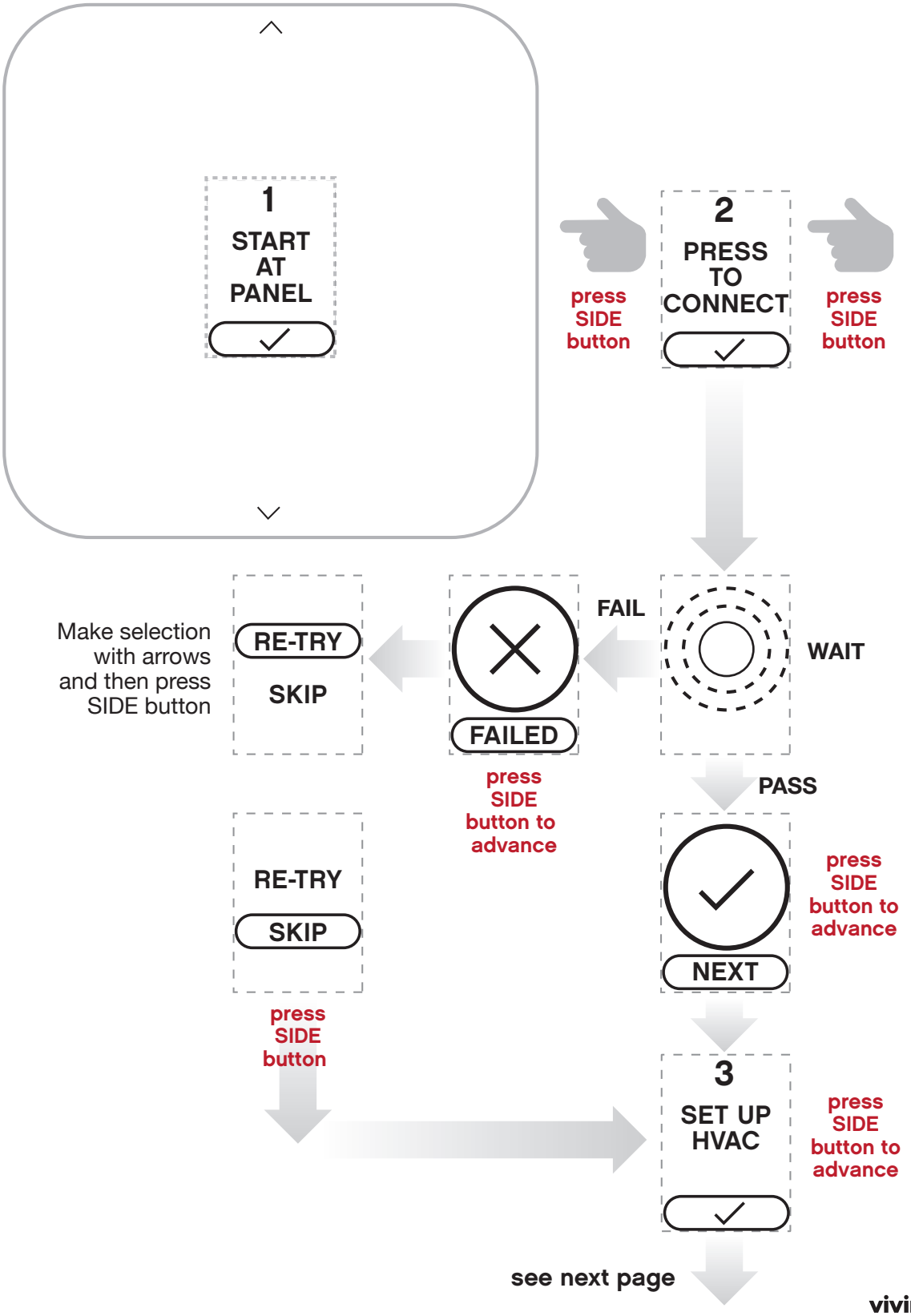

Setting up Humidity

1. Press the UP/DOWN button until the type of humidity system you have is displayed: None, Humidifier or Dehumidifier.
2. Under Activate, press the UP/DOWN buttons until the method your humidity system uses is displayed: with Heating, with Cooling, or Independent.

   Press SIDE button.
3. Under Fan, press the UP/DOWN button until the fan option your humidity system uses is displayed: Active or Inactive.

   Press SIDE button.

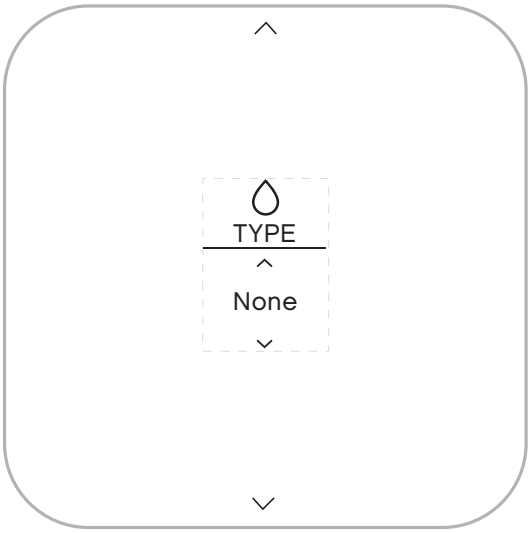

Setting Up Humidity Workflow

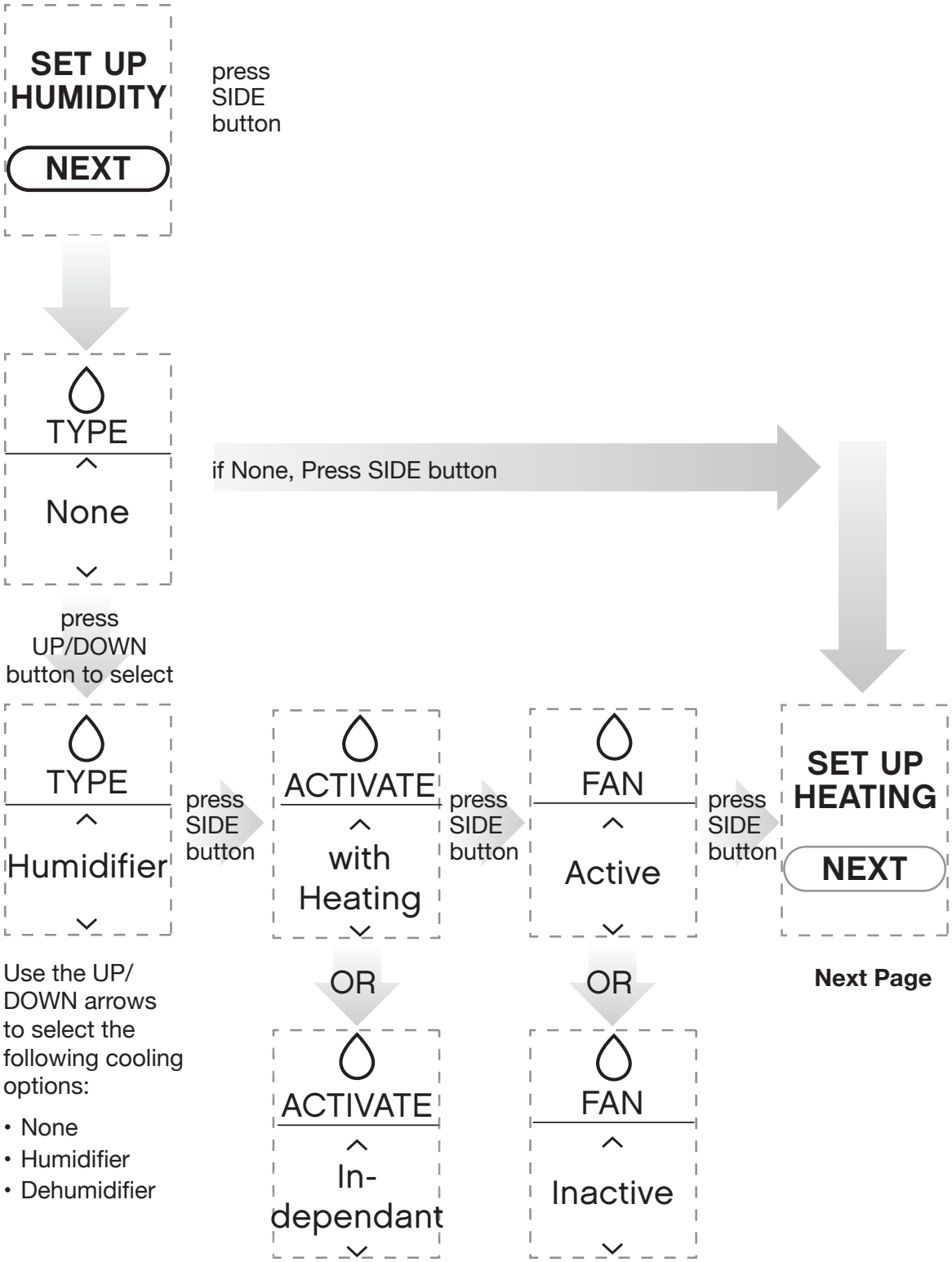

Use the UP/DOWN arrows to select the following cooling options:

- None
- Humidifier
- Dehumidifier

Setting up Heating

1. Press the UP/DOWN button until your heating type is displayed: None, Forced Air, Heat Pump or Radiant.
2. Under stages, press the UP/DOWN button until your system's heating stage type is displayed. Stages are not available if Radiant heating type was selected. For Forced Air you'll see 1, 2, or 3 stages. For Heat Pump you'll see 1, 2, 1+1 Aux, 1+2 Aux, 2+1 Aux, or 2+2 Aux. 3 stages Forced Air or 2+2 Aux Heat Pump utilize the auxiliary terminal, therefore, if your using humidity control these options will not be available.

   Press SIDE button.
3. Under Fuel, press the SIDE button until your heating fuel is displayed: Natural Gas, Propane, Fuel Oil and Electric. For Heat Pump systems, this field is labeled Aux Fuel.

   Press SIDE button.

Note: Auxiliary stages are only available if you select Heat Pump as the heating type.

Setting Up Heating Workflow

SET UP HEATING

NEXT

press SIDE button

TYPE

None

Use the UP/ DOWN arrows to select the following cooling options:

- None
- Forced Air
- Heat Pump
- Radiant

press SIDE button

STAGES

1

Use the UP/ DOWN arrows to select the following STAGE options:

- 1
- 2
- 1 + AUX
- 2 + AUX

Heat Pump Only

- 2 + 1 aux
- 2 + 2 aux

press SIDE button

FUEL

Natural Gas

Use the UP/ DOWN arrows to select the following STAGE options:

- Natural Gas
- Electric
- Propane
- Fuel Oil

press SIDE button

For HP Type only

O/B Wire

O Activated for Cool

OR

O/B Wire

B Activated for Heat

press SIDE button

SET UP COOLING

NEXT

Next Page

Setting up Cooling

1. Under Type, press the UP/DOWN button until your Cooling type is displayed: None, Air Condition or Heat Pump.
2. Under Stages, press the UP/DOWN button until the number of stages your system uses is displayed: 1(single) or 2 (mutlistage).

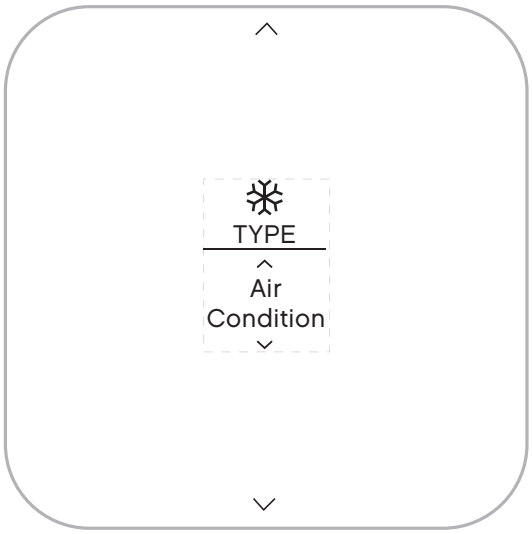

Setting Up Heating Workflow

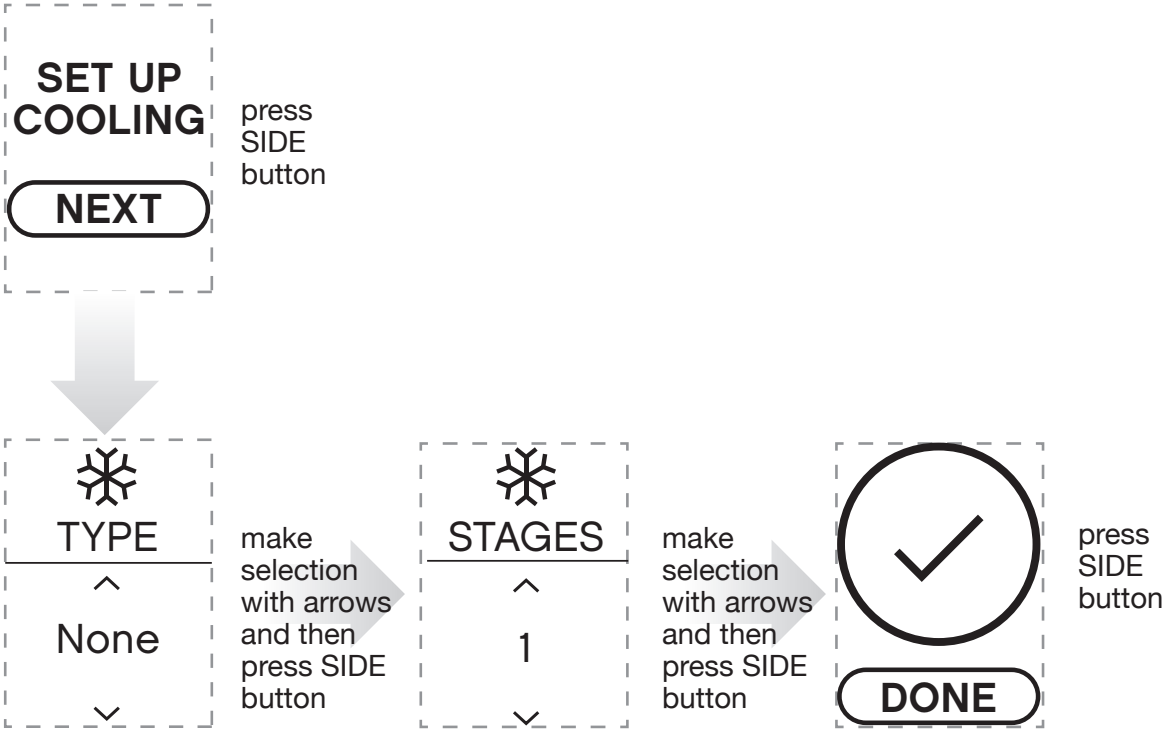

Use the UP/DOWN arrows to select the following COOLING TYPE options:

- None
- Air Condition
- Heat Pump (If selected for heating type)

Use the UP/DOWN arrows to select the following STAGE options:

- 1
- 2

Select Mode
See Next Page

Selecting Mode

To change mode, press the SIDE button. Use the UP/DOWN arrows to change the mode. OFF, HEAT, COOL, HEAT & COOL, E-HEAT.

E-HEAT: For Heat Pump Systems with Aux Heat Stages.

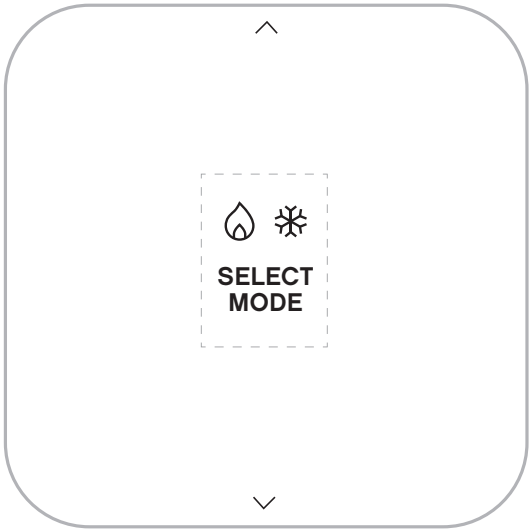

At this point your setup is complete.

Selecting Mode Workflow

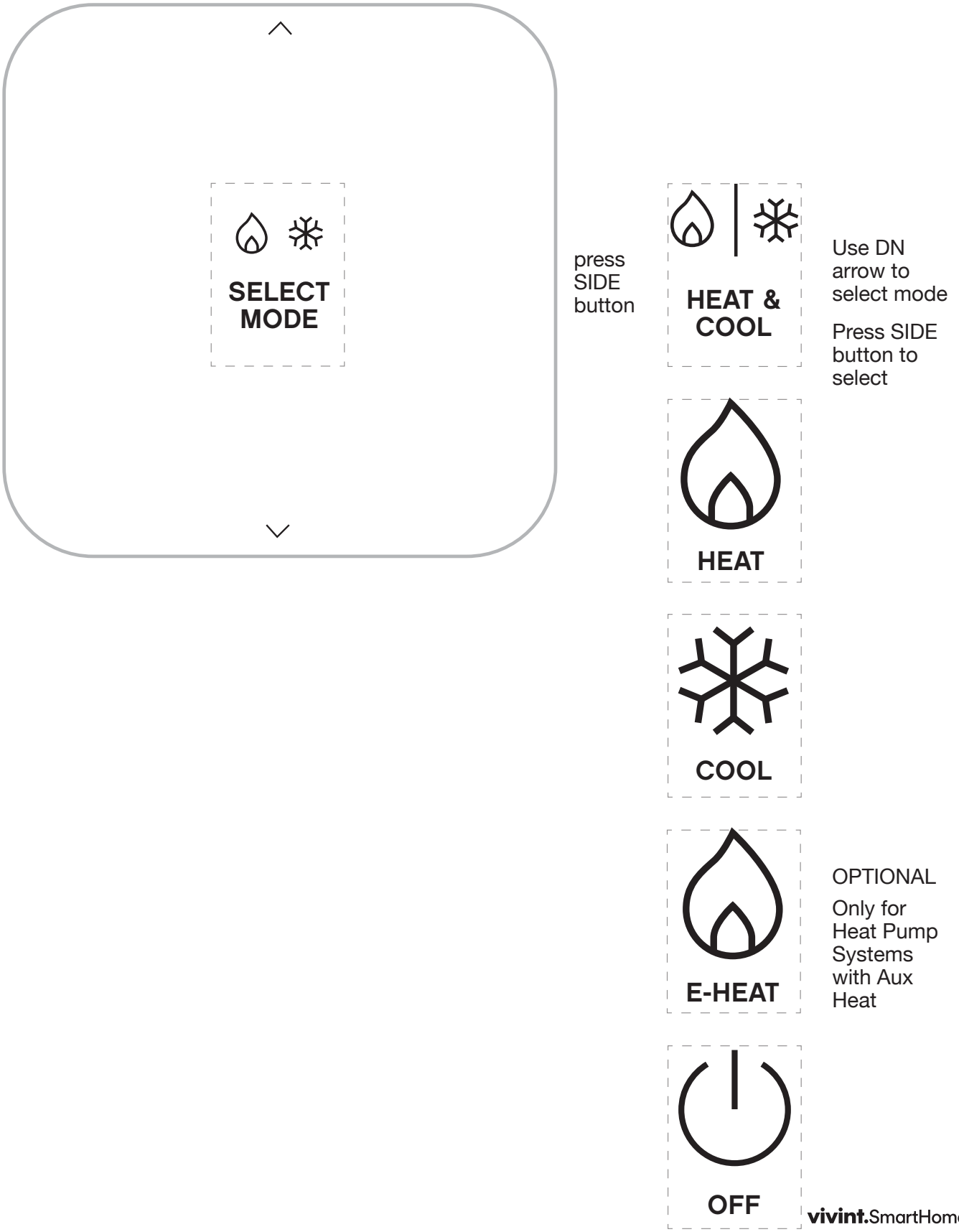

Testing the Installation

After installation, operation can be tested. In the Settings menu, under the User Settings, is the Testing menu. There is a heating test and a cooling test. The heating and cooling tests run for up to 30 minutes. You can stop a test at any time by selecting the **arrow** and pressing the SIDE button.

Use the UP and DOWN arrows to move the highlighted selection on the screen.

Use the SIDE button to make a selection or advance through options.

To Check Heating

1. From the Thermostat's Home screen, press and hold the SIDE button until the Settings menu appears (approximately 3 seconds).
2. Highlight User, then press the SIDE button. The User Settings menu opens.
3. Use the UP/DN arrows to select Testing. Press SIDE button. The Testing menu opens.
4. Use the UP/DN arrows to select Heat, Press the SIDE button. The Heat Test opens .
5. Press the SIDE button to start test. The Thermostat screen displays the following:
   - **HEAT TIME**: how long the test has been running in minutes and seconds
   - **ACTIVE:** the wires the system is using to communicate with the heating system (example: W, G)
   - **CHANGE**: the amount of temperature change caused during the test (example: +3 .4°)
6. Press the SIDE button to stop test.
7. Press the SIDE button again to exit back to TESTING menu.

A test of a successfully functioning heating system will show a rise in the temperature, as well as the proper wires indicated as being active. If the temperature appears to drop, or the wrong wires are indicated as being active, the test indicates a problem with the Thermostat installation. Check the wire connections and run the heating test again.

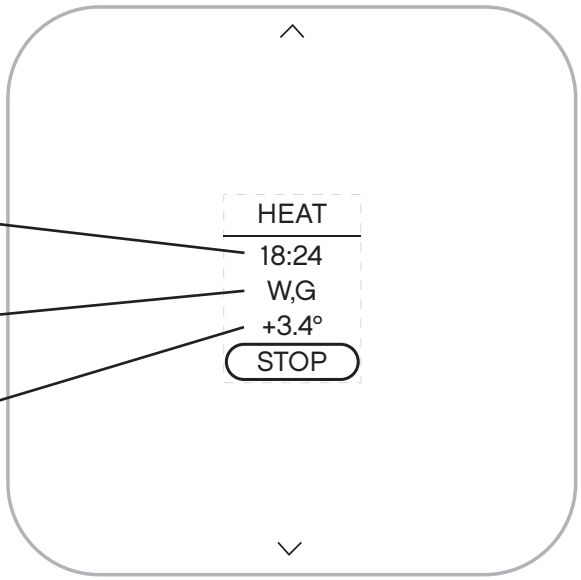

Testing the Installation

To Check Cooling

1. From the Thermostat's Home screen, press and hold the SIDE button until the Settings menu appears (approximately 3 seconds).
2. Highlight USER, then press the SIDE button. The USER Settings menu opens.
3. Use UP/DN arrows to select Testing, then press the SIDE button. The Testing menu opens.
4. Use UP/DN arrows to select Cool, then press the SIDE button. The Cool Test menu opens.
5. Press the SIDE button to start test. The Thermostat screen displays the following:
   - **COOL TIME**: how long the test has been running in minutes and seconds
   - **ACTIVE:** the wires the system is using to communicate with the cooling system (example: Y, G)
   - **CHANGE:** the amount of temperature change caused during the test (example: -2 .6°)
6. Press the SIDE button to stop test.
7. Press the SIDE button again to exit test and go back to TESTING menu.

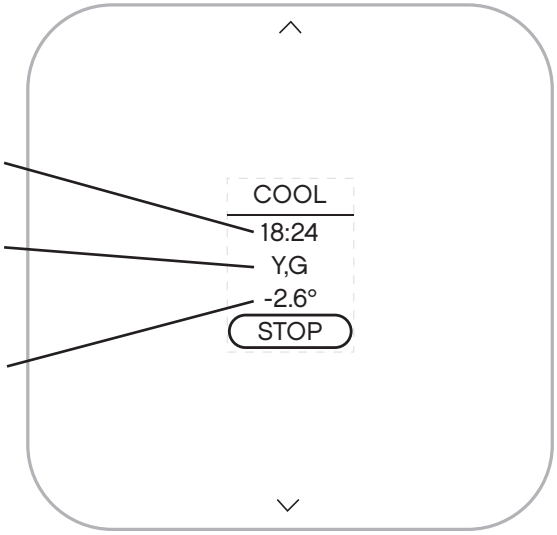

A test of a successfully functioning cooling system will show a drop in the temperature, as well as the proper wires indicated as being active. If the temperature appears to rise, or the wrong wires are indicated as being active, the test indicates a problem with the Thermostat installation. Check the wire connections and run the cooling test again.

NOTE: Do not operate AC if the outside temp is below 65°F.

Z-Wave and Power Supply

The thermostat's node type is pre-determined when it connects to the Z-Wave network; if the C-Wire is not connected and is only battery-powered when connecting to the network, the thermostat will remain a frequent listening routing slave (FLiRS) node until it is removed from the network.

When your thermostat is running on battery power, the Z-Wave radio will turn off to help conserve battery life. The Thermostat Z-Wave radio module supports Z-Wave beaming, which allows other devices in the network to wake up the Z-Wave module and accept commands and then go back to sleep.

When your thermostat is running on C-Wire power, the Z-Wave radio will stay on and actively help route messages within the Z-Wave network. The thermostat's node type is pre-determined when it connects to the Z-Wave network; if the C-Wire is present and powered when connecting to the network, the thermostat will remain an always-listening node until it is removed from the network.

Z-Wave and Thermostat Programs

You must connect the Thermostat to a Z-Wave network. This unit cannot operate without a network connection. When you are paired to a Z-Wave system, the Z-Wave application on your device controls your thermostat's programs. You can still temporarily override settings on the thermostat itself, but otherwise you control it remotely.

Product Overview 35
Home Screen 36
Outside Temp Screen 37
Menu Screen Settings Screen 38
Compressor Protection 39

Customization 40
User Settings 41
Units 41
Humidity 41
Display 42
Info 42
Installer Settings 43
Equipment 43
Calibration 44
Cycling 43
Staging 44/45
Network 45
Reset 46

Other Device Information 48
Low Battery Warning .....
Network Disconnected .....

Product Overview

Home Screen

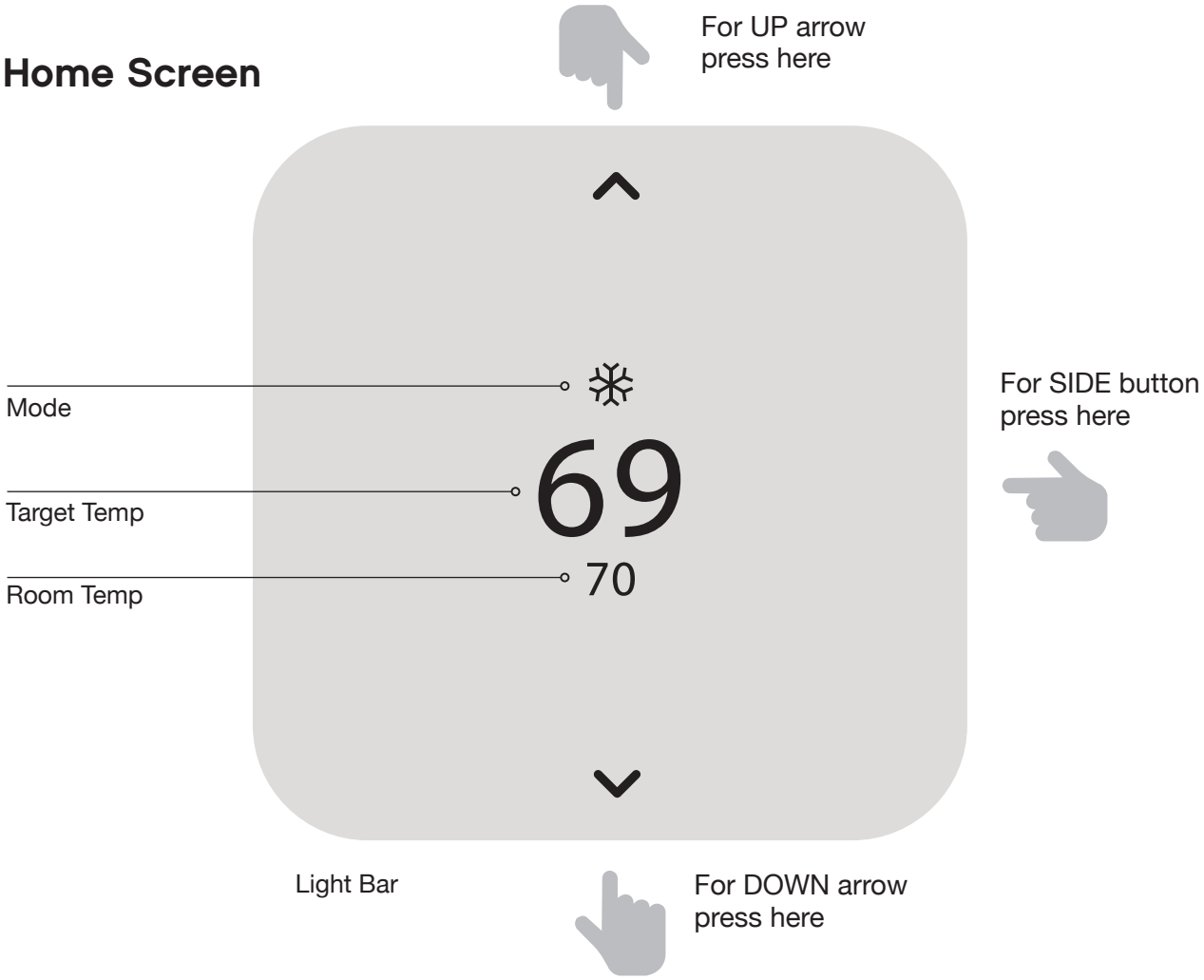

This is the default screen on the Thermostat. Anytime you press the front of the thermostat, the unit wakes from sleep (or senses you approaching, if utilizing C-wire and wake-on-approach is enabled), the screen lights up and displays the system's mode (top), the target temperature (center), and the current room temperature (bottom).

When in Heat mode, the light bar at the bottom of the unit glows orange. When in Cool mode, it glows blue. When the unit is off, the light bar does not glow. When the system is actively heating or cooling, the colored glow "breathes" when the display is on.

- To temporarily change the target temperature, press up/down. The system will meet the target temperature until the next program period starts or you change the system mode.

Navigating The Screens

- Press the UP/DOWN arrows to move the cursor on the screen
- Press the SIDE button to make a selection or scroll through options
- To go back to a previous screen, press and hold the UP arrow at the top of the screen and press the SIDE button.
- From the home screen, press the SIDE button to turn the system on. Press the SIDE button again to set the mode.

Mode

To change mode, when the home screen is displayed, press the SIDE button. Use the up/down arrows to change the mode.

OFF, HEAT, COOL, HEAT & COOL, E-HEAT

E-HEAT: For Het Pump Systems with Aux Heat ONLY

Fan

To change the fan mode, when the home screen is displayed, press the SIDE button twice. Use the up/down arrows to change the fan mode.

15 min., 30 min., 60 min., ALWAYS ON, STOP

Outside Temperature Screen

To see the outside temperature, press and hold the SIDE button for 3 seconds.

To see the inside humidity, press the UP/DOWN arrows.

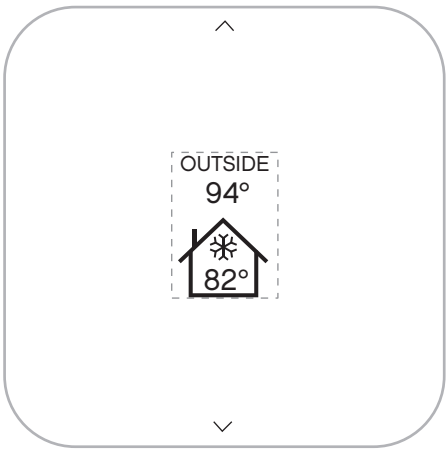

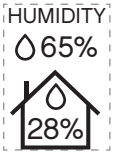

Settings Screen

This screen enables you to adjust the Thermostat's settings, such as display units (°F or °C), target humidity levels, how the display activates, see information about the Thermostat, and adjust installation settings.

To see this screen, from the Home screen, press and hold the SIDE button for six (6) seconds.

Use UP/DOWN arrows to change selection. Press side button to select the settings menu circled.

User Settings options include:

- Units
- Display
- Humidity (optional)
- Info
- Testing
- Back

Installer Settings options include:

- Equipment
- Network
- Calibrate
- Cycling
- Staging
- Reset
- Back

Z-Wave and Thermostat Programs

The Thermostat must be connected to a Z-Wave network in order to operate the device remotely through your panel or app. Use your Z-Wave application to adjust the heating and cooling programs that the Thermostat uses to run your system. You can temporarily override target temperatures and change system modes from the thermostat, but you must use the Z-Wave application to make permanent changes to programs.

Compressor Protection

The Thermostat has a minimum cycle time of five (5) minutes to protect your compressor from excessive wear from responding to thermostat changes. The Home screen shows the message “Cycle Delay”. The compressor will not come on until the five-minute delay is over.

Customization

User Settings

The Settings screen provides access to many features and settings of the Thermostat. Features you can control on the Settings screen are ºF / ºC display, humidity targets, display behavior, information about the Thermostat, and installer settings. The following pages provide detailed information about each of these settings.

From the Home screen, press and hold the SIDE button for three (3) seconds to access the settings screen. Then use the UP/DN arrows to select the desired user setting. Then press the SIDE button.

Units

The Thermostat can display either Fahrenheit or Celsius temperature units. The Thermostat can display room temperatures in a range from 28°F to 99°F (-2°C to 37°C) with increments of 0.5° (F or C).

1. Press DOWN to highlight Units, then press the SIDE button.
2. Using the UP or DOWN arrows, select an option, then press the SIDE button to confirm and return to USER settings.

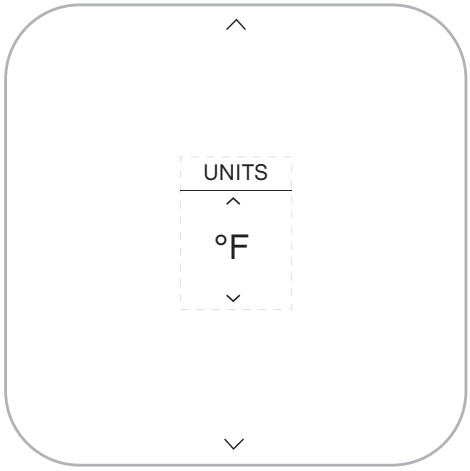

Options:

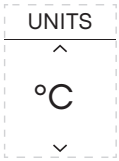

Display

The Thermostat display can operate in one of two modes: Wake on Approach or Wake on Button Press.

Wake on Approach means that the device's display will automatically turn on when it senses you approach within 3 (three) feet of the unit. This feature also sends notifications to the panel and mobile app that the thermostat has detected movement. This feature is only available when the thermostat is powered via C-wire.

Wake on Button Press means that you will have to press one of the buttons on the unit to wake the display.

2. Press DOWN to highlight Display, then press the SIDE button.
3. Press UP or DOWN to select an option, then press the SIDE button to confirm and return to USER settings.

Options:

Humidity

This screen is only available if your system includes humidity controlling equipment.

1. Press DOWN to highlight Humidity, then press the SIDE button.
2. Using the UP or DOWN arrows, select an option, then press the SIDE button to confirm and return to USER settings.

If enabled, set the humidity setpoint: 10-45%, default 40%.

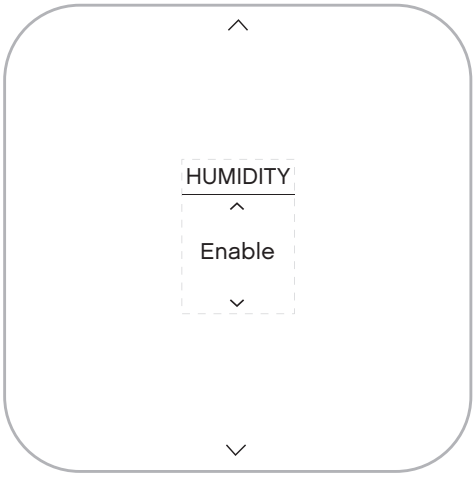

Options:

Info

Information about the Thermostat device includes:

POWER: The power supply the unit is currently using (batteries, C-wire, and/or transformer).

BATTERY: How much battery power is currently left, if batteries are installed in the unit.

HVAC TYPE: The HVAC Type setting the system is currently using.

ACTIVE RELAYS: The relays currently being used by the system.

NETWORK: Whether or not the unit is currently connected to a Z-Wave network.

SOFTWARE: The current software and firmware versions the unit is using.

1. Press DOWN arrows to highlight Info, then press the SIDE button. Information about the Thermostat displays.
2. Press UP or DOWN arrows to scroll through the available information. Press the SIDE button to exit and return to USER settings.

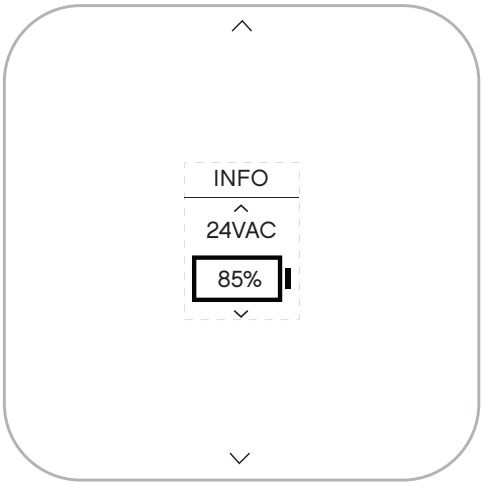

Options:

Testing

Testing options enable you to test the functionality of your heating and cooling equipment's connection to the Thermostat. For instructions on running these tests, see page 36 in the Installation Guide.

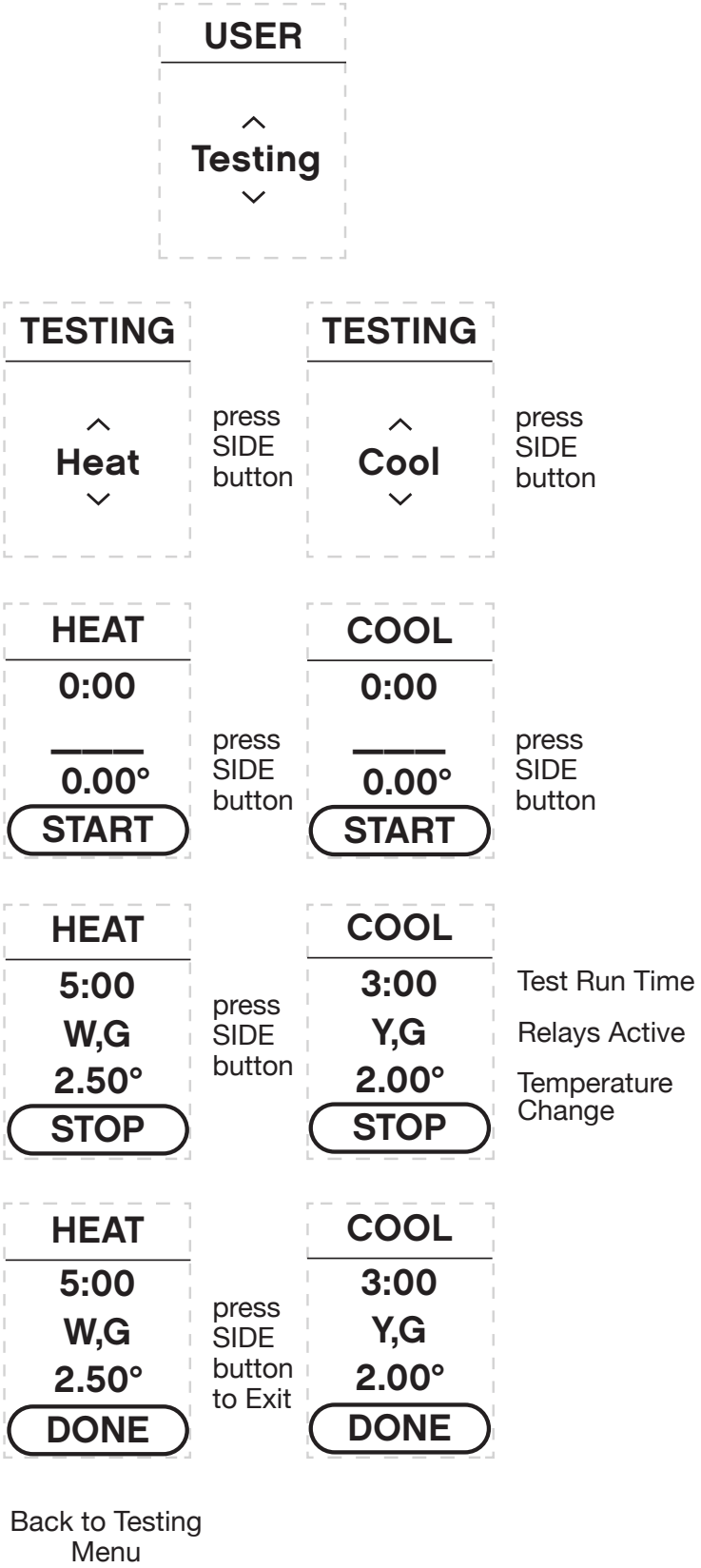

Installer Settings

Installer settings control the following Thermostat functions:

EQUIPMENT: heating, cooling, humidity control, and fan behavior
The Equipment settings menu is typically used during installation of the Thermostat. The options in this menu enable you to set the heating, cooling and humidity control.

NETWORK: the Thermostat's connection to a Z-Wave Network

CALIBRATE: Offsets the unit's temperature display

CYCLING: This feature enables you to set the acceptable variance in temperature between the Thermostat's setting and the current room temperature before the heating or cooling system will turn on. The Cycling range can be from 0.5 to 4.0F (.25 to 2C). For example, if Cycling is set to 2.0°F and the Thermostat is set to 70°F target temperature, the heat cycle will start when the room temperature drops to 68°F. Similarly, the cooling system will start when the room temperature increases to 72°F. The HVAC runs until the room reaches the target temperature, and then shuts off.

STAGING: Used for multiple stage systems only. Staging is the number of degrees between the room temperature and the target temperature at which the next stage in multi-stage systems will engage to bring the room temperature back to the target. The default is 2°F. The programmable range is 2°F to 6°F (1°- 3°C).

RESET: resetting the Thermostat's settings to factory defaults.

WARNING

Be sure to turn the thermostat operating mode to OFF before changing HVAC setup

To get into Installer Settings, from the Home Screen, press and hold the SIDE button for three (3) seconds to access the SETTINGS menu.

Use the UP/DN arrows to select the INSTALLER SETTINGS. Press the side button.

Use the UP/DN arrows to select the desired installer setting.

Equipment

From the Installer Setting menu, select Equipment and press the SIDE button.

The Equipment menu will open and has the following menu items

- Heating
- Cooling
- Humidity
- Back

Use the UP/DOWN arrows to select the menu item.

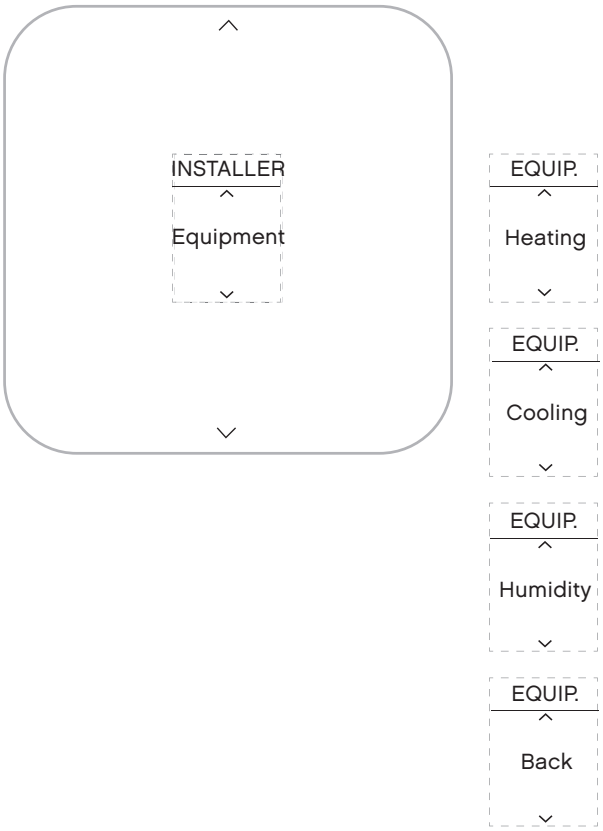

Heating

Press SIDE button to select

TYPE

Use UP/DOWN buttons to select heating system type

- None
- Forced Air
- Heat Pump
- Radiant

Press SIDE button to select

STAGES

Use UP/DOWN arrows to select number of Heating Stages

- 1
- 2
- -3 (forced air only)
- -1+1 Aux (heat pump only)
- -1+2 Aux (heat pump only)
- -2+1 Aux (heat pump only)
- -2+1 Aux (heat pump only)

Press SIDE button to select

FUEL

Use UP/DOWN arrows to select the system fuel type

- Natural Gas
- Electric
- Propane
- Fuel Oil

Press SIDE button to select

DONE is displayed

Press SIDE button to return to EQUIP menu

Cooling

Press SIDE button to select Cooling Setup

TYPE

Use UP/DOWN arrows to select Cooling system type:

- None
- Air Condition
- Heat Pump

Press SIDE button to select

STAGES

Use UP/DOWN arrows to select number of cooling stages:

- 1
- 2

Press SIDE button to select

DONE is displayed

Press SIDE button to return to EQUIP menu

Humidity

Press SIDE button to select Humidity setup

TYPE

Use UP/DOWN arrows to select the Humidity system type:

- None
- Humidifier
- Dehumidifier

Press SIDE button to select system type

ACTIVATE

Use UP/DOWN arrows to select when Humidity control is active

- Independent (Humidity control turns on independent of Heating or Cooling operation)
- With Heating (If Humidifier type) only during Heating operation
- With Cooling (If Dehumidifier type) only during cooling operation

FAN

Use UP/DOWN arrows to select Fan action

- Inactive (No Fan action when Humidity mode is on)
- Active (Turn on Fan when Humidity mode is on)

Press SIDE button to select Fan type

DONE is displayed

Press SIDE button to return to EQUIP menu

Network

Network settings enable you to connect to a Z-Wave Network using Classic Inclusion, and to reset the Thermostat to a Z-Wave Network, and to reset the network connection.

Before starting this procedure, go to your Vivint panel and prepare it for new devices. Once it is ready, connect the Thermostat to the network.

1. Press DOWN arrow to highlight Network, then press the SIDE button.

If the thermostat IS NOT connected to the Z-Wave Network, “Connect” will be displayed. Press the SIDE button to connect.

If the thermostat IS connected to the Z-Wave Network, “Disconnect” will be displayed. Press the SIDE button to disconnect.

Select “Back” to exit and return to INSTALLER menu.

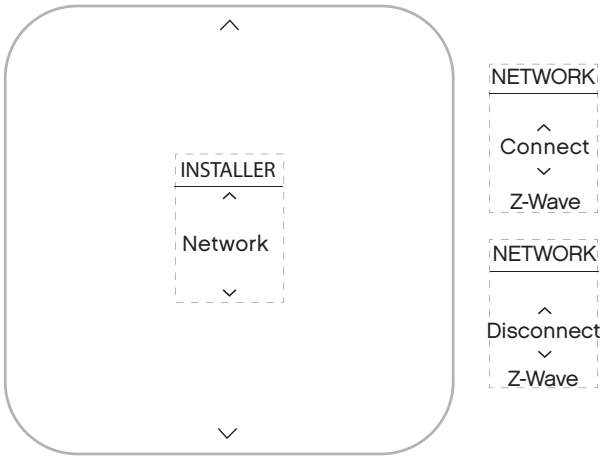

Calibration

1. Press the DOWN arrow to highlight Calibration, then press the SIDE button.The current temperature offset displays.
2. Press UP or DOWN arrow to change the value, then press the SIDE button to confirm.
3. Ranges are +5 to -5, default 0.

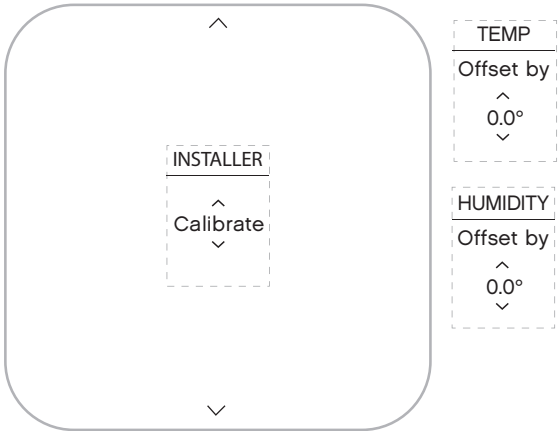

Cycling

1. Press the DOWN arrow to highlight Cycling, then press the SIDE button. The current cycling value displays.
2. Press UP or DOWN arrow to change the value, then press the SIDE button to confirm.
3. Ranges are in .5 increments: from 3.0 to 1.0, default 1.0.

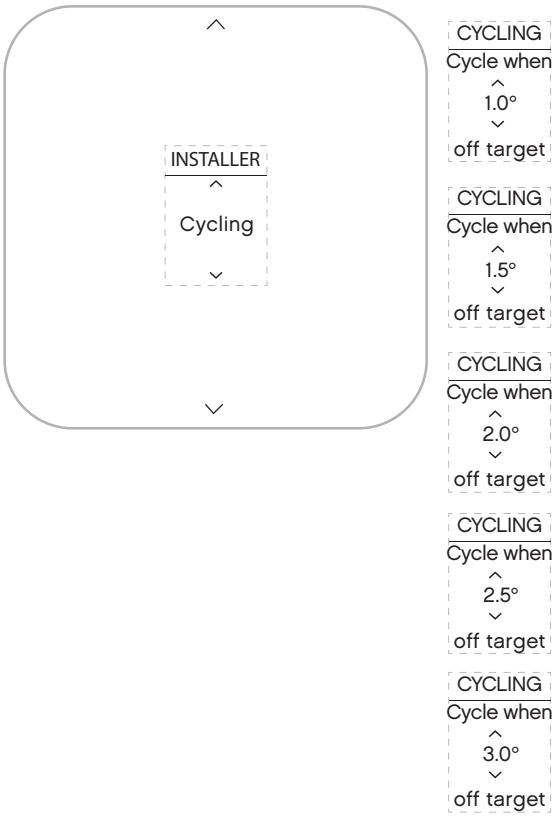

Staging

Used for multiple stage systems only. Staging is the number of degrees between the room temperature and the target temperature at which the next stage in multi-stage systems will engage to bring the room temperature back to the target. The default is 2°F. The programmable range is 2°F to 6°F (1°- 3°C).

1. Press DOWN arrow to highlight Staging, then press the SIDE button. The current staging value displays.
2. Press UP or DOWN arrow to change the value, then press the SIDE button to confirm.
3. Ranges are in .5 increments: 2.5, 3.0, 3.5, 4.0, 4.5, 5.0, default 2.5.

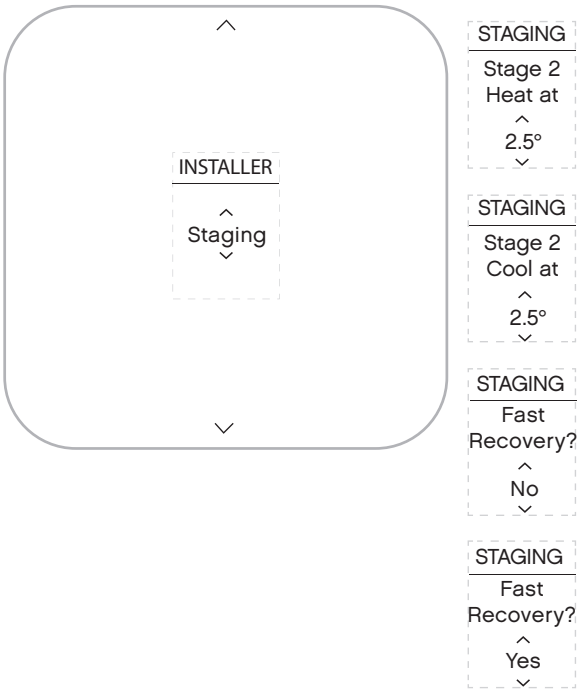

Reset

Reset will restore the thermostat settings to the factory defaults. It will also disconnect the thermostat from the Z-Wave network.

1. Press the DOWN arrow to highlight Reset, then press the SIDE button.
2. Confirm that you want to reset the thermostat, select yes, then press the SIDE button. The thermostat resets.

Please use this procedure only when the network primary controller is missing or otherwise inoperable.

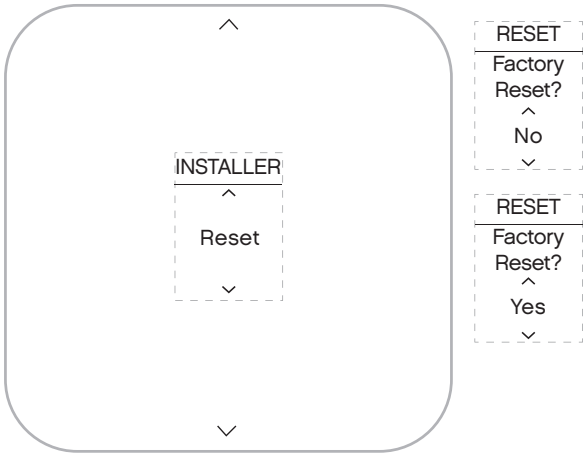

Other Device Information

Low Battery Warning

The Thermostat displays this screen when the batteries are running low on charge and should be replaced. This screen will only display once per day the first time the screen wakes.

1. Press the SIDE button to dismiss this warning.
2. Turn the thermostat mode to OFF (from heat or cool).
3. Replace the batteries.
4. Turn the thermostat mode back on to HEAT or COOL.

Your settings will be retained and the thermostat will automatically reconnect to the Z-Wave Network.

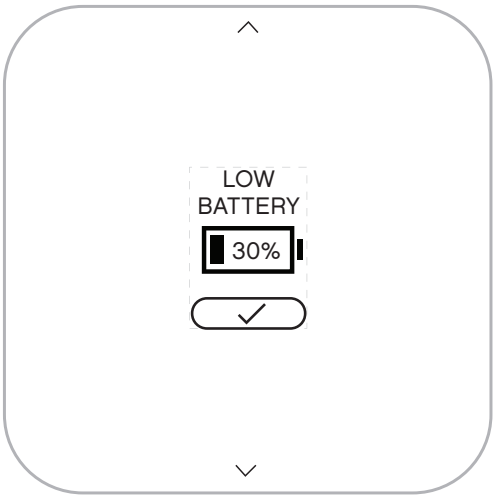

FCC WARNING

Changes or modifications to this unit not expressly approved by the party responsible for compliance could void the user's authority to operate the equipment.

NOTE: This equipment has been tested and found to comply with the limits for a Class B digital device, pursuant to Part 15 of the FCC Rules. These limits are designed to provide reasonable protection against harmful interference in a residential installation. This equipment generates, uses and can radiate radio frequency energy and, if not installed and used in accordance with the instructions, may cause harmful interference to radio communications.

However, there is no guarantee that interference will not occur in a particular installation. If this equipment does cause harmful interference to radio or television reception (which can be determined by turning the equipment off and on), try to correct the interference by following these suggestions:

- Reorient or relocate the receiving antenna.
- Increase the separation between the equipment and receiver.
- Connect the equipment to an outlet on a circuit different from that to which the receiver is connected.
- Consult the dealer or an experienced radio/TV technician for help.

WARNING: Changes or modifications to this receiver not expressly approved by Vivint void the user's authority to operate this equipment.

RF Exposure info -- (manual)

This equipment complies with FCC's and IC's RF radiation exposure limits set forth for an uncontrolled environment. The antenna(s) used for this transmitter must be installed and operated to provide a separation distance of at least 20 cm from all persons and must not be collocated or operating in conjunction with any other antenna or transmitter. Installers must ensure that 20cm separation distance will be maintained between the device (excluding its handset) and users.

This Class B digital apparatus complies with Canadian IECS-003. Operation is subject to the following two conditions:

(1) This device may not cause interference; and

(2) This device must accept any interference, including interference that may cause undesired operation of the device.

C'et appareil numerique de la classe B est conforme á la norme NMB-003 du Canada. L'exploitation est autorisée aux deux conditions suivantes:

(1) l'appareil ne doit pas produire de brouillage;

(2) l'utilisateur de l'appareil doit accepter tout brouillage radioélectrique subi, même si le brouillage est susceptible d'en compromettre le fonctionnement.

Statement Of Use

100% Compatible with all popular residential HVAC systems: 24VAC single stage and two stage conventional heating systems (gas, oil, electric), heat pumps with up to two stages of heat and up to two stages of auxiliary heat (electric or fossil), zoned forced air and zoned hot water (2 or 3 wire), millivolt systems (a 12- 24V AC or DC source), one or two stage cooling, and hybrid systems. Do not use this thermostat with with line voltage heating systems.

Z-Wave Specifications

Supported Commands:

- Battery Report
- Device Reset Locally Notification
- Sensor Multilevel Report
- Thermostat Setpoint Report
- Thermostat Mode Report V3
- Thermostat Fan Mode Report
- Thermostat Fan State Report
- Thermostat Operating State Report V2
- Notification Report V8
- Configuration Report

Z-Wave Association

- Group Number: 1
- Group Name: Lifeline
- Max Nodes: 5
- Profile ID: 0x0001
- Endpoint: 0