Z-Wave™ Dim Remote Control

09.ZV9001K2.04766

Important: *Read All Instructions Prior to Installation*

Function introduction

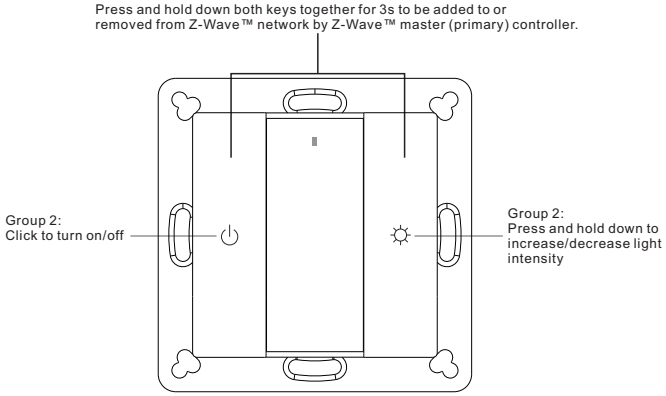

Front side

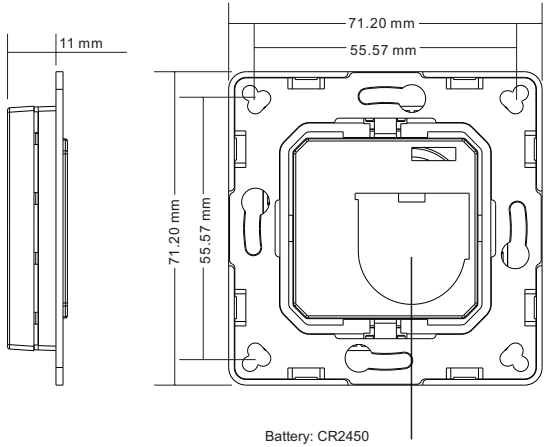

Battery: CR2450
Before the first use, please open the battery cover and remove the protective film

Back side

Product Data

Z-Wave Frequency	868.42MHz
Power Supply	3VDC(1xCR2450 battery)
Operating temperature	0 to 40°C
Relative humidity	8% to 80%
Dimensions	71.2x71.2x13.6mm
Waterproof Grade	IP20

Safety & Warnings

- This device contains a button lithium battery that shall be stored and disposed properly.
- DO NOT expose the device to moisture.

Quick Start

How to install:
- Step 1: turn on your remote control.
- Step 2: activate inclusion mode on your Z-Wave™ controller.
- Step 3: activate inclusion mode of your remote control by pressing and holding down both ⏻ and ☼ buttons together over 3 seconds.

Product Description

The remote control is a Z-Wave device that can both control other Z-Wave devices and activate scenes in Gateways. Although it is controlling other devices, the device cannot act as Z-Wave network controller (primary or secondary) and will always need a Z-Wave network controller to be included into a Z-Wave network. It also supports the Over The Air (OTA) feature for the product's firmware upgrade. This product can be operated in any Z-Wave network with other Z-Wave certified devices from other manufacturers. All mains operated nodes within the network will act as repeaters regardless of vendor to increase reliability of the network.

The remote control has following functions:

1. Control of groups of other Z-Wave devices using 'ON', 'OFF' and Dim commands.

2. Activation of scenes in Gateway mode.

The encryption modes that the remote control supports are S0, S2 Authenticated, S2 Unauthenticated. When the remote control is being included into a Z-Wave network, you can use your primary controller/gateway to enable one encryption mode or disable encryption. (The primary controller/gateway shall support encryption mode configuration).

Installation Guide

Please read carefully the enclosed user manual before installation of remote control, in order to ensure an error-free functioning.

The remote control unit supplied as complete set for flush mounting in the standard circular European wall boxes with 60mm diameter.

Inclusion (Adding to a Z-Wave network)

Step 1. Make sure the remote control does not belong to any Z-Wave network, short press any button, if LED indicator does not turn on, the remote control does not belong to any network, then continue step 2,if LED indicator turns on, it means the remote control has already been included to a network, please first set the remote control to exclusion mode (refer to the part "Exclusion" of this manual),then continue step 2.

Step 2. Set primary controller/gateway into inclusion mode (Please refer to your primary controllers manual on how to turn your controller into inclusion).

Step 3. Press and hold down both ⏻ and ☼ buttons over 3 seconds, LED indicator turns on, the remote control will be set to inclusion mode, and waiting to be included, after 10s LED indicator blinks 6 times quickly to indicate successful inclusion. The remote control is a sleepy device, after inclusion it will not enter into sleepy mode immediately, and will continue activation status for 30s and wait data interaction from the gateway, the LED indicator will stay solid on, please be patient to wait LED indicator to turn off.

Exclusion (Removing from a Z-Wave network)

There are two exclusion methods:

Method 1: Exclusion from the primary controller/gateway as follows:

1. Set the primary controller/gateway into exclusion mode (Please refer to your primary controllers manual on how to set your controller into exclusion).

2. Press and hold down both ⏻ and ☼ buttons over 3 seconds, LED indicator turns on, the remote control will be set to exclusion mode, and waiting to be excluded, after 7s LED indicator blinks 4 times quickly to indicate successful exclusion.

Method 2: Factory reset the remote control will force the remote control to be excluded from a network. (please refer to the part “Factory Reset” of this manual)

Note: Factory reset is not recommended for exclusion, please use this procedure only if the primary controller/gateway is missing or otherwise inoperable.

How to check whether the remote control already included to a network

Short press any button, if LED indicator blinks 3 times, the remote control does not belong to any network, if LED indicator turns on, it means the remote control has already been included to a network.

If the remote control already belongs to a network, follow the exclusion process before including it in your network. Otherwise inclusion of this device will fail.

Factory Reset

Press and hold down both ⏻ and ☼ buttons together for over 10 seconds, LED indicator turns on and then blinks 4 times quickly to indicate successful factory reset.

Note: Please use this procedure only when the network primary controller is missing or otherwise inoperable.

Association

Z-Wave devices control other Z-Wave devices. The relationship between one device controlling another device is called association. In order to control a different device, the controlling device needs to maintain a list of devices that will receive controlling commands. These lists are called association groups and they are always related to certain events (e.g. button pressed). In case the event happens all devices stored in the respective association group will receive a common wireless command.

Association Groups:

Each group supports maximum 5 nodes for association, the same device can be associated with multiple groups on the remote control simultaneously, to ensure better control experience, the remote control shall remove the associated devices that are not under working status from association groups in time.

Association Groups	Group Name	Max Nodes	Description
Group 1	Lifeline	5	1. Send Command Class "Device Reset Locally Notification V1" to associated devices of this group to report factory reset information when factory reset the remote control. 2. When remote control battery power value changes, send Command Class "Battery Report V1" to associated devices of this group to report power value information. 3. Short press or press and hold down any button to send scene activation command to the associated devices of this group using Command Class “Central Scene Notification V3”
Group 2	Launch 1	5	Short press button ⏻ to send ON/OFF command to associated devices of this group using Command Class "Basic Set V2". Press and hold down button ☼ to send light intensity increase/decrease command to associated devices of this group using Command Class "Multilevel V4".

Set and unset associations:

(Note: All association information will be cleared automatically once the remote control is excluded from a network.)

There are two methods to set associations:

1. Set association by operating primary controller/gateway to send association command to the remote control:

When set association from primary controller/gateway, the remote control shall be activated first, if it is not activated, you should activate it manually.

The primary controller/gateway sends association command to the remote control using “Command Class ASSOCIATION” or “Command Class Multi Channel Association”

2. Set association by operating the remote control and devices to be controlled:

To control a Z-Wave device from the remote control the node ID of this device needs to be assigned to one of the two association groups. This is a three-step process:

1. Press and hold down both buttons ⏻ and ☼ over 3 seconds, LED indicator turns on.

2. Short press ⏻ button within 7s to associate the device to this group, short press ☼ button within 7s to remove association of the device from this group.

3. Operate the device to be controlled to send Node Information Frame (please refer to the device manual) within 10 seconds, or set the device to exclusion mode within 10 seconds, since it will send Node Information Frame in exclusion mode, LED indications are as follows:

LED blinks twice to indicate that the remote control failed to add the associated device (the association group has already added maximum quantity associated devices that it supports).

LED blinks 5 times to indicate that the remote control added the associated device successfully.
LED blinks 8 times to indicate that the remote control removed the associated device successfully.

To remove all associated devices in an association group on the remote control directly:
1. Press and hold down both buttons ⏻ and ☼ over 3 seconds, LED indicator turns on.

2. Click ☼ button on the remote control 5 times continuously within 7 seconds to remove all associated devices of this group, LED indicator blinks 8 times to indicate that the associated devices are removed successfully.

Operating the device

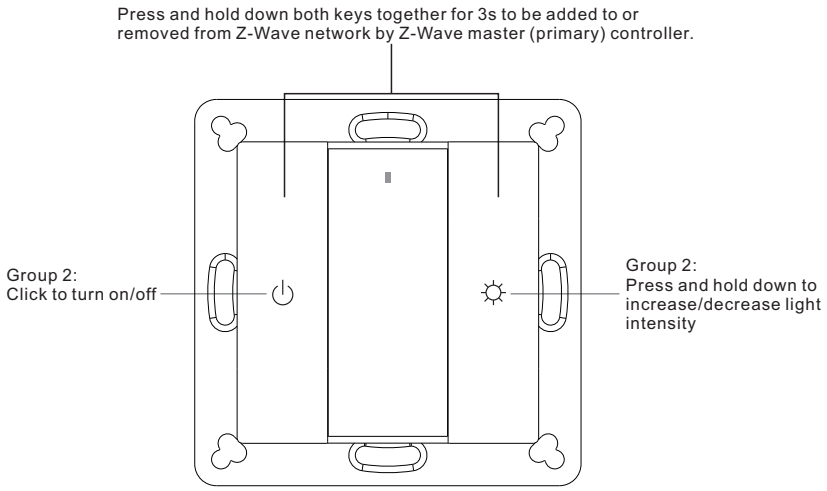

• Short press ⏻ button, send ON/OFF command to all associated devices of Association Group 2.

• Press and hold down ☼ button, send light intensity increase/decrease command to all associated devices of Association Group 2.

• Short press or press and hold down any button to send scene activation command to association group 1 using Command Class “Central Scene Notification V3”.

How to communicate with the device

The remote control is under sleepy mode for most of the time to save battery power. It can not receive wireless command under sleepy mode. Before the gateway interacts data with the remote, the remote control shall be activated manually first. Short press any button to activate the remote control for 3s, and press and hold down ⏻ and ☼ buttons together over 1 second to activate the remote control for 7s.

Node Information Frame

The Node Information Frame is the business card of a Z-Wave device. It contains information about the device type and the technical capabilities. The inclusion and exclusion of the device is confirmed by sending out a Node Information Frame. Beside this it may be needed for certain network operations to send out a Node Information Frame.

How to send out Node Information Frame:

Set the wall controller into inclusion/exclusion mode: Press and hold down both ⏻ and ☼ buttons over 3 seconds, LED indicator turns on to indicate the wall controller has already sent out Node Information Frame, the user can repeat the operation to set the wall controller to quit “inclusion/exclusion mode”.

Technical Data

Battery Type	1*CR2450
Frequency	868.42 MHz
Wireless Range	up to 100 m outside, on average up to 40 m inside buildings
SDK	6.71.03
Explorer Frame Support	Yes
Device Type	Wall Controller
Generic Device Class	Switch Remote
Specific Device Class	Switch Remote Multilevel
Routing	No
FLiRS	No

Z-Wave Plus™ Info

Parameter	Value
Z-Wave Plus Version	1
Role Type	Slave Portable
Node Type	ZWAVEPLUS
Installer Icon Type	0x0b00 (ICON_TYPE_GENERIC_REMOTE_CONTROL_SIMPLE)
User Icon Type	0x0b00 (ICON_TYPE_GENERIC_REMOTE_CONTROL_SIMPLE)

Manufacturer Specific

Parameter	Value (hex)
Manufacturer ID	0x0330
Product Type ID	0x0003
Product ID	0xa30f

SUPPORTED COMMAND CLASS

- COMMAND_CLASS_ZWAVEPLUS_INFO_V2
- COMMAND_CLASS_ASSOCIATION_V2
- COMMAND_CLASS_MULTI_CHANNEL_ASSOCIATION_V3
- COMMAND_CLASS_CENTRAL_SCENE_V3
- COMMAND_CLASS_ASSOCIATION_GRP_INFO_V1
- COMMAND_CLASS_TRANSPORT_SERVICE_V2
- COMMAND_CLASS_VERSION_V2
- COMMAND_CLASS_MANUFACTURER_SPECIFIC_V2
- COMMAND_CLASS_DEVICE_RESET_LOCALLY_V1
- COMMAND_CLASS_FIRMWARE_UPDATE_MD_V4
- COMMAND_CLASS_POWERLEVEL_V1
- COMMAND_CLASS_BATTERY_V1
- COMMAND_CLASS_SECURITY_V1
- COMMAND_CLASS_SECURITY_2_V1
- COMMAND_CLASS_WAKE_UP_V2
- COMMAND_CLASS_SUPERVISION_V1

Controlled Command Classes

- COMMAND_CLASS_CENTRAL_SCENE_V3
- COMMAND_CLASS_BASIC_V2
- COMMAND_CLASS_SWITCH_MULTILEVEL_V4
- Multi Channel V3
- Security_V1
- Security_2_V1

Configuration Command Class

Parameter HEX (DEC)	Size	Description	Default Value
0x01(1) (Only write in parameter, no report feedback when get the parameter)	2	1. Value=0x55AA, other values are invalid, factory reset the wall controller	- -

Installation

1.Remove battery insulator

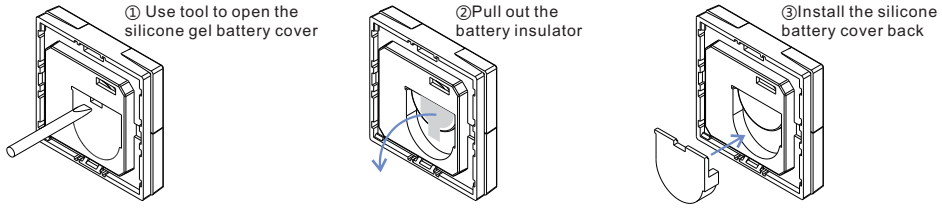

2.Install the controller to wall(2 methods)

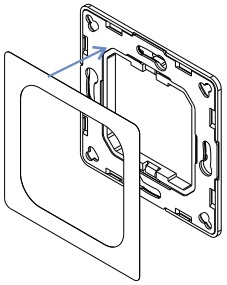

Method 1: Stick 3M glue on the back of the bracket and then stick the bracket to the wall

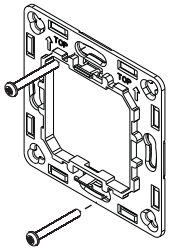

Method 2: Screw the bracket to the wall

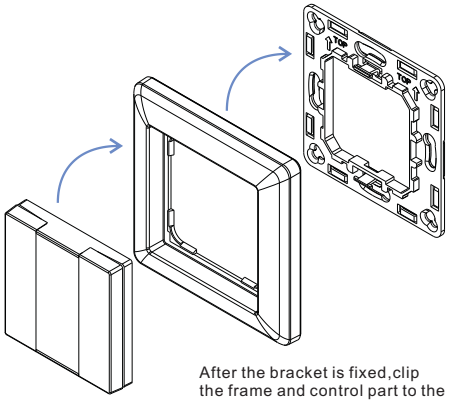

After the bracket is fixed,clip the frame and control part to the bracket in sequence