Yale® Z-Wave Plus™ Smart Module Installation Guide

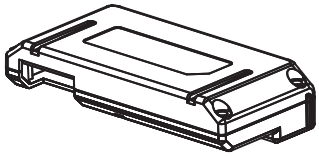

Adding a Yale Z-Wave Plus™ Smart Module to your Assure Lock & Z-Wave"Please use this procedure only when the network primary controller is missing or otherwise inoperable." System

Please use this procedure only when the network primary controller is missing or otherwise inoperable

1. Install the Yale Smart Module into the slot above the battery compartment
   IMPORTANT: The batteries must be removed before removing the Yale Smart Module:
   - Remove battery cover
   - Remove batteries
   - Insert or remove Yale Smart Module
   - Reinstall batteries
   - Reinstall battery cover

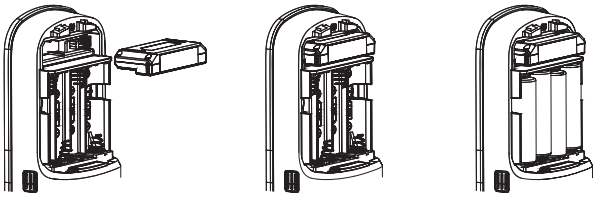

2. Open the Z-Wave system's smart home or alarm app on your smartphone or tablet

3. Follow the in-app instructions for adding a new device

4. On your lock keypad, enter your master entry code followed by the ⚙ icon

5. Press the 7 key followed by the ⚙ icon

6. Press the 1 key followed by the ⚙ icon

Removing a Yale Z-Wave Plus Smart Module from your Assure Lock & Z-Wave System

1. On your lock keypad, enter your master entry code followed by the ⚙ icon

2. Press the 7 key followed by the ⚙ icon

3. Press the 3 key followed by the ⚙ icon

4. Open the Z-Wave system's smart home or alarm app and follow the instructions for removing a device

5. Remove the Yale Smart Module from the slot above the battery compartment
   IMPORTANT: The batteries must be removed before removing the Yale Smart Module:
   - Remove battery cover
   - Remove batteries
   - Insert or remove Yale Smart Module
   - Reinstall batteries
   - Reinstall battery cover

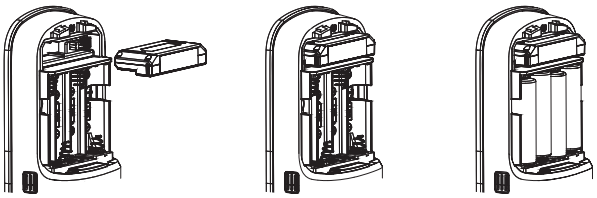

6. If you're adding a new Yale Smart Module, follow the instructions included with it

WARNING: Changes or modifications to this device, not expressly approved by Yale Home could void the user's authority to operate the equipment.

This device is a security enabled Z-Wave Plus product that is able to use encrypted Z-Wave Plus messages to communicate to other security enabled Z-Wave Plus products. This device must be used in conjunction with a Security Enabled Z-Wave Controller in order to fully utilize all implemented functions. This product can be operated in any Z-Wave network with other Z-Wave certified devices from other manufacturers. All non-battery operated nodes within the network will act as repeaters regardless of vendor to increase reliability of the network.

FCC:
Contain FCC ID: U4A-YRHCPZW0FM
Model: YRMZW2-US
This equipment has been tested and found to comply with the limits for a Class B digital device, pursuant to Part 15 of the FCC Rules. These limits are designed to provide reasonable protection against harmful interference in a residential installation. This equipment generates, uses, and can radiate radio frequency energy and, if not installed and used in accordance with the instructions, may cause harmful interference to radio communications. However, there is no guarantee that interference will not occur in a particular installation. If this equipment does cause harmful Interference to radio or television reception, which can be determined by turning the equipment off and on, the user is encouraged to try to correct the interference by one or more of the following measures:

- Reorient or relocate the receiving antenna.
- Increase the separation between the equipment and receiver.
- Connect the equipment into an outlet on a circuit different from that to which the receiver is connected.
- Consult the dealer or an experienced radio/TV technician for help.

THIS DEVICE COMPLIES WITH PART 15 OF THE FCC RULES. OPERATION IS SUBJECT TO THE FOLLOWING TWO CONDITIONS.
(1) THIS DEVICE MAY NOT CAUSE HARMFUL INTERFERENCE, AND (2) THIS DEVICE MUST ACCEPT ANY INTERFERENCE RECEIVED, INCLUDING INTERFERENCE THAT MAY CAUSE UNDESIRED OPERATION.

Industry Canada:
Contain IC: 6982A-YRHCPZW0FM
Model: YRMZW2-US
Section 7.1.2 of RSS-GEN Under Industry Canada regulations, this radio transmitter may only operate using an antenna of a type and maximum (or lesser) gain approved for the transmitter by Industry Canada. To reduce potential radio interference to other users, the antenna type and its gain should be so chosen that the equivalent isotropically radiated power (e.i.r.p.) is not more than that necessary for successful communication.
En vertu des règlements d'Industrie Canada, cet émetteur radio ne peut fonctionner avec une antenne d'un type et un maximum (ou moins) approuvés pour gagner de l'émetteur par Industrie Canada. Pour réduire le risque d'interférence aux autres utilisateurs, le type d'antenne et son gain doivent être choisies de façon que la puissance isotrope rayonnée équivalente (PIRE) ne dépasse pas ce qui est nécessaire pour une communication réussie.

Section 7.1.3 of RSS-GEN This Device complies with Industry Canada License-exempt RSS standard(s). Operation is subject to the following two conditions: 1) this device may not cause interference, and 2) this device must accept any interference, including interference that may cause undesired operation of the device.
Cet appareil est conforme avec Industrie Canada RSS standard exemptes de licence(s). Son fonctionnement est soumis aux deux conditions suivantes: 1) ce dispositif ne peut causer des interférences, et 2) cet appareil doit accepter toute interférence, y compris les interférences qui peuvent causer un mauvais fonctionnement du dispositif.

This radio transmitter 6982A-YRHCPZW0FM has been approved by Industry Canada to operate with the antenna types listed below with the maximum permissible gain indicated. Antenna types not included in this list, having a gain greater than the maximum gain indicated for that type, are strictly prohibited for use with this device.

Le présent émetteur radio 6982A-YRHCPZW0FM a été approuvé par Industrie Canada pour fonctionner avec les types d'antenne énumérés ci-dessous et ayant un gain admissible maximal. Les types d'antenne non inclus dans cette liste, et dont le gain est supérieur au gain maximal indiqué, sont strictement interdits pour l'exploitation de l'émetteur.

CAN ICES-3B/NMB-3B

Yale Home

24/7 Tech Support : 1-855-492-0505 • www.US.YaleHome.com

Yale® is a registered trademark of Yale Home. Other products' brand names may be trademarks or registered trademarks of their respective owners and are mentioned for reference purposes only. © Copyright 2020. All rights reserved. Reproduction in whole or in part without the express written permission of Yale Home is prohibited.

nex**Touch**™ Keypad Access Sectional Mortise Lock
Touchscreen and Push Button
Installation and Programming Instructions

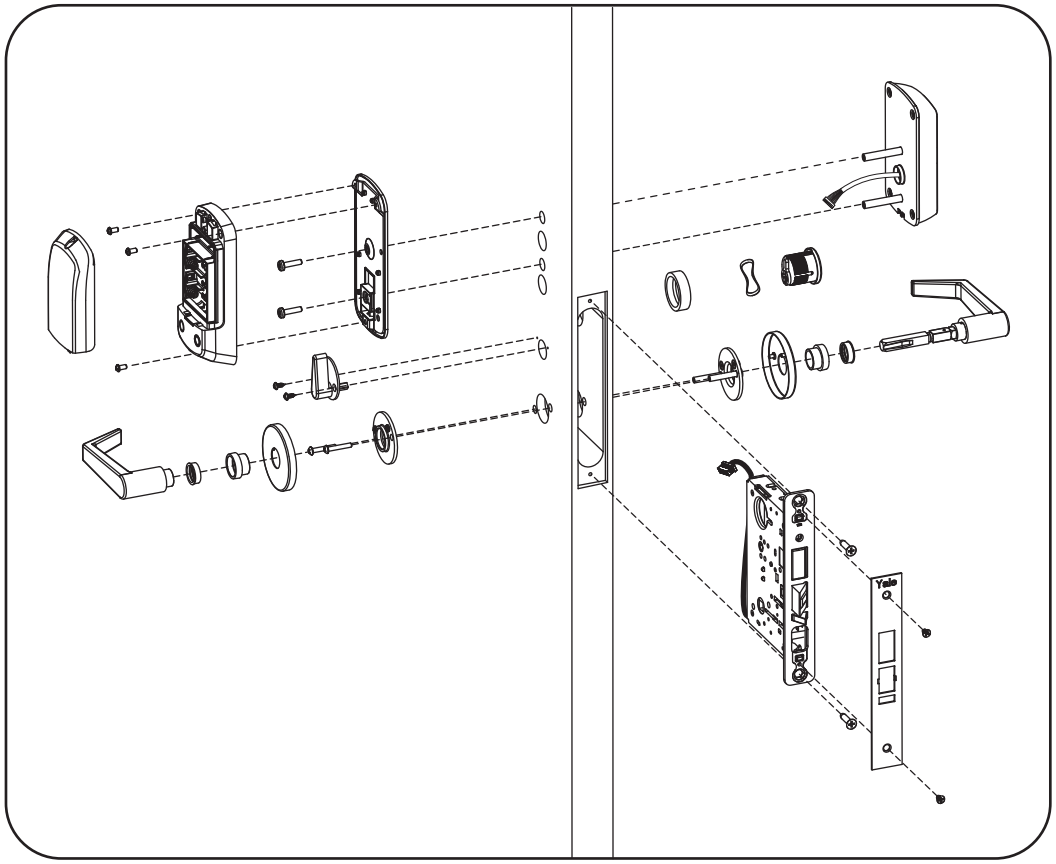

WARNING

This product can expose you to lead which is known to the state of California to cause cancer and birth defects or other reproductiveharm.For more information go to www.P65warnings.ca.gov.

08/2018

Retrofitting or modifying this product may impact fire rating, safety features and warranty. Consult with code specifications to ensure compliance with all codes and ratings.

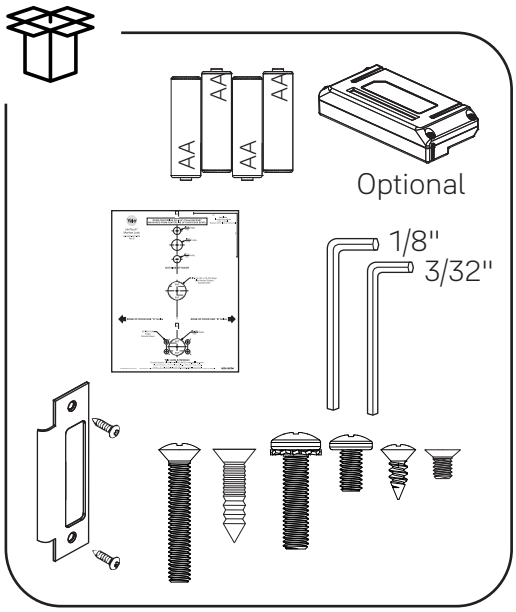

Determine Handing

The hand of a door is determined from the secure side of the door. The term "secure" means the side from which you unlock and enter.

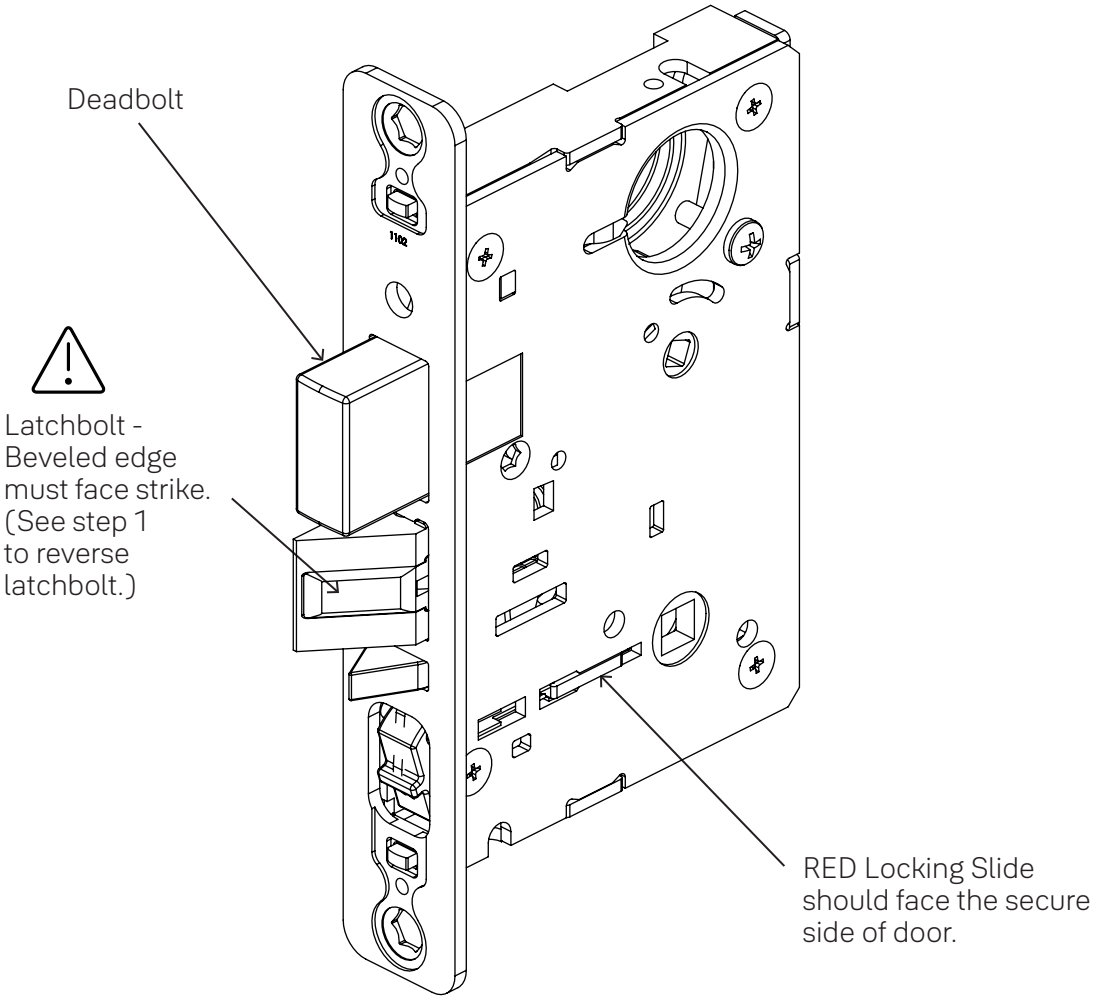

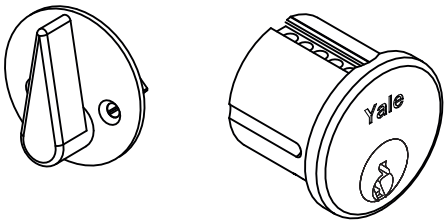

Key cylinder used for cylinder option installation. Thumbturn used when mortise lock is equipped with deadbolt.

1 Hand Latchbolt & Hubs (If Necessary)

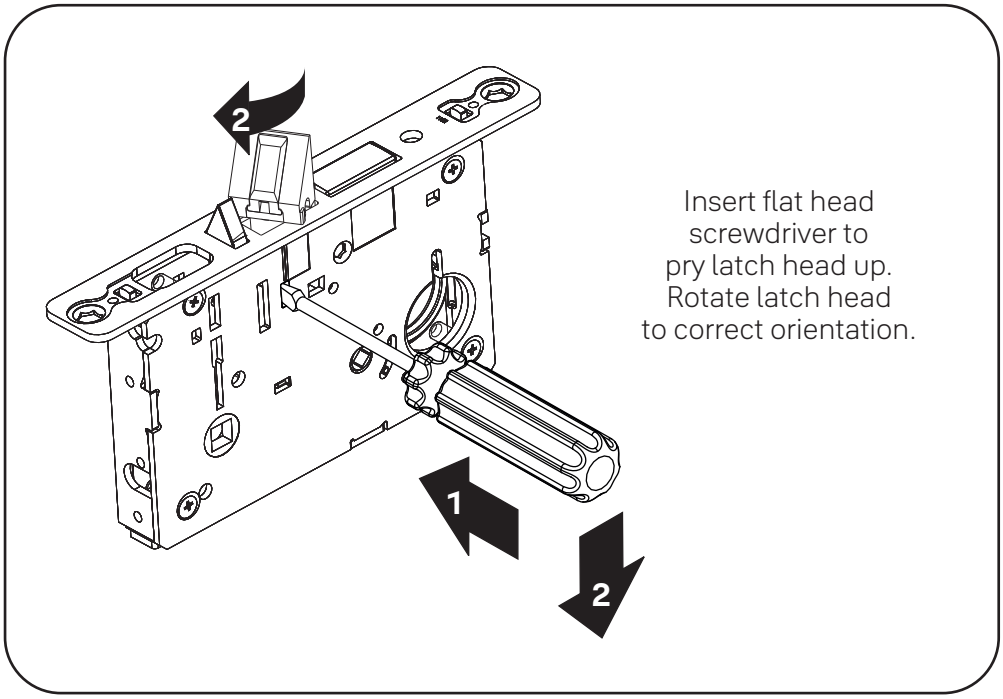

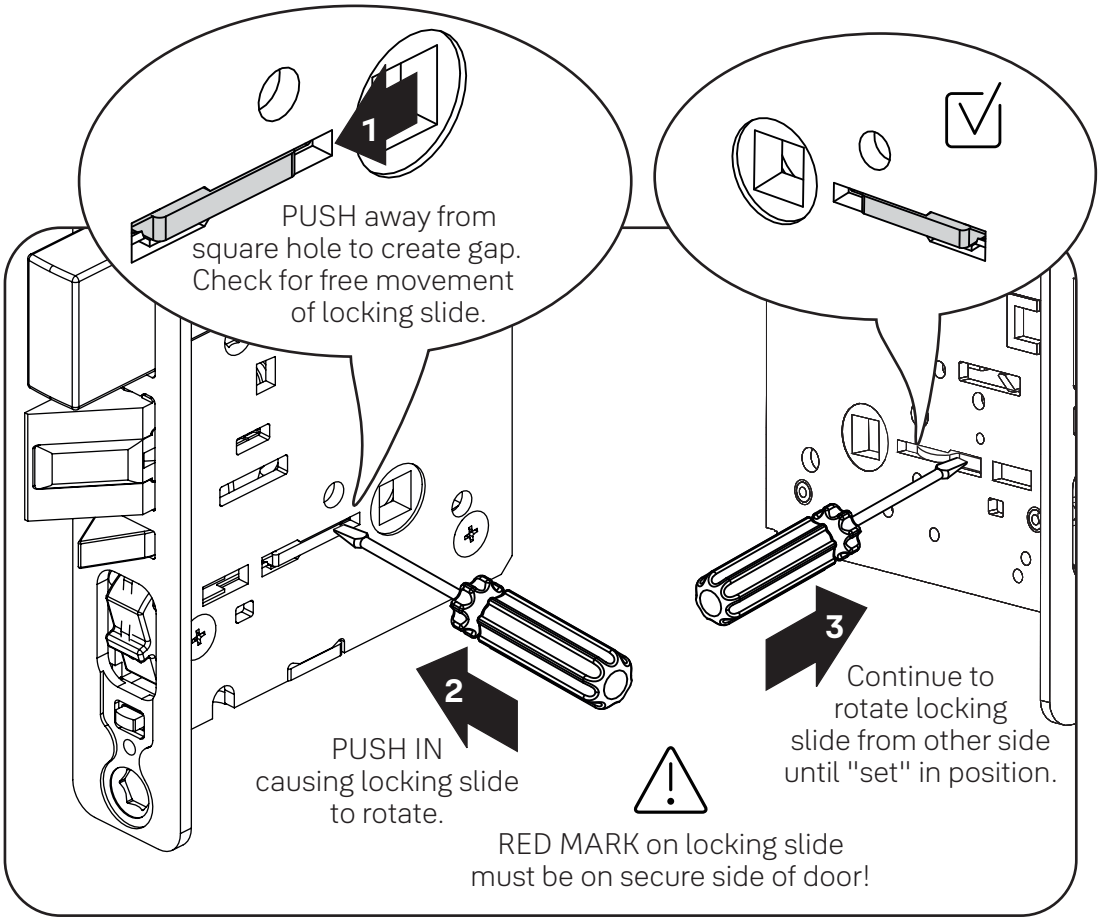

2 Prepare Door

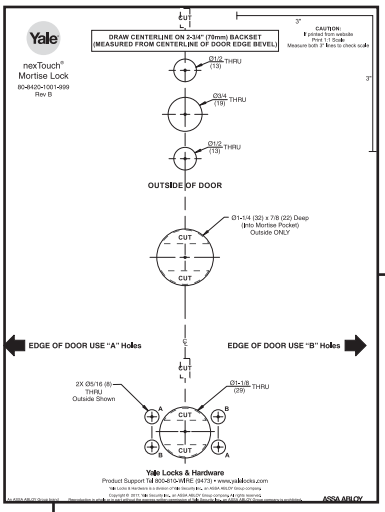

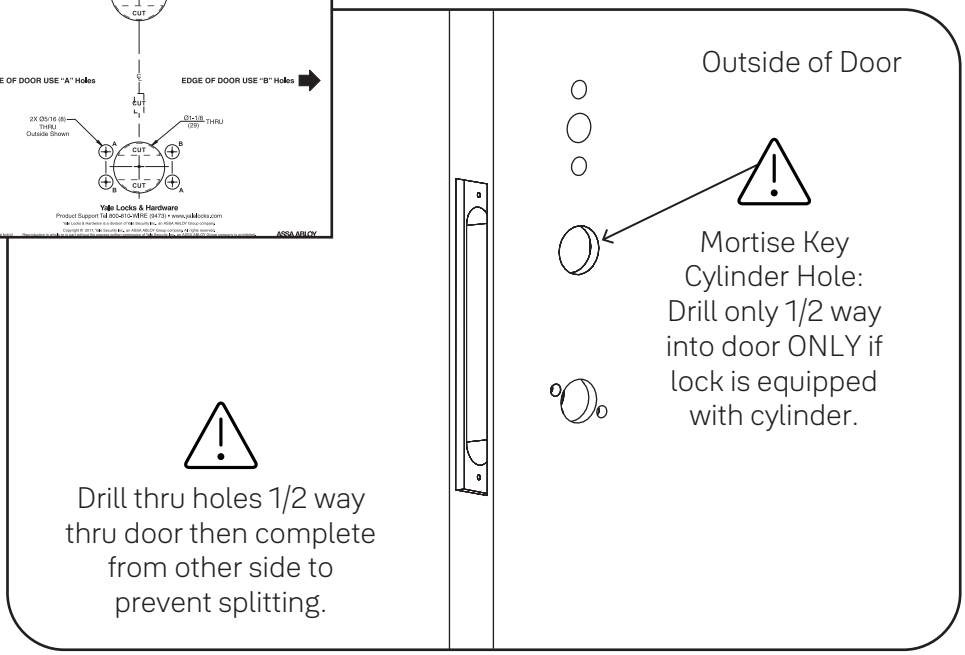

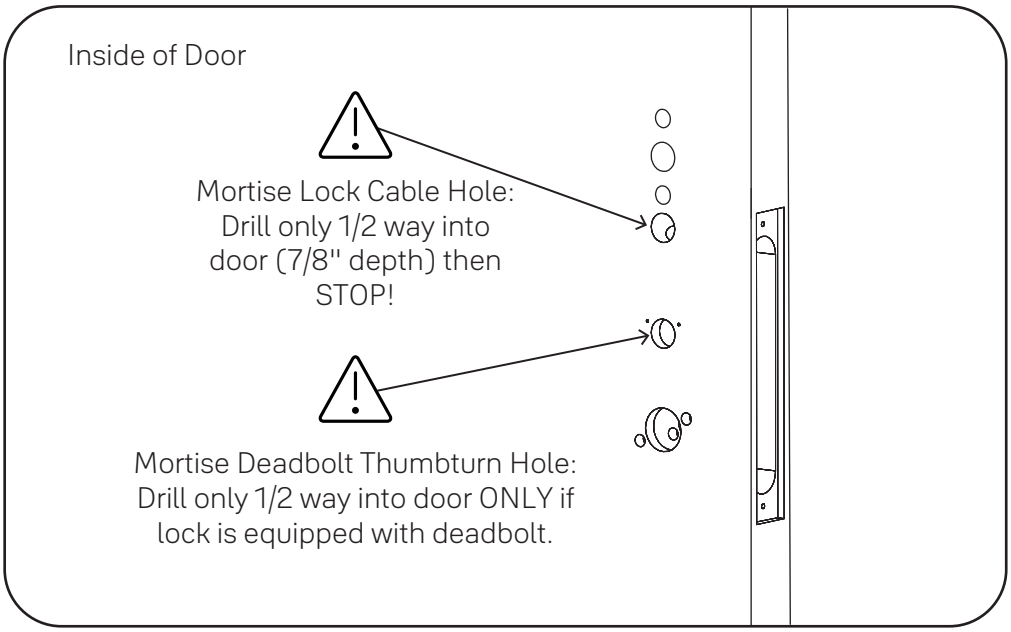

3 Prepare Frame & Install Strike

#12-24x1" Flat Head Combo Screw

x2

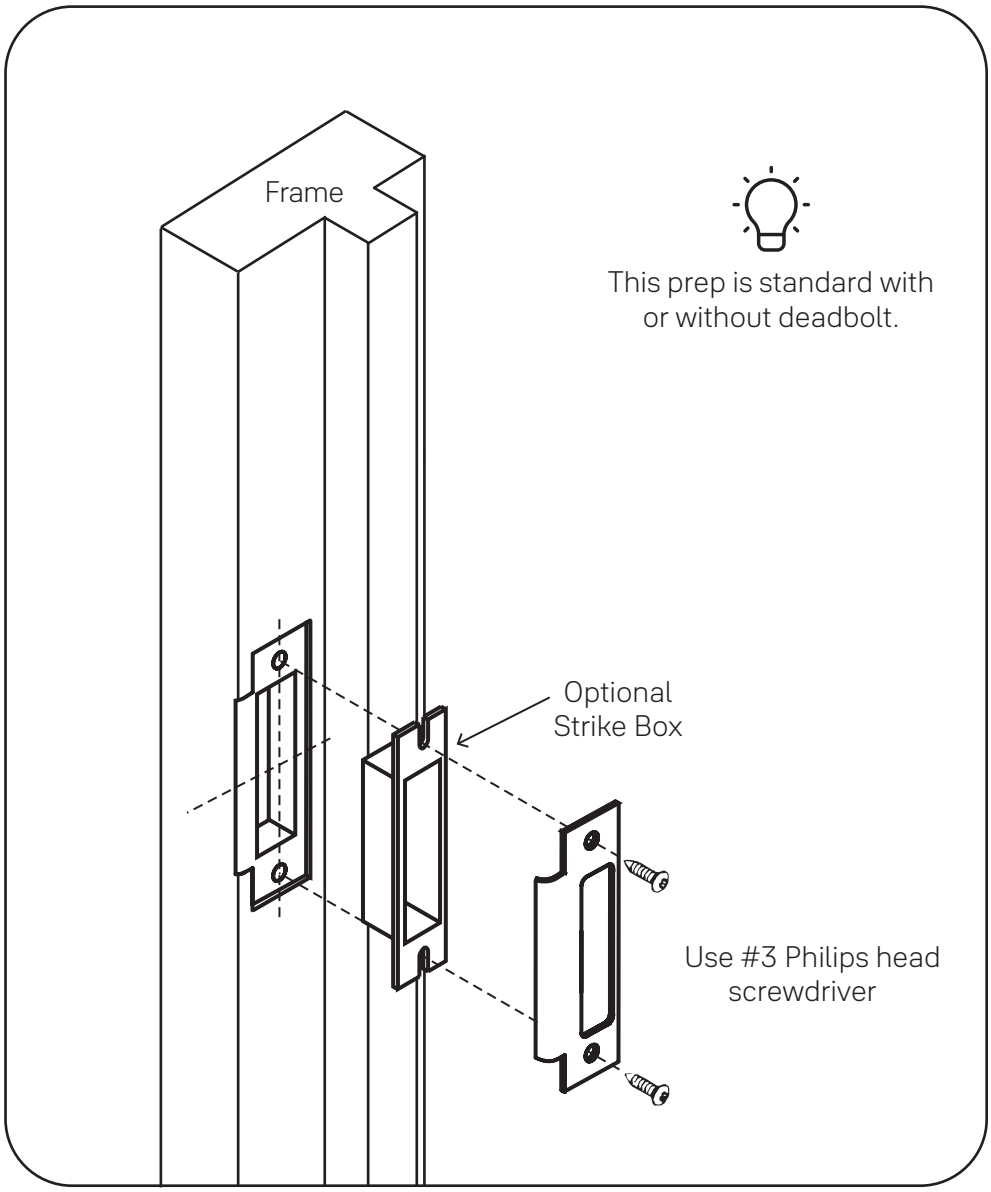

4 Install Mortise Lock

#12-24x1" Flat Head Combo Screw

x2

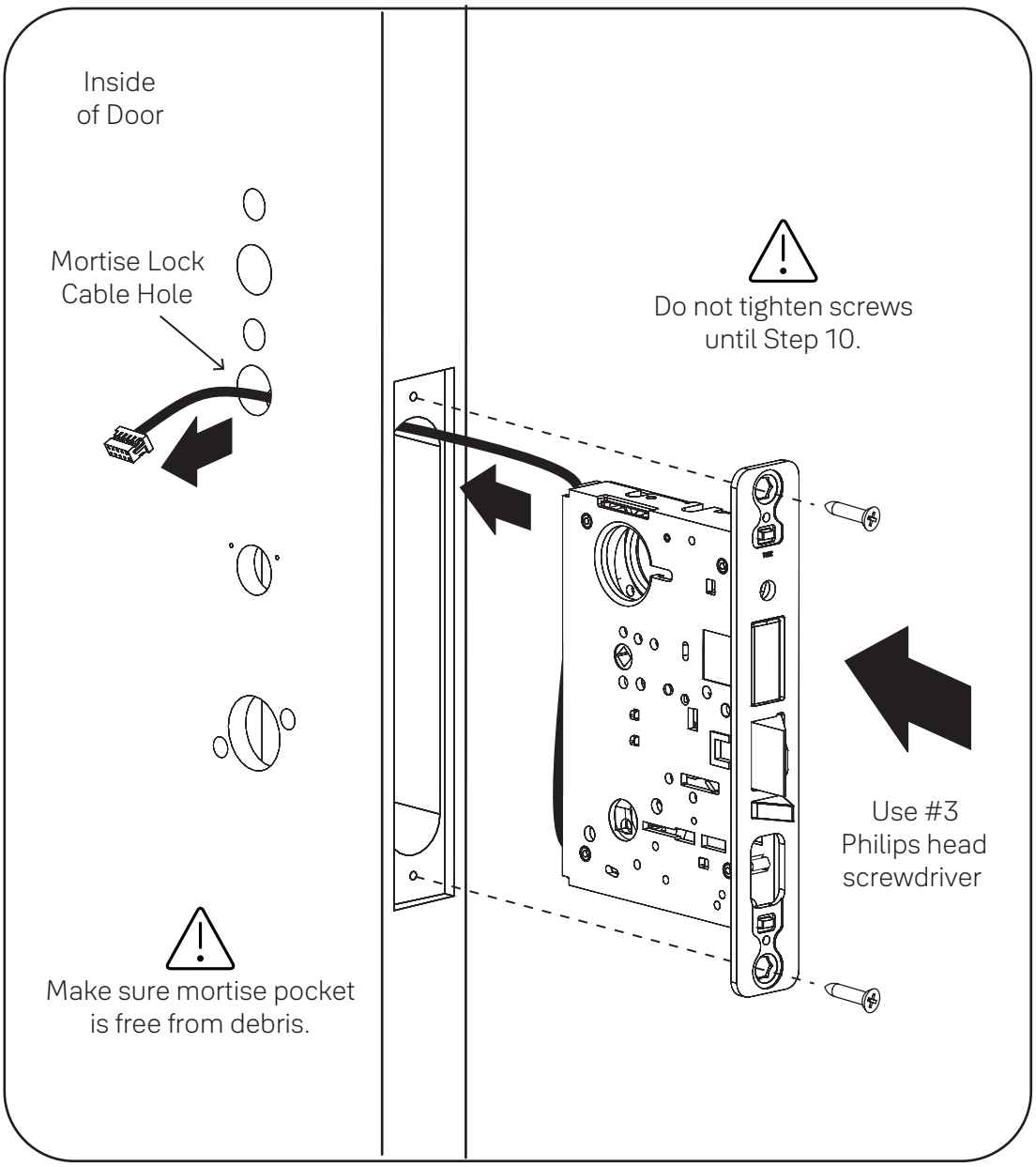

5 Install Key Cylinder (if applicable) For Cylinder Option ONLY

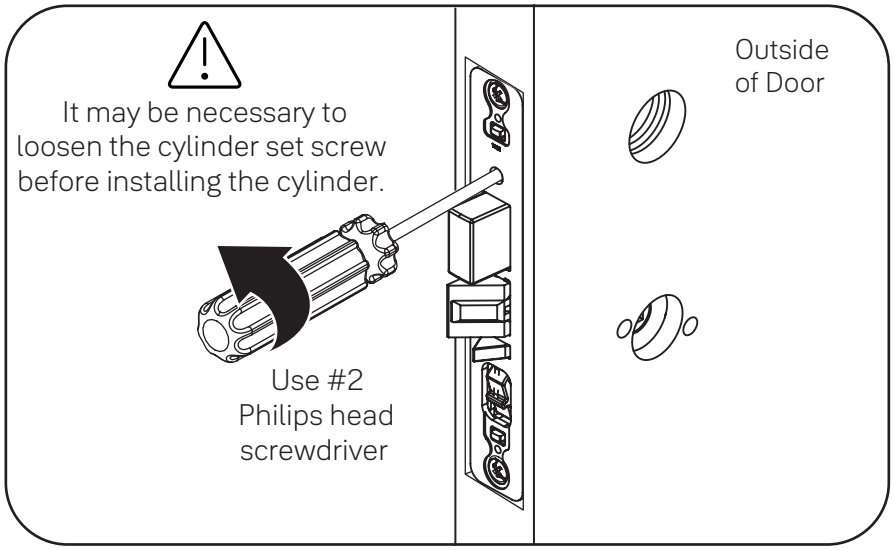

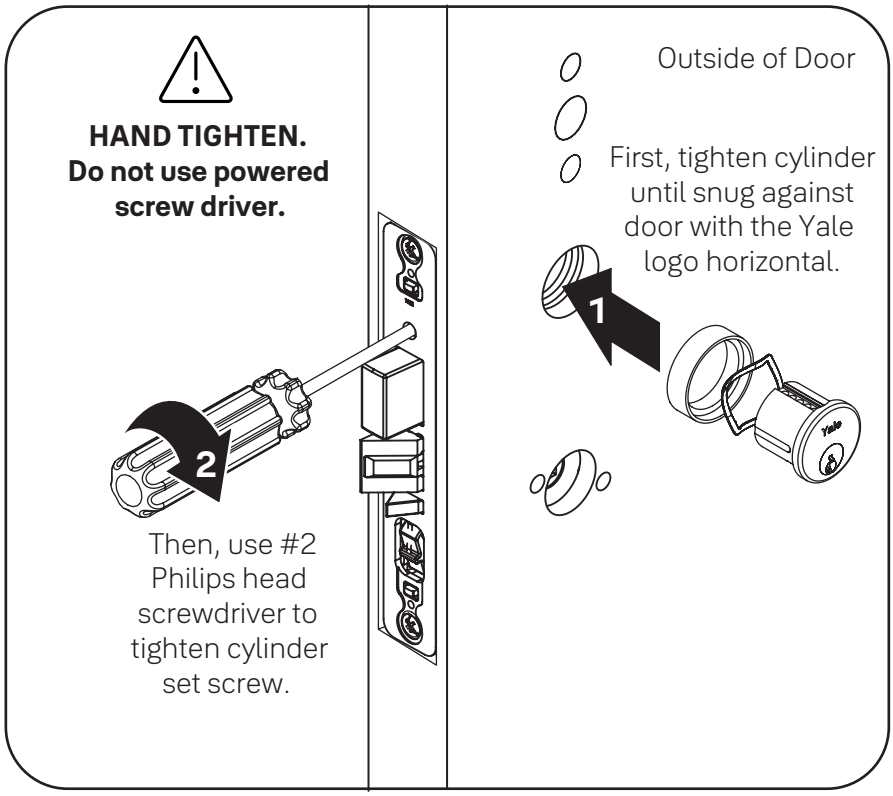

Test Operation

6 Install Rose Trim - all types

x2

#8-32x1"
Pan Head Screw
with Thread Locker
(For 1-3/4" Door)

Adjusting for 1-3/4" to 2-1/4" Door (if necessary)

Use screw pack for thicker door at this step.
Use appropriate fastener lengths to ensure proper installation.

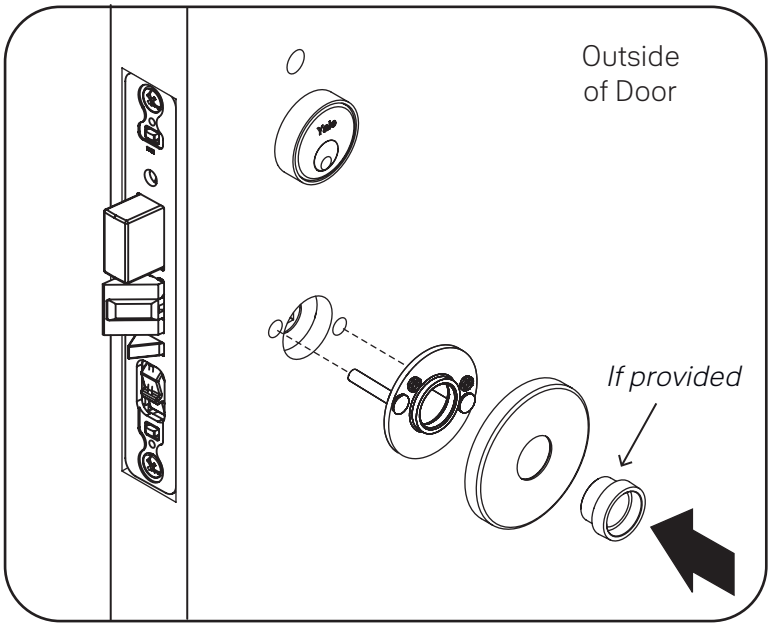

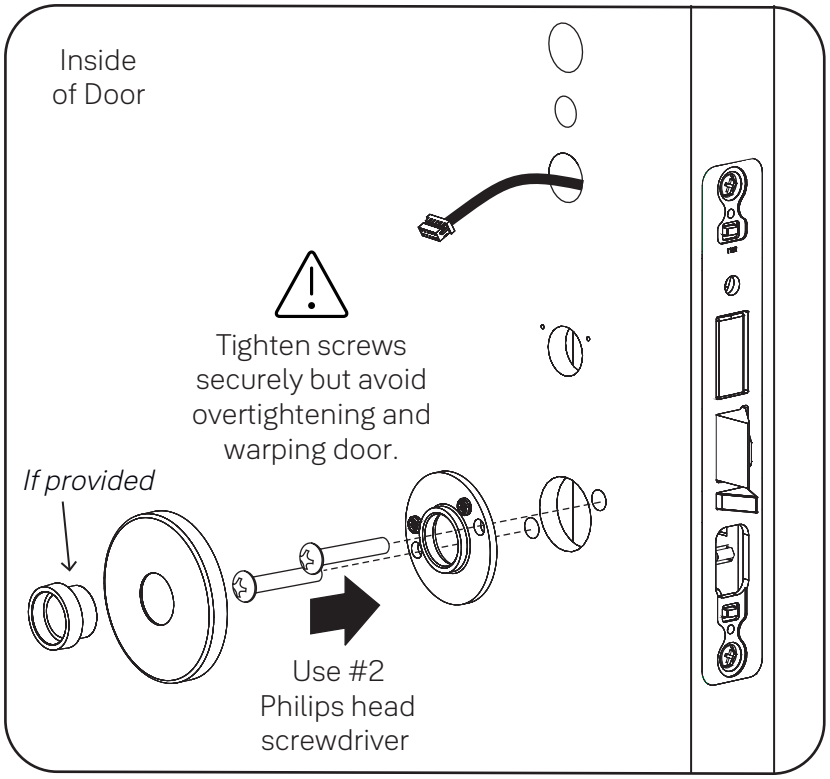

7 Prepare Levers

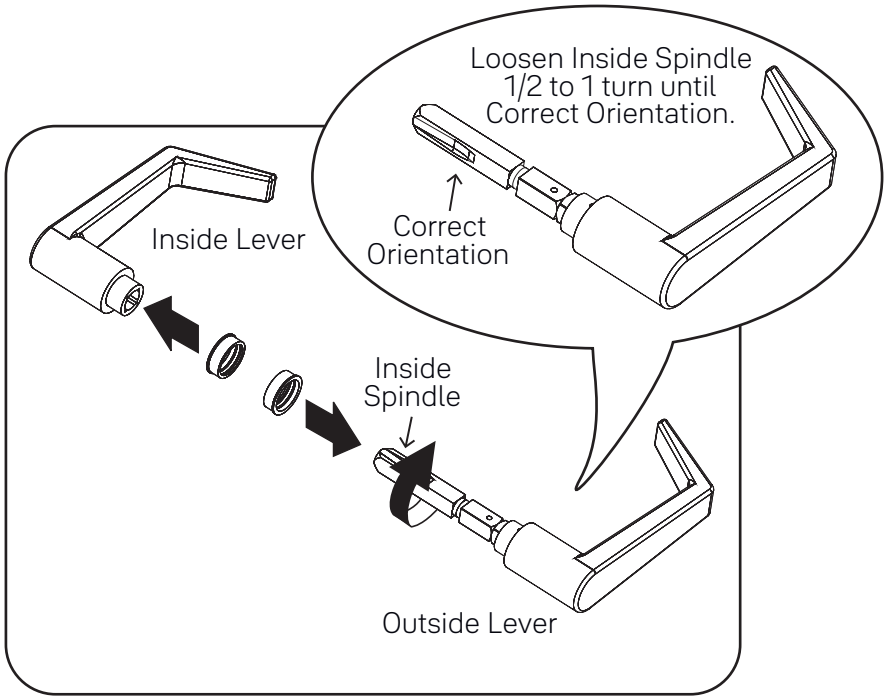

8 Install Levers

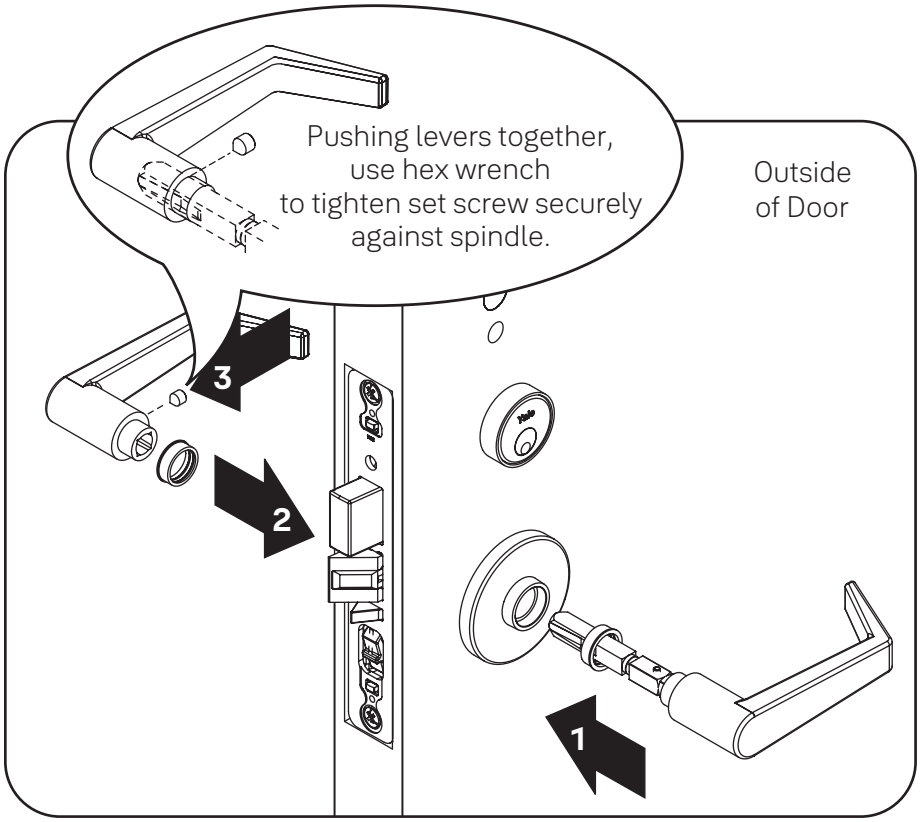

9 Install Thumbturn (if applicable) For Deadbolt Option ONLY

#6x3/8" Oval Head Screw

x2

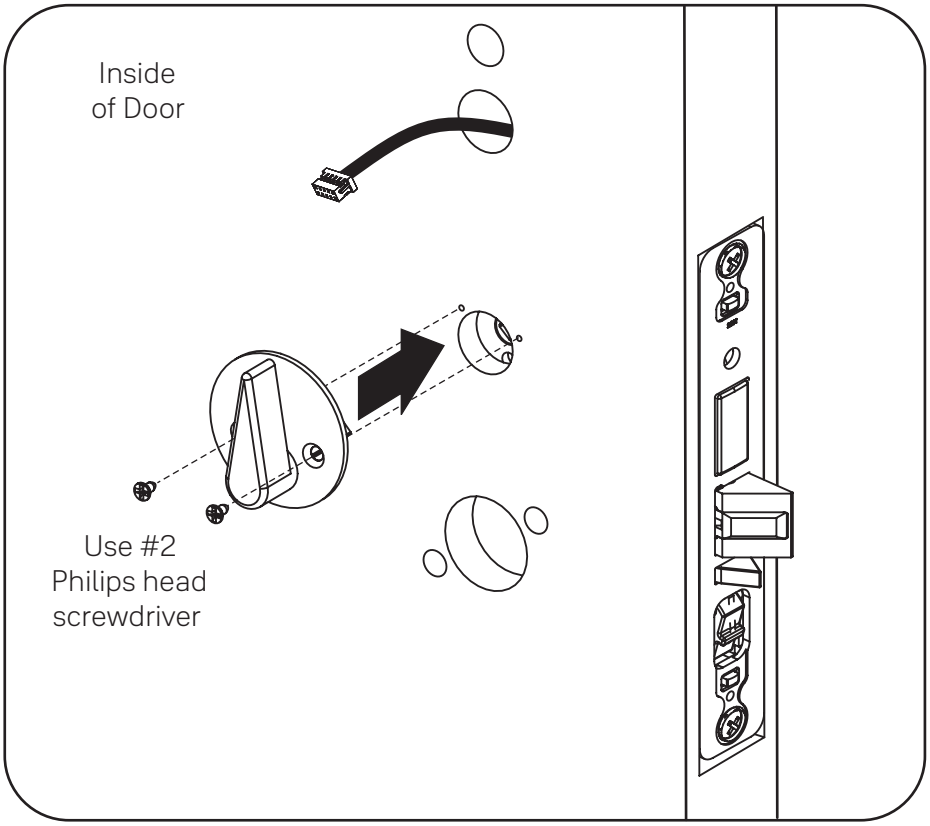

Test Operation

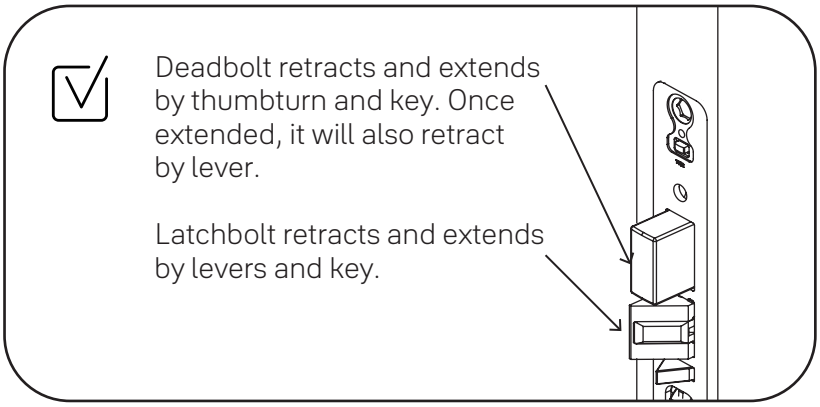

10 Install Armor Front

8x32-1/4" Flat Head Screw

x2

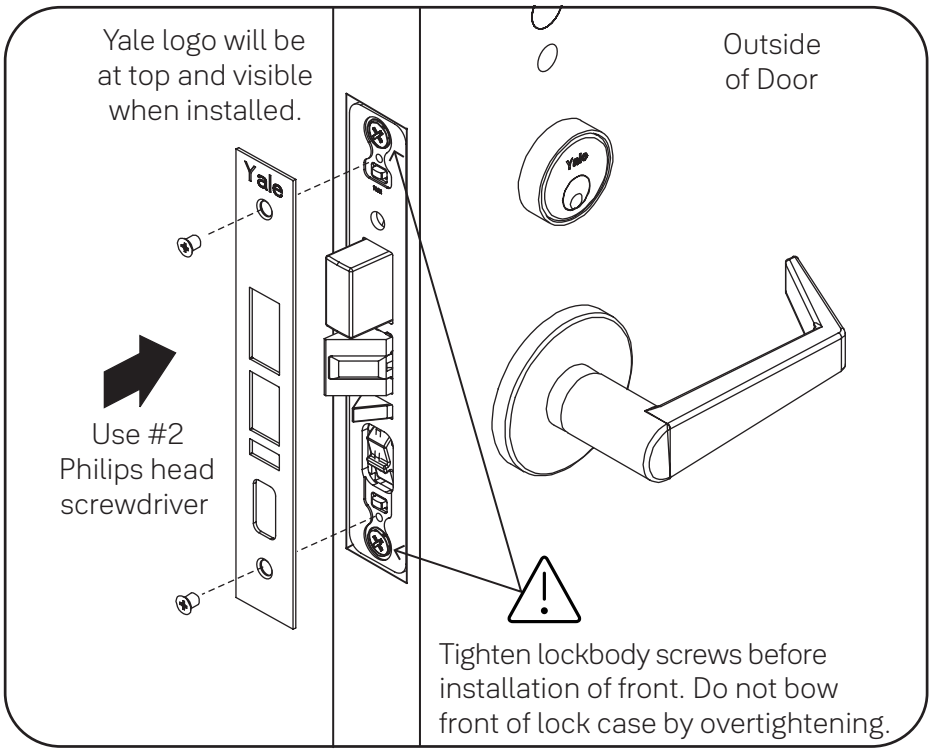

Test Operation Again

11 Install Keypad

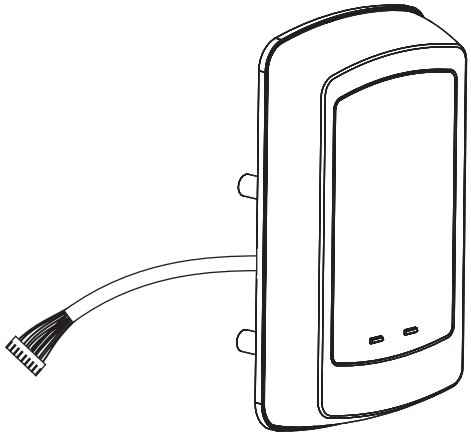

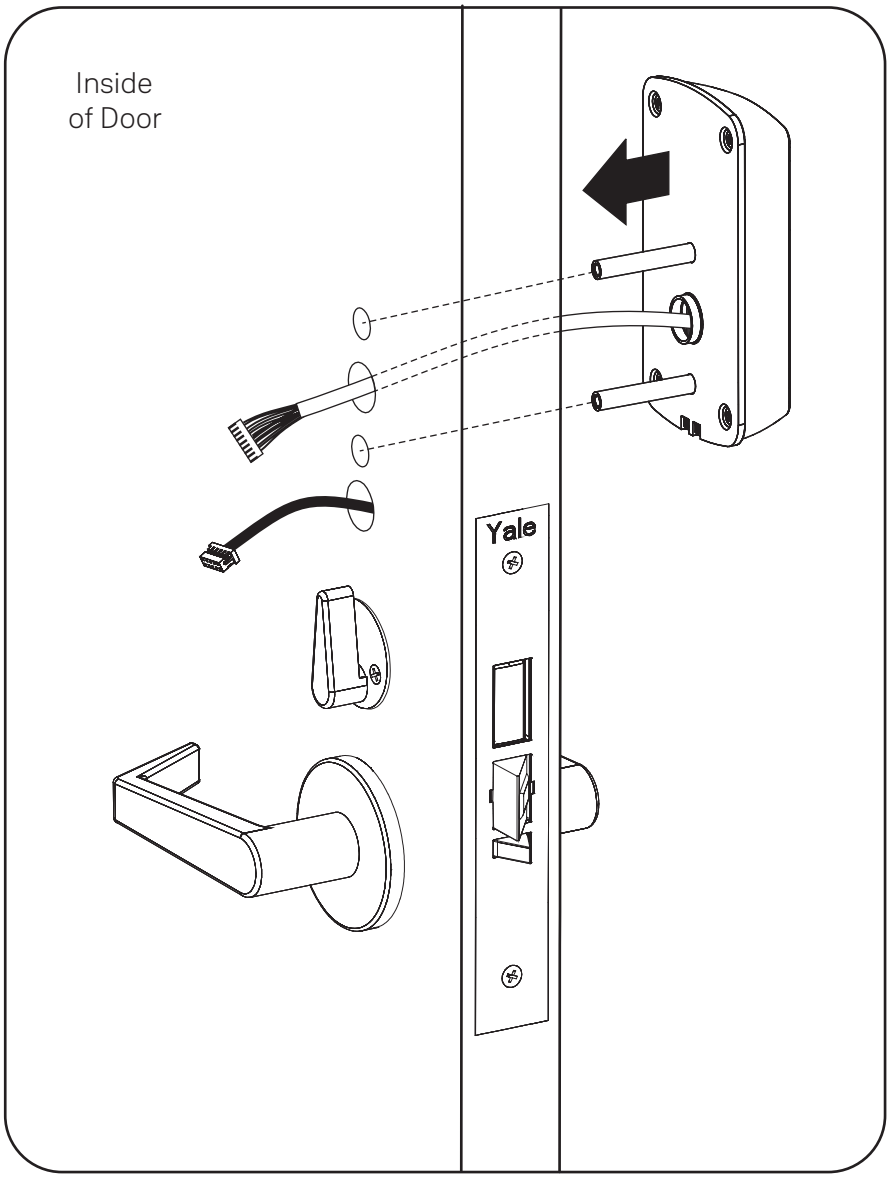

12 Install Inside Mounting Plate

#10-32x3/4" Pan Head Screw with Washer
(For 1-3/4" Door)

x2

Choose fasteners appropriate for your door thickness.

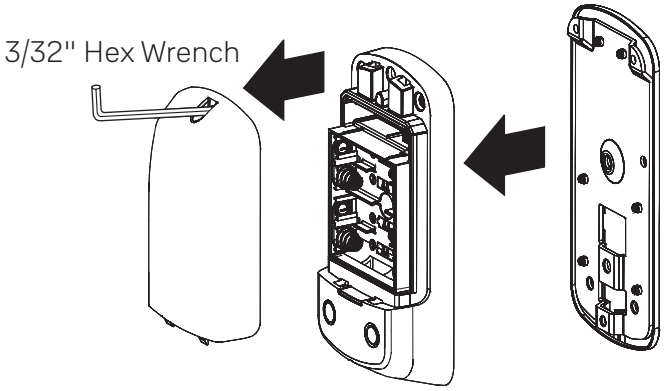

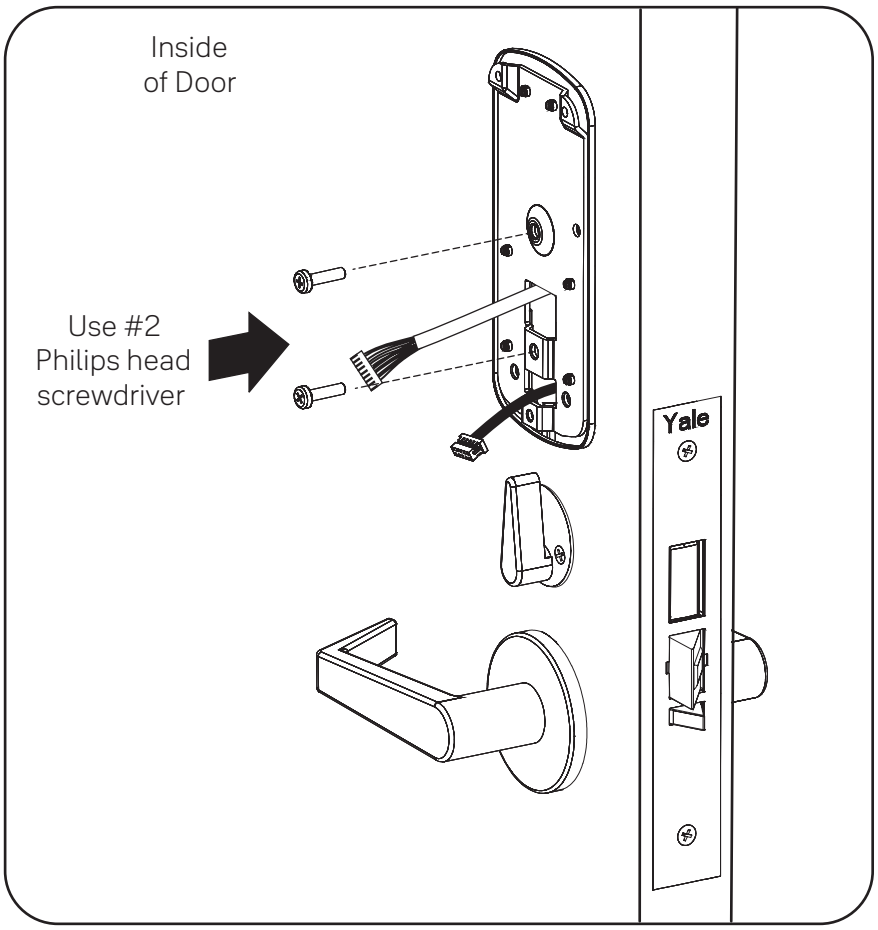

13 Attach Cables to Inside Lock

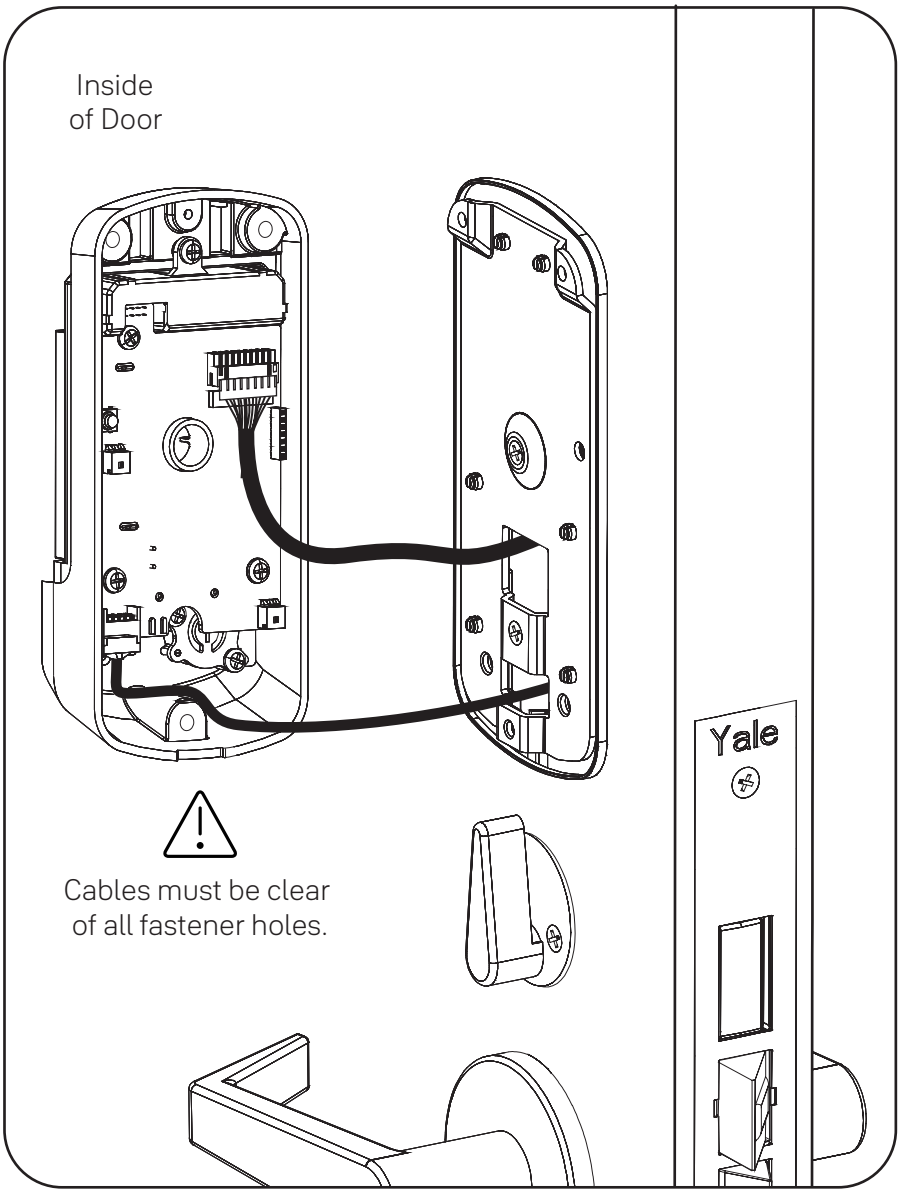

14 Install Inside Lock

#8-32x3/8" Pan Head Screw (Black)

x3

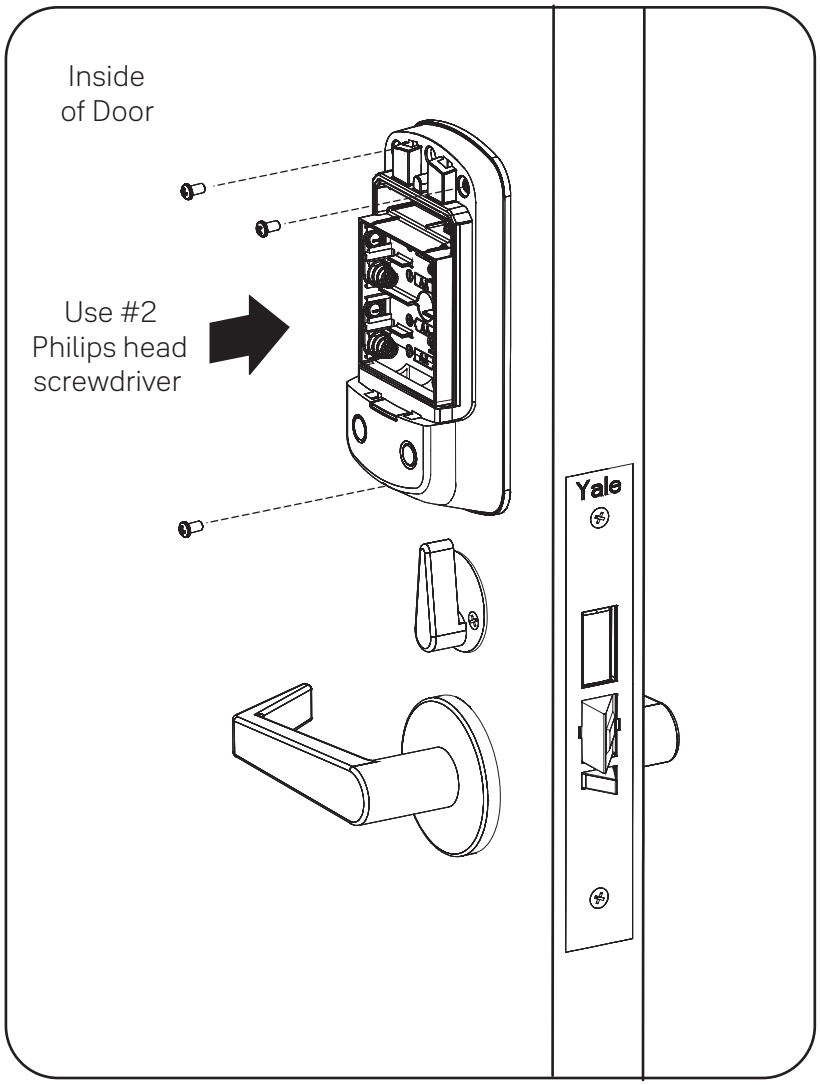

15 Install Batteries & Cover

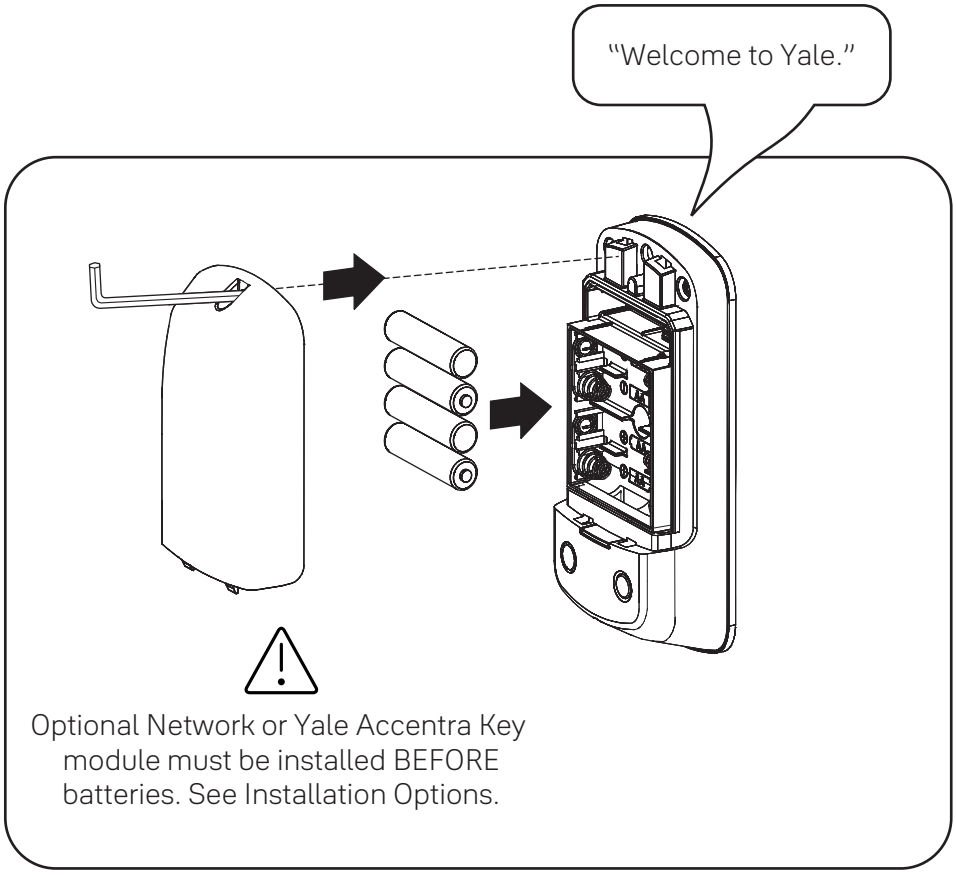

Congratulations, you've installed the
Yale nex**Touch**™ Keypad Access Sectional Mortise Lock!
Continue to customize your product.

0 optional Installation Options

Network or Yale Accentra Key Module

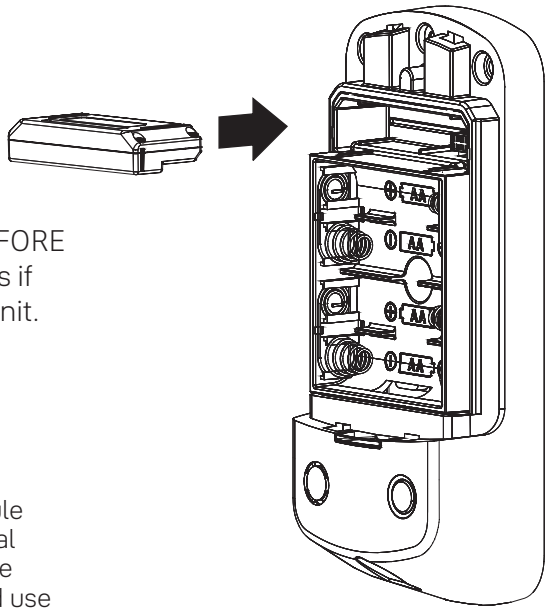

Module must be installed BEFORE batteries. Remove batteries if adding module to existing unit.

The Yale Accentra Key module enables access with physical (cards and fobs) and mobile credentials ONLY. Creation and use of User PIN codes are disabled.

Programming Instructions

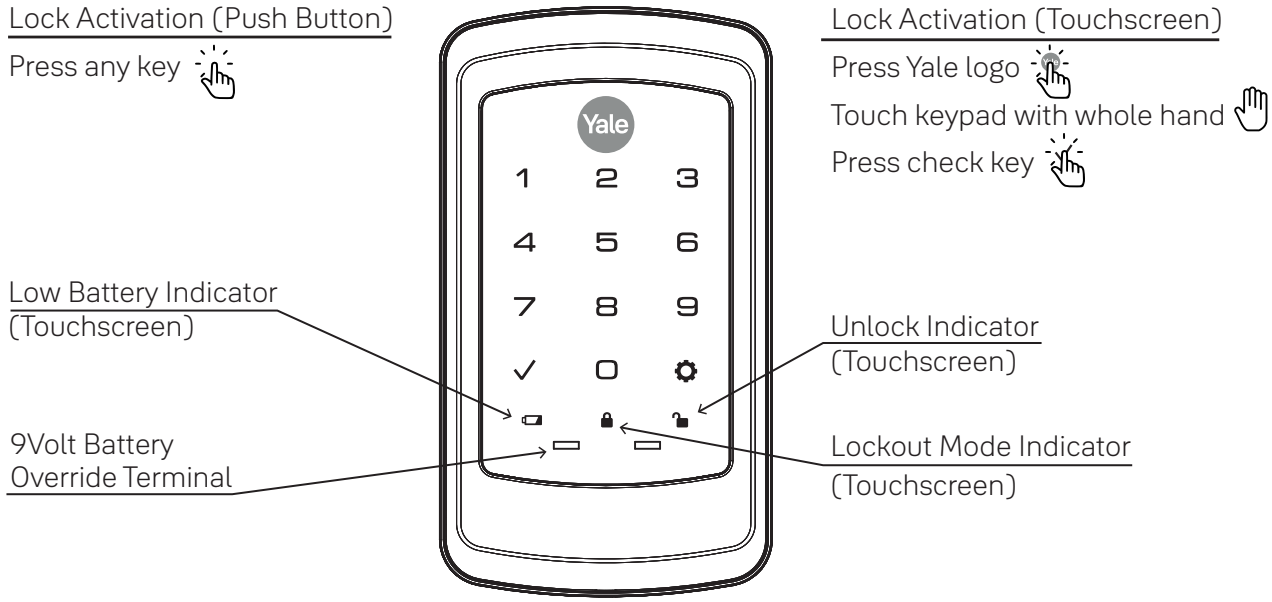

Keypad

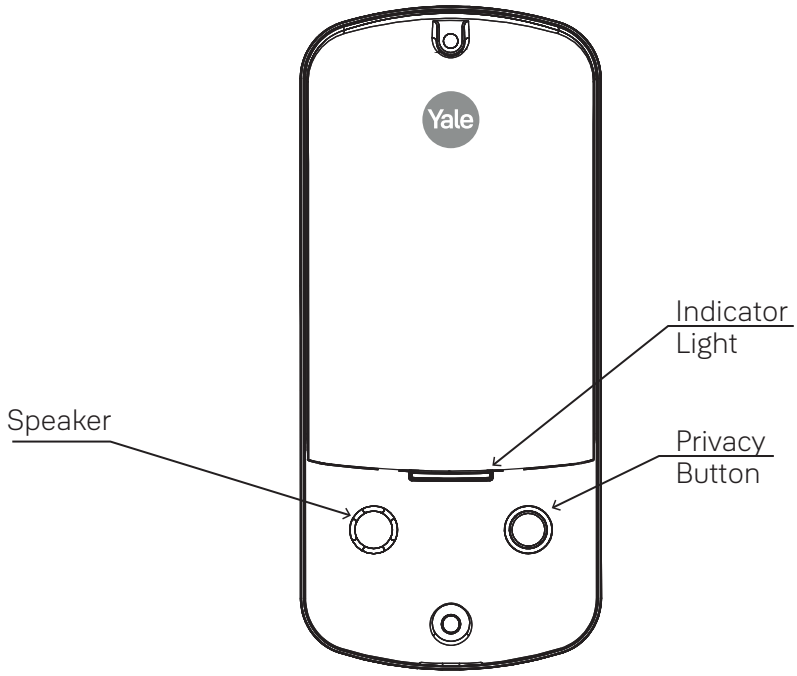

Inside Lock

1 Creating Master PIN Code

Creating a Master PIN Code must be performed upon installation or after resetting the lock to factory default. Programming and use of lock is not possible until this step has been successfully completed.

Activate Lock

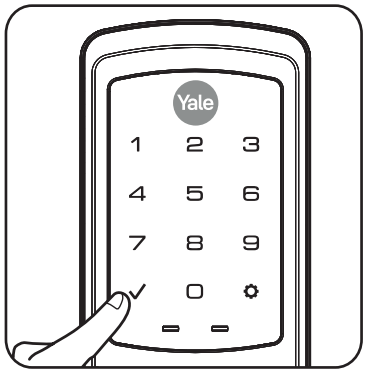

Press ⚙

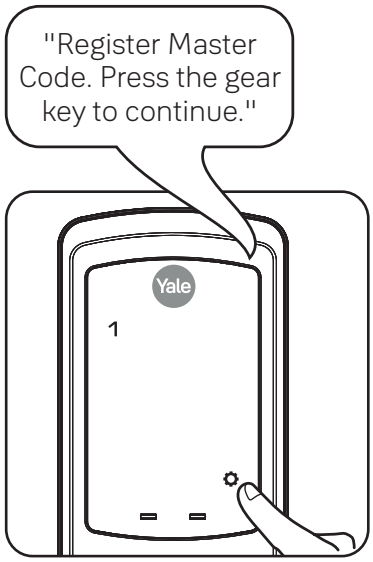

Enter 4-8 digit Master PIN Code.

Press ⚙

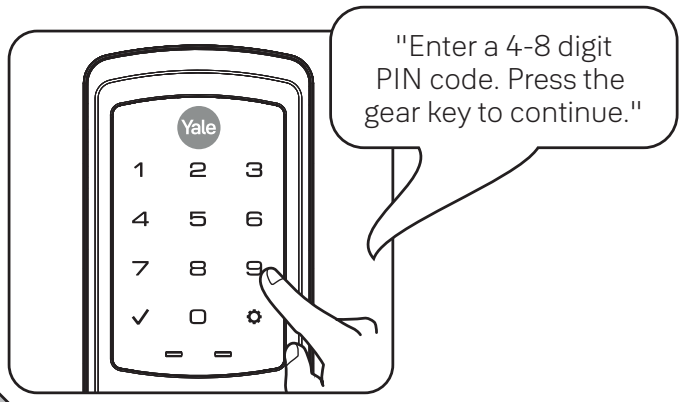

Deadbolt Installed:
Press 1

No Deadbolt:
Press 3

Press ⚙

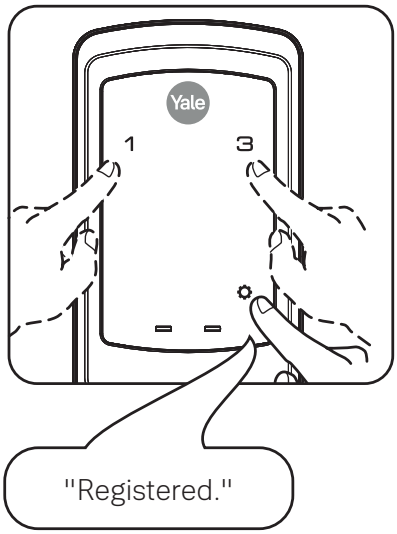

Press ✓

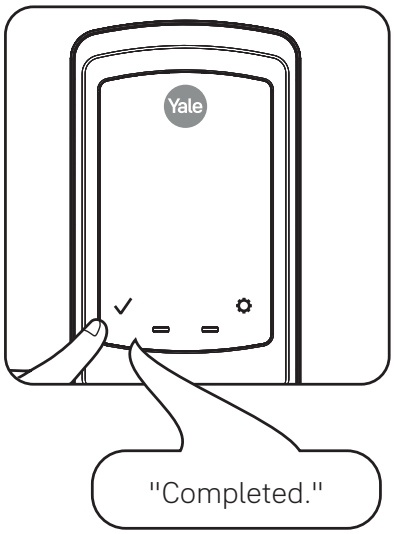

2a Creating User PIN Codes

Master PIN code must be created first.
*Max User Codes = 100 without Network Module / 500 with Network Module

The Yale Accentra Key module enables access with physical (cards and fobs) and mobile credentials ONLY. Creation and use of User PIN codes are disabled.

Activate Lock

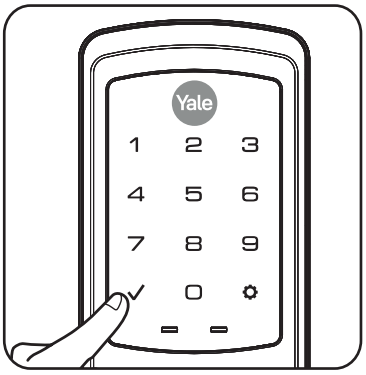

Enter Master PIN code

Press ⚙

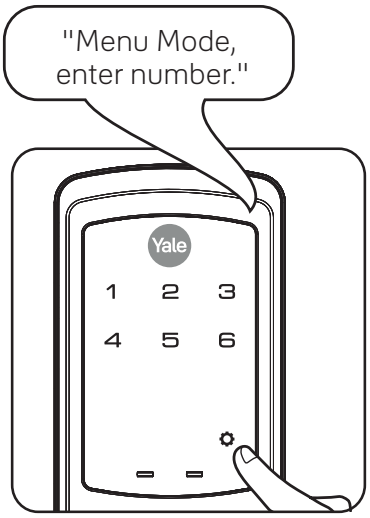

Press 2
Press ⚙

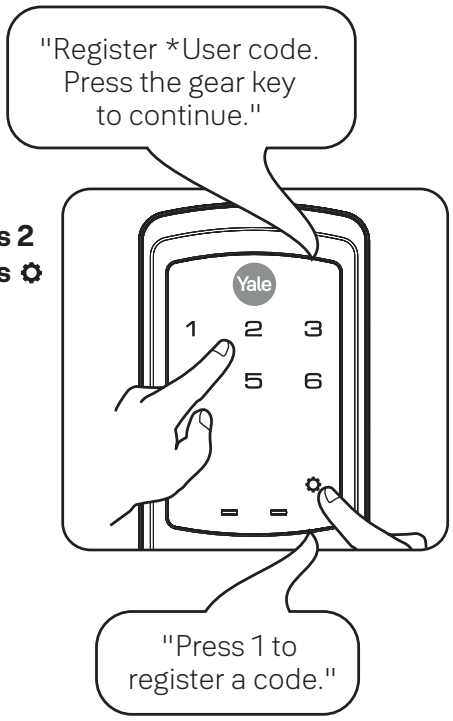

Press 1
Press ⚙

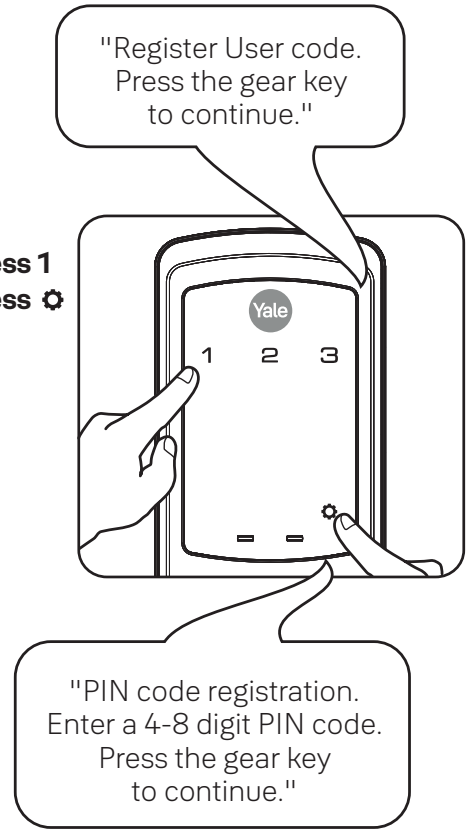

2b Creating User PIN Codes con't

Enter 4-8 digit PIN code followed by ⚙

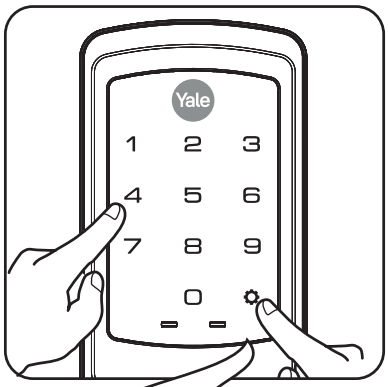

"Registered.
Press the check key to complete. Press the gear key to continue."

OR

Adding more User Codes:

Press ⚙
Enter 4-8 digit PIN code
Press ⚙

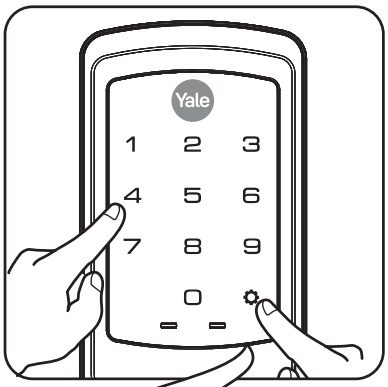

"Registered.
Press the check key to complete. Press the gear key to continue."

To end programming:

Press ✓

"Completed."

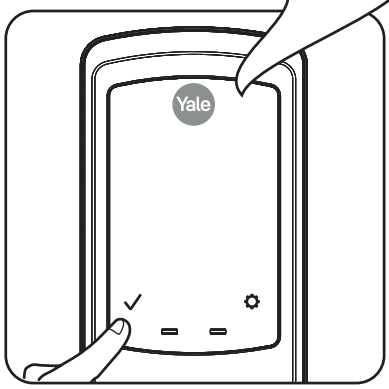

3 Locking & Unlocking Door with Registered Master or User PIN Code

The Yale Accentra Key module enables access with physical (cards and fobs) and mobile credentials ONLY. Creation and use of User PIN codes are disabled. Master PIN code is only used for programming and configuring lock with Yale Accentra Multi-Family configuration app and will not unlock door. When lock is configured into Accentra, "#2" and "#6" will no longer be visible when in "menu" mode.

With One Touch Locking Enabled:

Activate Lock

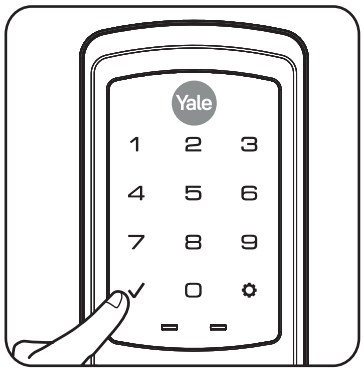

OR

Enter PIN Code

Press ✓

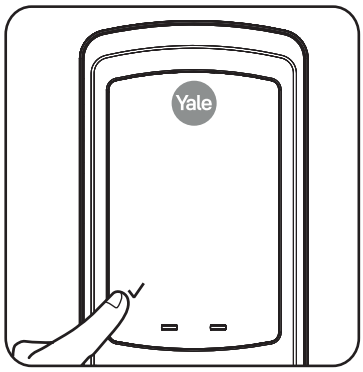

4 Locking Door with Privacy Button

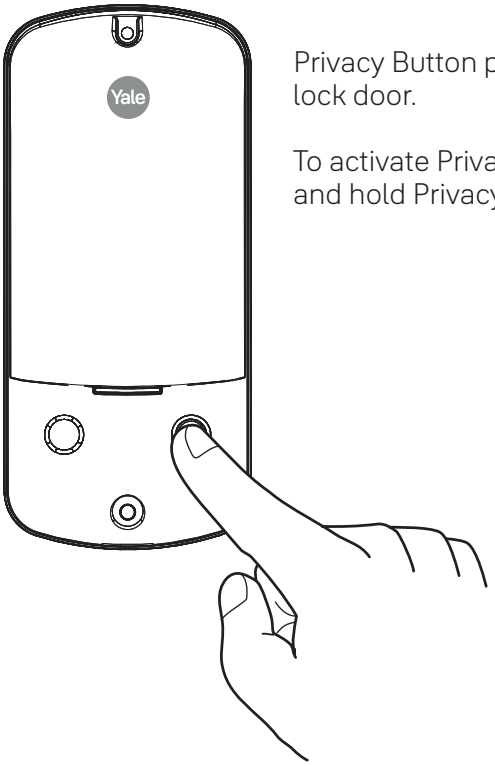

Privacy Button pressed once will lock door.

To activate Privacy Mode, press and hold Privacy Button.

Resetting Lock to Factory Default

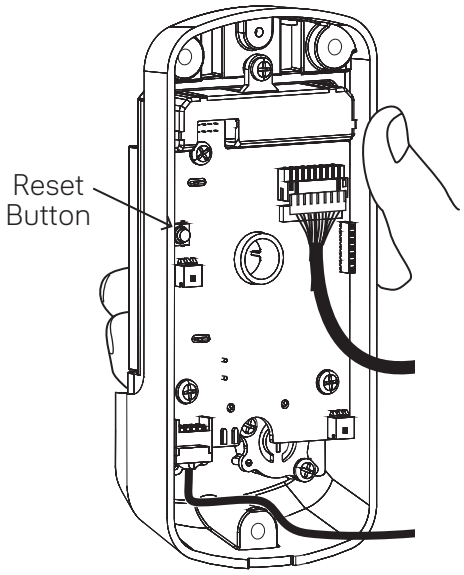

Inside Lock

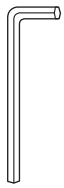

Hex Wrench

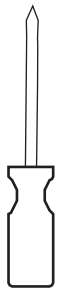

#2 Philips Head
Screwdriver

When lock is reset to factory defaults all user codes (including the Master PIN code*) are deleted and all programming features are reset to original default settings (see Factory Settings).

"Please use this procedure only when the network primary controller is missing or otherwise inoperable."

IMPORTANT: The Reset Button is on the Inside Lock.
The keypad remains assembled.

1. Remove the battery cover with supplied hex wrench and then remove batteries.
2. Remove network module if installed.
3. Using a #2 Philips head screwdriver, remove the inside lock from the door to access the reset button on back of lock. Cables may stay connected. (See illustration at above for location of the reset button.)
4. Reinstall four (4) AA batteries.
5. Press and hold the reset button for 3 seconds.
6. While continuing to press the reset button, temporarily remove one (1) AA battery.
7. Reinstall the battery.
8. Release reset button and wait approximately 15 seconds. Speaker will announce "Welcome to Yale."
9. Reassemble inside lock.
10. If utilizing a network module, remove batteries. Insert Module. Reinstall batteries.

Upon reset, Master PIN Code creation is the only option available and must be performed prior to any other programming of the lock.

Definitions

All Code Lockout Mode: This feature is enabled by the Master PIN code. When enabled, it restricts all user (except Master) PIN code access. When attempting to enter a code while unit is in Lockout, there will be an audible lock response. The touchscreen keypad will display a RED locked padlock. (Main Menu selection #6.)

Automatic Re-lock Time: After a successful unlock, the unit will re-lock automatically after 3 seconds or for a duration selected in the Advanced Lock Settings (Main Menu selection #3 then #1).

Eco Mode: When enabled, Eco Mode puts unit in low power mode extending life of battery.

Escape Return: Enabling this function allows the door to remain unlocked in the case of an emergency. Escape Return will cause the door to automatically unlock upon opening and remain unlocked even if the door swings closed. The locking action requires at least one intentional user interaction to return to the locked state. Auto Re-lock cannot be enabled when Escape Return is enabled.

Inside Indicator Light: This light will blink red when door is locked.

Language Setting Mode: Choose English (1), Spanish (2) or French (3) for the lock's voice prompts. (Main Menu selection #5.)

Low Battery: When the battery power is low, the Low Battery Warning indicator is a flashing red battery icon on the touchscreen keypad and the Yale logo will flash red on the push button keypad. If battery power is completely lost, use the 9Volt battery override. To use the 9V battery override apply 9V battery, in either direction, to terminals on the keypad for backup power option. Activate the keypad and enter your pin code to unlock the door.

Master PIN Code: The Master PIN code is used for programming and for feature settings. It must be created prior to programming the lock. The Master code will also operate (unlock/lock) the lock except when configured to Accentra system.

Network Module Setting: With the optional Network Module installed, this setting becomes available (Main Menu selection #7 or #0 with Accentra Module) and allows the lock to connect with a network controller.

One Touch Locking: When the unit is unlocked, activating the keypad will lock the unit (during Automatic Re-lock duration or when Automatic Re-lock is disabled). When One-Touch Re-lock is not in use (disabled), any valid PIN code will re-lock the lock. (Main Menu selection #3 then #3.)

Passage PIN Code: When used to unlock, lock will remain unlocked/open. Lock cannot be locked/secured until Passage code is entered again.

Privacy Button to Lock Door: A press of this button will lock the door.

Privacy Mode: All keypad functions can be disabled with a press of the Privacy Button. Privacy Mode is disabled by default. Enable Privacy Mode thru Main Menu selection #3 then #4. With Privacy Mode enabled thru Menu Mode and door closed, extend deadbolt to engage Privacy Mode. If there is no deadbolt, press and hold the privacy button until voice prompt indicates Privacy Mode is engaged. Privacy Mode duration ends when door is opened and voice prompt indicates Privacy Mode is disabled.

Shut Down Time: The unit will shut down for sixty (60) seconds and not allow operation after the wrong code entry limit (5 attempts) has been met. When the unit is in Shut down, the keypad will be flashing.

Tamper Alert: Audible alarm sounds if attempting to forcibly remove outside lock from door.

User PIN Code: The User code operates the lock. Maximum number of user codes is 500.

Volume Setting Mode: The volume setting for PIN code verification is set to HIGH (1) by default; otherwise it can be set to Low (2) or Silent (3) for quiet areas. (Main Menu selection #4.)

Wrong Code Entry Limit: After five (5) unsuccessful attempts at entering a valid PIN code, the lock will not accept a PIN code for the duration of the shut down time. The touchscreen keypad will flash, and a red lock symbol will be at the bottom of the keypad. The push button keypad will flash and the Yale icon will flash blue for the shut down period. The

Feature Programming Through Menu Mode Using Master PIN code*

1. Activate the lock.
2. Enter 4-8 digit master PIN code* followed by ✿ key. Lock Response: "Menu mode, enter number (Enter digit corresponding to the function to be performed), press the ✿ key to continue."
3. Follow the voice commands.
4. Press ✓ key to complete the process and conclude the programming session.

*The Master PIN code must be created prior to any other programming of the lock.

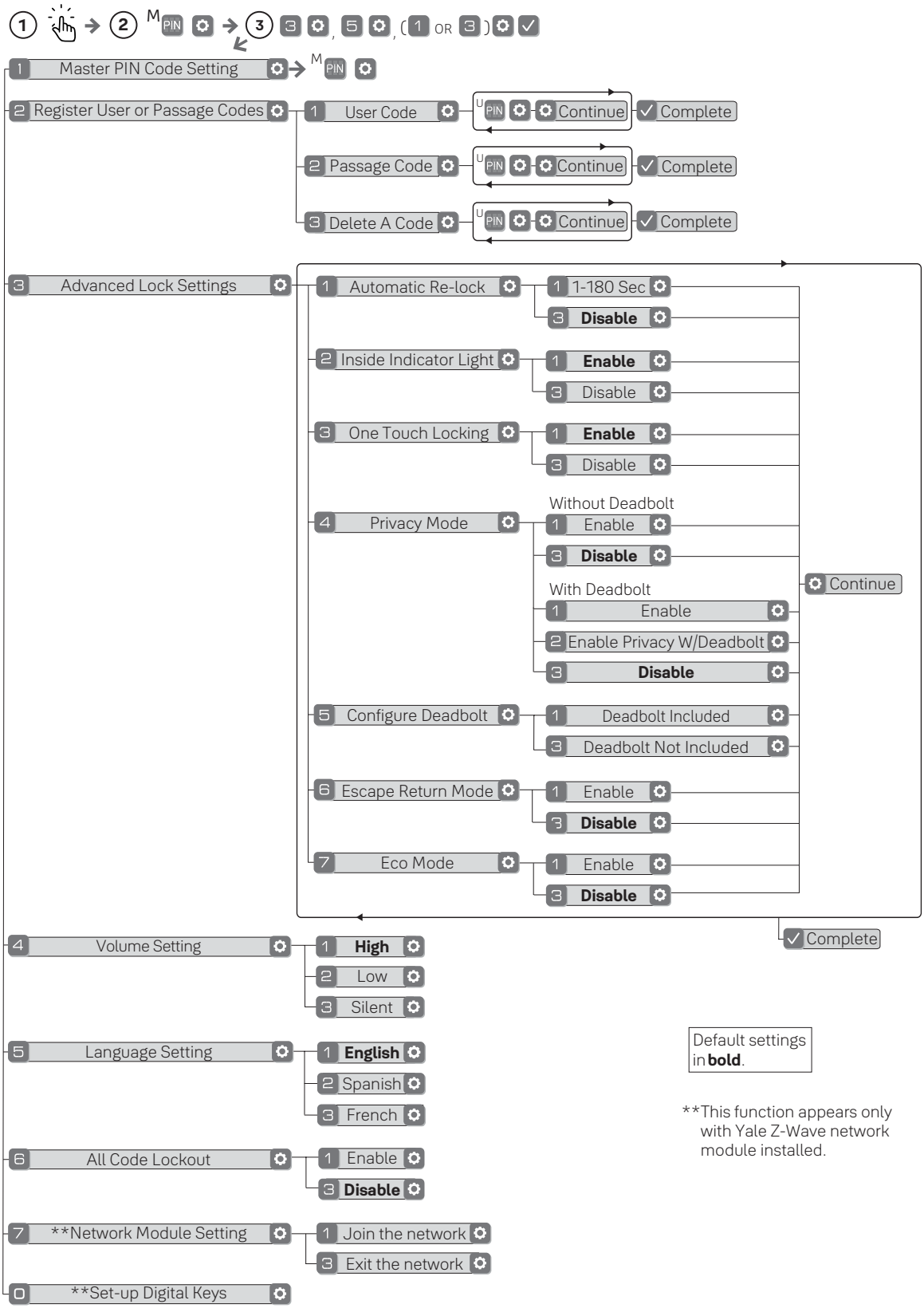

Default settings in **bold**.

**This function appears only with Yale Z-Wave network module installed.

Programming Troubleshooting

Symptom	Suggested Action
Lock does not respond. There are no lights or chimes and there is no mechanical sound indicating latchbolt movement.	Touchscreen models become active by pressing Yale logo or ✓ key or by touching keypad with whole hand. Push Button models become active when any key is pressed. • Check batteries are installed and oriented correctly (polarity). • Replace batteries. • Check that cables are fully connected on inside lock and not crimped. • Apply 9V battery to terminals on the keypad for emergency power jump option.
Lock wakes but does not respond. Lights dim.	• Batteries do not have enough power. Replace batteries.
Lock chimes to indicate code acceptance, but door will not open.	• Check for another locking device on the door (i.e. deadbolt). • Check the door gaps for any foreign objects between door and frame. • Check that the motor cable is firmly connected into the PC board marked "MOTOR" on inside lock. • Check that the locking slide moves freely and there is no foreign material in mortise pocket.
Lock operates to allow access, but will not automatically re-lock.	• Ensure Auto Re-lock Mode is enabled by Master user. • Replace batteries. • Ensure Escape Return Mode and Passage Mode are disabled.
User/Passage PIN codes will not register.	• Master user creates/manages User and Passage PIN codes. • PIN codes must consist of 4 to 8 digits to register. • PIN code may already be registered. • Check to see if a yellow Accentra Key module is installed. PIN codes are disabled when Accentra is installed. • PIN codes must be entered within 20 seconds (while keypad is active) or process will have to be restarted. • Check ✓ or gear ⚙ cannot be used as part of the PIN code.
Upon entering a User/Passage PIN code and pressing the ✓ key, the lock chimes an error or lock times out without responding.	• Ensure All Code Lockout Mode is disabled by Master user. Touchscreen will display a red padlock on keypad. • The digits entered were incorrect or incomplete. Re-enter 4-8 digits followed by the check ✓ key. • Master user may have deleted PIN code. • PIN code may have expired. • Check to see if a yellow Accentra Key module is installed. PIN codes are disabled when Accentra is installed. • PIN codes must be entered within 20 seconds (while keypad is active) or process will have to be restarted.
TS lock displays "Low Battery" on keypad. PB lock Yale logo flashes red.	• This is the alert to replace the batteries. Replace all four (4) batteries with new AA Alkaline batteries.
The lock operates, but it does not chime.	• Ensure Volume is set to Low or High by Master user.
Lock will not enter Privacy Mode.	• Ensure Privacy Mode is enabled by Master user. • Ensure door gap is correct.

NOTE: When batteries are replaced, Network Module locks have a real time clock that will be set through the User Interface (UI); it is recommended to verify correct date and time particularly those locks operating under Daylight Saving Time (DST).

Factory Settings

Settings	Factory Setting
Master PIN Code	Creation **required***
All Code Lockout	Disabled
Automatic Relock	Disabled
Escape Return Mode	Disabled
Inside Indicator Light	Enabled
Language Setting	English**
One Touch Locking	Enabled
Privacy Mode	Disabled
Shutdown Time	60 Seconds
Volume Setting	High
Wrong Code Entry Limit	5 Times

*The Master PIN code must be created prior to any other programming of the lock.

**Language retains chosen setting even when lock is reset to factory default.

For easy 3D instructions, download the BILT mobile app

BILT®

FCC:
This device complies with part 15 of the FCC Rules. Operation is subject to the following two conditions: (1) This device may not cause harmful interference, and (2) this device must accept any interference received, including interference that may cause undesired operation.

Any changes or modifications (including the antennas) to this device that are not expressly approved by the manufacturer may void the user's authority to operate the equipment.

Note : This equipment has been tested and found to comply with the limits for a Class B digital device, pursuant to part 15 of the FCC Rules. These limits are designed to provide reasonable protection against harmful interference in a residential installation This equipment generates, uses and can radiate radio frequency energy and, if not installed and used in accordance with the instructions, may cause harmful interference to radio communications, However, there is no guarantee that interference will not occur in a particular installation. If this equipment does cause harmful interference to radio or television reception, which can be determined by turning the equipment off and on, the user is encouraged to try to correct the interference by one or more of the following measures:

- Reorient or relocate the receiving antenna.
- Increase the separation between the equipment and receiver.
- Connect the equipment into an outlet on a circuit different from that to which the receiver is connected.
- Consult the dealer or an experienced radio/TV technician for help.

Modifications not expressly approved by the manufacturer could void your authority to operate the equipment under FCC rules.

Industry Canada:
This device contains licence-exempt transmitter(s)/receiver(s) that comply with Innovation, Science and Economic Development Canada's licence-exempt RSS(s). Operation is subject to the following two conditions:

(1) This device may not cause interference.

(2) This device must accept any interference, including interference that may cause undesired operation of the device.

L'émetteur/récepteur exempt de licence contenu dans le présent appareil est conforme aux CNR d'Innovation, Sciences et Développement économique Canada applicables aux appareils radio exempts de licence. L'exploitation est autorisée aux deux conditions suivantes :

(1) L'appareil ne doit pas produire de brouillage;

(2) L'appareil doit accepter tout brouillage radioélectrique subi, même si le brouillage est susceptible d'en compromettre le fonctionnement.

FCC and IC RF Radiation Exposure Statement:
This equipment complies with FCC and IC RF Radiation exposure limits set forth for an uncontrolled environment.

This device and its antenna must not be co-located or operating in conjunction with any other antenna or transmitter.

RF du FCC et IC d'exposition aux radiations: Cet équipement est conforme à l'exposition de FCC et IC rayonnements RF limites é-tablies pour un environnement non contrôlé.

L'antenne pour ce transmetteur ne doit pas être même endroit avec d'autres émetteur sauf conformément à FCC et IC procédures de produits Multi-émetteur.

Support Contacts:

Customer Service Phone:
1-800-438-1951
Customer Service Fax:
1-800-338-0965
24/7 Support Phone:
1-855-213-5841
24/7 Support Email:
Support@YaleLock.com
Website:
US.YaleHome.com
Email for orders:
orders.yaleres@assaabloy.com

THE YALE BRAND, with its unparalleled global reach and range of products, reassures more people in more countries than any other consumer locking solution.

THE ASSA ABLOY GROUP is the world´s leading manufacturer and supplier of locking solutions, dedicated to satisfying end-user needs for security, safety and convenience.

Yale Commercial is a business associated with ASSA ABLOY Access and Egress Hardware Group, Inc., an ASSA ABLOY Group company. Copyright © 2018 - 2021, ASSA ABLOY Access and Egress Hardware Group, Inc. All rights reserved. Reproduction in whole or in part without the express written permission of ASSA ABLOY Access and Egress Hardware Group, Inc. is prohibited.

ASSA ABLOY

The global leader in door opening solutions

Yale Locks

Z-Wave Plus™ System Integrators Guide

Yale NexTouch Exit Trim Commercial Grade Lock

Document Revision: 2

Contents

Yale Z-Wave Plus Product Info 3

Supported Command Classes 3

Association Table 4

Notifications Table 4

Configurable Parameters 6

* Command Class Requires Security

Yale Z-Wave Plus Product Info

Manufacturer ID: Assa Abloy (0x0129)

Z-Wave Device Type: Door Lock Keypad

Z-Wave Role Type: Listening Sleeping Slave (LSS)

Product ID:

- 0x1200 for NTT610/620/630/640-ZW2 (Exit Device)
- 0x0C0C for NTT612-ZW2 (2nd Generation Touch Screen Exit Device)
- 0x0C16 for NTT622-ZW2 (2nd Generation Touch Screen Exit Device)

Product Type ID:

- 0x8009 for NTT610/630-ZW2 (Pushbutton Exit Device)
- 0x800A for NTT620/640-ZW2 (Touch Screen Exit Device)
- 0x8102 for NTT612/622-ZW2 (2nd Generation Exit Device)

Supported Command Classes

Command Class Z-Wave Plus Info
Command Class Manufacturer Specific
Command Class Security
Command Class Device Reset Locally
Command Class Power Level
Command Class Version
Command Class Battery*
Command Class Door Lock*
Command Class Door Lock Logging*
Command Class Schedule Entry Lock*
Command Class User Code*
Command Class Time Parameters*
Command Class Time*
Command Class Association*
Command Class Association Group Info*
Command Class Notification*
Command Class Configuration*
Command Class Firmware Update Md*
* Command Class Requires Security

Association Table

Group ID	Maximum Nodes	Description	Commands
1	1	Lifeline	Command_Class_Battery, Battery_Report ; Command_Class_Notification, Notification_Report; Command_Class_Configuration, Configuration_Report; Command_Class_Device_reset_locally, Device_Reset_locally_notification

Notifications Table

Alarm Reports	***Alarm type***	***Alarm Level***	***Description***
Master Code changed.	0x70	0x00	Master code was changed at keypad
		0xFB	Master code was changed over RF
User added		0x(01-max users)	User added. Alarm level = user slot number
User deleted	0x21	0x(01-max users)	User was deleted. Alarm level = user slot number
Tamper Alarm	0xA1	0x01	keypad attempts exceed code entry limit
		0x02	front escutcheon removed from main
RF Operate Unlock	0x19	0x01	by RF module
Manual Unlock	0x16	0x01	By key cylinder or inside thumb turn
Keypad Unlock	0x13	0x(01-max users)	Where Alarm level represents user slot number (0xFB = Master Code)
Manual Lock	0x15	0x01	by key cylinder or inside thumb-turn
		0x02	by touch function (lock and leave)
		0x03	By inside button
RF Operate Lock	0x18	0x01	by RF module
Keypad Lock	0x12	0x (01 - max users)	Where Alarm level represents user slot number
Non Access	0x26	0x(01-max users)	A Non Access Code was entered at the lock. Where alarm level represents user slot number
Jammed	0x09	0x01	Jammed while locking
		0x02	Jammed while unlocking
Low Battery Alarms**	0xA9	0x (Current %)	Too Low to operate (Starting at 4.6V for **0x8009** & **0x800A**; 4.2V for **0x8102**)

	0xA8	0x (Current %)	Critical Battery Level (Starting at 4.8V for **0x8009** & **0x800A**; 4.4V for **0x8102**)
	0xA7	0x (Current %)	Low Battery (Starting at 5V for **0x8009** & **0x800A**; 4.6V for **0x8102**)
Auto Lock Operate Locked	0x1B	0x01	Auto re-lock cycle complete, locked.
Duplicate Pin-code error	0x71	0x (01-max users)	Where Alarm level represents user slot number Alarm generated in response to add user RF cmd. This alarm is not generated when attempting to add duplicate pin at the keypad. The lock simply denies it and plays the "Denied". Trying to duplicate the master code will result in a 0x71 0x00 alarm report.
RF Module Power Cycled	0x82	0x00	Power to RFM was restored, sent by RF module. The lock doesn't send any alarm to the RF module when power is cycled.
Disabled user entered at keypad	0x83	0x(01-max users)	A disabled user pin code was entered at the keypad
Valid user but outside of schedule	0x84	0x(01-max users)	A valid user can be both a normal user and a Non-Access user. If a non-access user is out of schedule this alarm will be sent instead of the non-access alarm.
Door Position Sensor (Optional Hardware Required)	0x2B	0x00	Door Opened
		0x01	Door Closed
		0x02	Door Propped (Door Open for longer than configurable door propped time)
Daily Repeating Schedule Set/Erased	0x60	0x(01-max users)	Schedule(s) has been set/erased for specified user ID
Daily Repeating Schedule Enabled/Disabled	0x61	0x(01-max users)	Schedule(s) has been enabled/disabled for specified user ID
Year Day Schedule Set/Erased	0x62	0x(01-max users)	Schedule(s) has been set/erased for specified user ID
Year Day Schedule Enabled/Disabled	0x63	0x(01-max users)	Schedule(s) has been enabled/disabled for specified user ID
All Schedule Types Erased	0x64	0x(01-max users)	Schedule(s) has been set/erased for specified user ID
All Schedule Types Enabled/Disabled	0x65	0x(01-max users)	Schedule(s) has been enable/disabled for specified user ID

** - The Yale NexTouch Exit Rim Trim locks also supports a 3rd low battery alarm, too low to operate. This alarm is sent out as a Battery Report (with value = 0xFF) through the Battery Command Class. This is the last low battery alarm level before the product stops functioning.

Configurable Parameters

Configuration Parameters	***Parameter Number***	***Size***	***Description***
Silent mode on/off	1	1 byte	Level control, 1 = High Volume, 2 = Low Volume, 3 = Silent. **Default is 2 or Low Volume**
Auto Relock on/off	2	1 byte	**0x00 = OFF**, 0xFF = ON **default is 0x00 or OFF**
Auto Relock time	3	1 byte	10 to 180 seconds **default is 30 seconds**
Wrong Code Entry Limit	4	1 byte	3 to 10 **default is 5 times**
Language	5	1 byte	1=English, 2=Spanish, 3=French **default is 1= English**
Shut down time (after wrong code entries)	7	1 byte	10 to 180 seconds **default is 60 seconds**
Operating mode	8	1 byte	**00 = normal mode (this is the default mode)** 01 = vacation mode, keypad lockout 02= privacy mode, no keypad. RF Unlock will work
One Touch Locking	11	1 byte	0x00 = OFF, 0xFF = ON **default is 0xFF or ON.**
Privacy Button	12	1 byte	0x00 = OFF, 0xFF = ON default is 0x00 or OFF
Lock Status LED	13	1 byte	0x00 = OFF, 0xFF = ON **default is 0x00 or OFF.**
Reset To Factory Defaults	15	1 byte	01 = Lock will execute Reset To Factory. **No default value**
Door Propped Timer***	18	1 byte	10 to 2540 second. This value is represented as seconds X 10. (ie a value of 4 would mean a door propped timer of 40 seconds) Set to 0x00 to disable Door Propped Alarm. **Default = 0x00 (off)**
DPS Alarms***	19	1 byte	0x00 = OFF, 0xFF = ON **Default is 0x00 or off.** Used to enable/disable door condition alarms for locks that support a door position sensor. Any lock that does not support DPS will always report 0x00.
Eco Mode On/Off	21	1 byte	**0x00 = OFF**, 0xFF = ON **default is 0x00 or OFF** If supported switches lock to lower power mode of operation with reduced sound and led brightness.

*** - Additional hardware required. These parameters are only active if the optional Door Position Switch has been installed with the lock.