Yale Locks

Z-Wave Plus® System Integrators Guide

Yale Assure Electronic Connected Deadbolts

Document Revision: 1.0

July 2023

Contents

Revision History 3
Yale Z-Wave Plus® Product Info 4
Network Operations 4
Enroll/Add device to network (Classic Inclusion Mode) for Assure 2 Lock 4
Un-enroll/Remove device from network (Exclusion Mode) 4
Factory Reset 5
Supported Command Classes 5
Command Class Z-Wave Plus ® Info, Version 2 5
Command Class Manufacturer Specific, Version 2 6
Command Class Security, Version 1 7
Command Class Device Reset Locally, Version 1 7
Command Class Power Level, Version 1 7
Command Class Version, Version 2 8
Command Class Battery, Version 1* 9
Command Class Door Lock, Version 2* 9
Command Class Door Lock Logging, Version 1* 9
Command Class Schedule Entry Lock, Version 3* 9
Command Class User Code, Version 1* 10
Command Class Time Parameters, Version 1* 12
Command Class Time, Version 2* 12
Command Class Firmware Update Meta Data, Version 3* 13
Command Class Association, Version 2* 13
Command Class Association Group Info, Version 1* 14
Command Class Notification, Version 4* 16
Command Class Configuration, Version 1* 20
Yale Locks in Z-Wave 500 Series System Best Practices 23
Communication Signal Format 23
Commands Communication Timing 24

* This command class requires security.

Revision History

Rev.	Details
1.0	Initial Release

Yale Z-Wave Plus ®Product Info

Manufacturer ID: ASSA ABLOY (0x0129)

Z-Wave® Device Type: Door Lock Keypad

Z-Wave® Role Type: Listening Sleeping Slave (LSS)

Network Operations

Enroll/Add device to network (Classic Inclusion Mode) for Assure 2 Lock

Un-enroll/Remove device from network (Exclusion Mode)

- Enter the 4–8-digit Master PIN code followed by the ⚙ key.
- Press the 7 key followed by the ⚙ key.
- Press the 3 key followed by the ⚙ key.

When the Yale lock is unenrolled/excluded from the network through the device menu mode, any changes previously made to the user code database and configuration settings will be retained, as opposed to set back to defaults.

Factory Reset

- Factory resetting the lock with the Z-Wave® module installed will clear the Z-Wave® network settings, causing the device to be removed from the network.
- The following is the method of performing a factory reset:
    1. Manual factory reset, via power cycle while holding button on inside lock escutcheon.
        - See the Lock Installation Manual for details.
        - Please use the manual factory reset procedure only when the network primary controller is missing or otherwise inoperable.

Supported Command Classes

The Yale Assure Z-Wave Plus® deadbolts follow the Z-Wave® Command Class Specifications for all command classes that are implemented. Please refer to these specifications for specifics on how each command class works. The supported command classes are listed below, and certain sections contain details about operations that may be specific to the Yale lock. If a section is blank, then please refer to the Z-Wave® specifications.

As a secure device, most of the command classes supported by the lock are required to be sent securely with Z-Wave® security. During enrollment, the controller can use the Security Command Class to get this list directly from the lock. If a command class requires security, it is also indicated as such below.

Specification used:

- sds12657-11_z-wave_command_class_specification_a-m
- sds12652-12_z-wave_command_class_specification_n-z

Command Class Z-Wave Plus® Info, Version 2

The Z-Wave Plus® Info command class reports the following information:

- Role Type: Slave Sleeping Listening (0x07)
- Node Type: Z-Wave Plus® Node (0x00)
- Installer Icon Type: 0x0300
- User Icon Type: 0x0300

Command Class Manufacturer Specific, Version 2

The Manufacturer Specific command class reports the following information:

- Manufacturer ID: 0x0129
  - This is the manufacturer ID assigned to ASSA ABLOY.
- Product ID:
  - The Product ID can be used to differentiate between hardware platforms, as well as between ZW2 and ZW3. See Table 1 - First 2 Digits of Product ID, below, for details.
  - Product IDs for the locks covered in this document are as follows:
    - 0x05D1 for YRD410-ZW2 (2nd Generation Assure Keyed Push Button Deadbolt)
    - 0x05D2 for YRD420-ZW2 (2nd Generation Assure Keyed Touch Screen Deadbolt)
    - 0x05D3 for YRD430-ZW2 (2nd Generation Assure Keyless Push Button Deadbolt)
    - 0x05D5 for YRD450-ZW2 (2nd Generation Assure Keyless Touch Screen Deadbolt)
    - 0x05D1 for YRD614-ZW2 (2nd Generation Assure Keyed Push Button Deadbolt for PRO Customers)
    - 0x05D2 for YRD624-ZW2 (2nd Generation Assure Keyed Touch Screen Deadbolt for PRO Customers)
    - 0x05D3 for YRD634-ZW2 (2nd Generation Assure Keyless Push Button Deadbolt for PRO Customers)
    - 0x05D5 for YRD654-ZW2 (2nd Generation Assure Keyless Touch Screen Deadbolt for PRO Customers)

- Product Type ID:
  - 0x8104 for YRD410-ZW2, YRD420-ZW2, YRD430-ZW2, YRD450-ZW2, YRD614-ZW2, YRD624-ZW2, YRD634-ZW2 & YRD654-ZW2 (2nd Generation Assure Deadbolt)

Table 1 - First 2 Digits of Product ID

	Z-Wave® Type			Platform					Hex Value
[0x8104]-ZW2	0	0	0	0	0	1	0	1	***0x05***
[0x8104]-ZW3	0	1	0	0	0	1	0	1	***0x45***

Command Class Security, Version 1

This command class has been implemented per the Z-Wave® Specification.

Command Class Device Reset Locally, Version 1

The Yale door locks covered in this guide can be reset to their factory default settings by manually resetting the lock or by BLE command via app for BLE locks (by following the procedure outlined in the specific lock's manual).

Upon factory reset, all Z-Wave® network settings are cleared, all the user codes are erased from the lock (including the master code), and all configurable settings are reset to default values, except for the language setting. A factory reset leaves the lock in a completely unsecure state (waiting for master code to be set), so care should be taken if using the configuration parameter to perform a remote reset. However, if the DUT is unenrolled/excluded from the network through the device menu mode, then the user code database and configuration settings will not be reset to the defaults.

Command Class Power Level, Version 1

This command class has been implemented per the Z-Wave® Specification.

The Power Level command class was implemented to allow controllers to set the transmit power for the door lock. This could be useful in large networks with many nodes, so that the lock can find working routes back to the controller while transmitting at a lower power. This ensures robust routes when the normal transmit power level is restored.

Currently there is no way to initiate a low power enrollment; this command class can only be used once the lock is enrolled successfully.

Command Class Version, Version 2

The Yale Real Living locks are a multi-processor system with 1 additional firmware target. All processors can be updated through the Firmware Update Meta Data command class. The firmware targets are numbered as follows:

- Firmware Target 0 = Z-Wave® Chip
- Firmware Target 1 = Lock Processor

To identify the firmware version for each target, the hex data in the firmware version report must be converted to decimal prior to combining major and minor version into the full version.

After a controller sends a Version Get command the log will display the Version Report similar to the below:

```
Send VERSION_GET to node 16 started
Send VERSION_GET to node 16 completed in 00:00:01.242
Rx [S2_ACCESS] VERSION_REPORT(86 12) + 03 07 10 02 22 02 01 2C 00
```

The above Version Report will be defined as this in the Z-Wave® sniffer tool, Zniffer:

```
Command Class Version ver.3
Version Report
    Z-Wave Library Type:          0x03
    Z-Wave Protocol Version:      0x07
    Z-Wave Protocol Sub Version:  0x10
    Firmware 0 Version:           0x02
    Firmware 0 Sub Version:       0x22
    Hardware Version:             0x02
    Number of firmware targets:   0x01
  ▾ vg 1:                         2C 00
      Firmware Version:             0x2C
      Firmware Sub Version:         0x00
```

For Firmware Target 0, the Firmware 0 Version (0x02) and Sub version (0x22) translate to module firmware decimal value of "2.34".

For Firmware Target 1 (the data under vg1), Firmware Version (0x2C) and Sub version (0x00) translate to lock firmware decimal value of "4.3.00".

Command Class Battery, Version 1*

* This command class requires security.

Per the Z-Wave Plus® Specification, the lock will send a Battery Report with a value of 0xFF to the Lifeline node when a critical battery level is reached (starting at about 4.2V for Product Type ID 0x8104). In addition, the Yale Locks provide 2 earlier low battery alarms through the notification command class (see Table 7 - Notification Table).

Low battery alarms will be generated if the lock is in a low battery state during one of the following events: any motor activation (keypad lock/unlock, RF lock/unlock, etc.), controller sends Get Battery command, or the unsolicited battery report was triggered. Yale locks will generate an unsolicited Battery Report at lock boot-up and every 8 hours if a node is listed in the Lifeline Group.

Command Class Door Lock, Version 2*

* This command class requires security.

Yale Z-Wave Plus® locks support three door lock modes: Door Secured (0xFF), Door Unsecured (0x00), and Door Unsecured with timeout (0x01). When Auto Relock is enabled, the lock will automatically relock after all unlock events. Yale Z-Wave Plus® locks do not support any of the "Door Unsecured for outside Door Handles" (0x20, 0x21) or "Door Unsecured for inside Door Handles" (0x10, 0x11) modes.

Command Class Door Lock Logging, Version 1*

* This command class requires security.

This command class has been implemented per the Z-Wave® Specification.

Command Class Schedule Entry Lock, Version 3*

* This command class requires security.

Yale locks support Year Day Schedule types and Daily Repeating Schedule types. Yale locks allow the controller to apply multiple schedules to a single user. Each user has 1 Year Day Schedule slot (Slot ID 1) and 7 Daily Repeating slots (Slot IDs 1 – 7). If user scheduling is used in the lock, then the controller MUST set the lock's time using the Time Parameters command class.

Command Class User Code, Version 1*

* This command class requires security.

Version 1 of this command class can address user code slots 1 through 250 via the User Code Set/Get/Report commands.

Table 2 – Expected Reports for Set/Get Commands

Command	Slots 1-250	Slot 251	Slots 252-254	Slot 255	Slots 256-500
User Code CC v1: User Code Get	User Code Report	User Code Report	User Code Report	User Code Report	N/A
User Code CC v1: User Code Set	User Code Report	Master Code Report	User Code Report	User Code Report	N/A

The master code can be accessed (read/write) using slot 251 (0xFB), if using version 1 of this command class.

Yale locks do not support bulk commands (setting or getting multiple user codes at once) or CRC functionality for this command class.

The following implementation notes apply specifically to non-access user codes:

- The usage of non-access users has changed slightly with ZW3, compared to ZW2, but is still backwards compatible. If a User Code Set is transmitted using version 1 of the command class, then the lock will accept a value of 0x04 as the status for the non-access user.
- A non-access user can be identical to a "normal" PIN code, aside from the fact that it does *not* grant access.
- Any available user code slot (except the master code) can be used to store non-access user code.
- Schedules can be applied to non-access users.

Yale locks support the following User ID Status values:

Table 3 - User ID Status User Code CC v1

User ID Status	User Code CC v1 Set	User Code CC v1 Report Value
Description	*Value*	*Value*
Available	0x00	0x00
Enabled / Grant Access	0x01	0x01
Disabled	0x02	0x03
	0x03	
Messaging: The user code is accepted, but the lock does not grant access to the user. Instead, it generates an alarm to the Lifeline and does NOT take preventative actions for further attempts to enter the User ID and/or User Code.	0x04	0x04
One-Time Use: This PIN is disabled immediately after being used for a successful unlock operation.	0x06	0x06
Expiring: This PIN is disabled once a specified amount of time has passed after being used for a successful unlock operation. The expiration time is set through the Configuration command class.	0x07	0x07

Command Class Time Parameters, Version 1*

* This command class requires security.

The controller must set the Time Parameters in the lock anytime the lock loses power. If the time is not set by the controller, then user codes with schedules applied to them cannot be granted access. When the lock is powered up, it will generate a Notification Report to indicate to the controller that power has been applied (Alarm V1 Type = 0x82, Alarm V1 Level = 0x00, Event Type = 0x08, Event Value = 0x01). This indicates to the controller that the lock no longer has a valid time set.

If the controller does not support either the Time CC or Time Parameters CC, then scheduled users will not have access.

Command Class Time, Version 2*

* This command class requires security.

The controller must set the Time Parameters in the lock anytime the lock loses power. Even though the Time CC is not secure, the Time Set command must be issued at the same or higher security level as when the device was enrolled for time to be set otherwise it will be rejected by the device. After 10 seconds from lock enrollment, if there are no messages from the controller the lock will initially request the Time (by sending Time Get and Time Parameter Get commands). If the time is not set by the controller, then user codes with schedules applied to them cannot be granted access. When the lock is powered up, it will generate a Notification Report to indicate to the controller that power has been applied (Alarm V1 Type = 0x82, Alarm V1 Level = 0x00, Event Type = 0x08, Event Value = 0x01). This indicates to the controller that the lock no longer has a valid time set.

If the controller does not support either the Time CC or Time Parameters CC, then scheduled users will not have access.

A time sync should occur every 8 hours, starting with the Time CC. If there is no response within a minute, the next step is to issue a Time Parameters Get to sync time.

Command Class Firmware Update Meta Data, Version 3*

* This command class requires security.

Yale Z-Wave Plus® locks support over-the-air (OTA) upgrading of 2 firmware targets:

1. Firmware Target 0: Z-Wave® chip
2. Firmware Target 1: The lock main processor

Firmware Target 0 is used to determine the correct Z-Wave® processor image to download. Firmware Target 0 ID is always 0x0301, to signal this is a Z-Wave® image.

Firmware 1 target will depend on which version of the lock is in use (mapped to the Product Type ID).

- For YRD410-ZW3, YRD420-ZW3, YRD430-ZW3, YRD450-ZW3, YRD614-ZW3, YRD624-ZW3, YRD634-ZW3 & YRD654-ZW3 (2nd Generation Assure Deadbolt), Firmware 1 ID = 0x8104

After an OTA is performed (a Firmware Update Status Report should return with successful), there is an additional step internally where we write/apply the image to the lock/module. When the image is being applied to the lock, the lock is unresponsive until completion of the applied image. Once the completion of the OTA image is applied the lock silently reboots.

Command Class Association, Version 2*

* This command class requires security.

This command class has been implemented per the Z-Wave® Specification.

Command Class Association Group Info, Version 1*

* Command Class Requires Security

Yale locks support the Lifeline Association Group.

Table 5 - Association Table

Group ID	Maximum Nodes	Description	Commands
1	1	Lifeline	• Command Class Battery o Battery Report • Command Class Configuration o Configuration Report • Command Class Notification o Notification Report • Command Class Device Reset Locally o Device Reset Locally Notification

The following are the actions to trigger the reports:

Table 6 – Lifeline Report Trigger Table

Report Command	RF Trigger	Manual Trigger
Battery Report	Any RF Lock Operation when lock is under the battery thresholds	Any manual/keypad Lock Operation when lock is under the battery thresholds or Power Cycle Lock
Configuration Report	Configuration Set	Change Lock Settings via Keypad
Notification Report (Access Control)	Any RF Lock Operation	Manual or Keypad Unlock/Lock
Notification Report (Power Management)	Any RF Lock Operation when lock is under the battery thresholds	Any manual/keypad Lock Operation when lock is under the battery thresholds or Power Cycle Lock
Device Reset Locally Notification		HW Factory Reset

Command Class Notification, Version 4*

* This command class requires security.

Table 7 - Notification Table

Alarm Reports	Alarm type	Alarm Level	Description	Notification Type	Event
Deadbolt Jammed	0x09	0x01	Deadbolt jammed while locking	0x06	0x0B
		0x02	Deadbolt jammed while unlocking	0x06	0x0B
Keypad Lock	0x12	0x (01 - max users)	Where Alarm level represents user slot number	0x06	0x05
Keypad Unlock	0x13	0x (01- max users)	Where Alarm level represents user slot number (0x00 = Master Code)	0x06	0X06
Manual Lock	0x15	0x01	by key cylinder or inside thumb-turn	0x06	0x01
		0x02	by touch function (lock and leave)	0x06	0x01
		0x03	By inside button	0x06	0x01

Manual Unlock	0x16	0x01	By key cylinder or inside thumb turn	0x06	0x02
		0x02	By inside button	0x06	0x02
RF Operate Lock	0x18	0x01	by RF module	0x06	0x03
RF Operate Unlock	0x19	0x01	by RF module	0x06	0X04
Auto Lock Operate Locked	0x1B	0x01	Auto re-lock cycle complete, locked.	0x06	0x09
User deleted	0x21	0x (01-max users)	User was deleted. Alarm level = user slot number	0x06	0X0D (single)
		0xFF [1]	All User codes were deleted		0X0C (all)
Non-Access	0x26	0x (01-max users)	A Non-Access Code was entered at the lock. Where alarm level represents user slot number	0x06	0xFE
Door State / DoorSense® [2]	0x2B	0x00	Door is open	0x06	0x16
		0x01	Door is closed	0x06	0x17
		0x02	Door Propped (Door Open for longer than configurable door propped time)	0x06	0xFE

Daily Repeating Schedule Set/Erased	0x60	0x (01-max users)	Schedule(s) has been set/erased for specified user ID	0x06	0xFE
Daily Repeating Schedule Enabled/Disabled	0x61	0x (01-max users)	Daily Repeating Schedule(s) were enabled/disabled for User ID specified in Alarm Level. If Alarm Level = 0xFF then all users were affected.	0x06	0xFE
Year Day Schedule Set/Erased	0x62	0x (01-max users)	Schedule(s) has been set/erased for specified user ID	0x06	0xFE
Year Day Schedule Enabled/Disabled	0x63	0x (01-max users)	Year Day Schedule(s) were Enabled/Disabled for User ID specified in Alarm Level. If Alarm Level = 0xFF then all users were affected.	0x06	0xFE
All Schedule Types Erased	0x64	0x (01-max users)	All Schedule Types were Set (erased/set) for User ID specified in Alarm Level. If Alarm Level = 0xFF then all users were affected.	0x06	0xFE
All Schedule Types Enabled/Disabled	0x65	0x (01-max users)	Schedule(s) has been enable/disabled for specified user ID. If Alarm Level = 0xFF then all users were affected.	0x06	0xFE
Master Code changed	0x70	0x00	Master code was changed at keypad	0x06	0x12
		0xFB	Master code was changed via RF	0x06	0X0E
User added		0x (01-max users)	User added. Alarm level = user slot number	0x06	0X0E
Duplicate Pin code error	0x71	0x (01-max users)	Where Alarm level represents user slot Number, an Alarm is generated in response to add user via RF. This alarm is not generated when attempting to add duplicate pin at the Keypad (The lock simply denies it and plays the "Denied" sound.) Trying to duplicate the master code will result in a 0x71 0x00 alarm report.	0x06	0x0F

Door Lock needs Time set / RF Module Power Cycled	0x82	0x00	Power to the lock was restored and the locks RTC was cleared. The controller should set the time to ensure proper logging.	0x08	0x01
Disabled user entered at keypad	0x83	0x (01-max users)	A disabled user pin code was entered at the keypad	0x06	0xFE
Valid user but outside of schedule	0x84	0x (01-max users)	A valid user can be both a normal user and a non-Access user. If a non-access user is out of schedule this alarm will be sent instead of the non-access alarm.	0x06	0xFE
Tamper Alarm	0xA1	0x01	keypad attempts exceed code entry limit	0x06	0X10
		0x02	front escutcheon removed from main	0x06	0xFE
Low Battery Alarms [3]	0xA7	0x (Current %)	*Low Battery* Starting at 4.6V	0x08	0x0A
	0xA8	0x (Current %)	*Critical Battery Level* Starting at 4.4V	0x08	0x0B
Integrated BLE Lock [4]	0xE2	0x00	Integrated BLE Lock	0x06	0x03
		0x01	Integrated BLE Auto Relock	0x06	0x09
Integrated BLE Unlock [4]	0xE3	0x00	Integrated BLE Unlock	0x06	0X04
		0x01	Integrated BLE Auto Unlock	0x06	0X04
Homekit BLE Lock [4]	0xE4	0x00	Integrated Homekit BLE Lock	0x06	0x03
Homekit BLE Unlock [4]	0xE5	0x00	Integrated Homekit BLE Unlock	0x06	0X04

[1] Deleting all user codes will also delete any associated schedules (year day and daily repeating scheduled pin codes) assigned to user codes.
[2] This requires additional Hardware and calibration within the Yale Access App.
[3] The Yale lock also supports a 3rd low battery alarm: too low to operate. This alarm is sent out as a Battery Report (with value = 0xFF) through the Battery Command Class. This is the last low battery alarm level before the product stops functioning. Starting at 4.2V (0x8104)
[4] Needs Yale Access App setup.

Command Class Configuration, Version 1*

* This command class requires security.

Table 8 - Configurable Parameters

Param. Num.	Name	Length	Configuration Properties			Info	Length of Info String
			Min	Max	Default		(Max length allowed is 90)
1	Volume	1 byte	0x01 (High Volume)	0x03 (Silent)	0x01 (High Volume) [0x8104]	Set Volume Level to high (1), low (2), or silent (3). [0x8104]	53
2	Auto Relock	1 byte	0x00 (Disable)	0xFF (Enable)	0x00 (Disable)	Set Auto Relock feature to enable or disable.	45
3	Relock time	1 byte	0x01 (1 seconds) [1]	0xB4 (180 seconds)	0x1E (30 seconds)	Adjust the time your lock will auto relock.	43

4	Wrong Code Entry Limit	1 byte	0x03	0x0A	0x03	Adjust the limit for wrong code entries allowed by your lock.	61
7	Shut down time	1 byte	0x0A (10 seconds)	0x84 (132 seconds)	0x3C (60 seconds)	Adjust the time your lock is shutdown after reaching its wrong code entry limit.	80
8	Operating mode[2]	1 byte	0x00 (Normal Mode)	0x03 (Passage Mode) [0x8104]	0x00 (Normal Mode)	Set the Operating Mode to normal mode, keypad disable mode or passage mode.	76
11	One Touch Locking	1 byte	0x00 (Disable)	0xFF (Enable)	0xFF (Enable)	Set One Touch Locking feature to enable or disable.	51
13	Lock Status LED	1 byte	0x00 (Disable)	0xFF (Enable)	0x00 (Disable)	Set Lock Status LED feature to enable or disable.	49

18	Door Propped Timer [3]	1 byte	0x00 (Disable) [4]	0xFE (2540 seconds) [4]	0x00 (Disable) [4]	Adjust the time to receive an alert when the door is propped open.	66
19	DPS Alarms (DoorSense®) [3]	1 byte	0x00 (Disable)	0xFF (Enable)	0xFF (Enable)	Enable or Disable DPS Alarms	28
28	Expiring Pin Code Enabled Time	1 byte	0x00 (Disable)	0xFF (127 Hours)	0x00 (Disable)	Timeout value used to determine time after first entry is triggered.	68

[1] Even though the lock accepts value 0x01 for Auto Relock Time, we limit the lock's minimum to value of 0x03. Therefore, if user tries to set Auto Relock Time to values 0x01 or 0x02, it will always report back value of 0x03.
[2] When Operation Mode feature is set to Passage Mode, this also results in disabling the following configuration parameters 2 (Auto Relock feature). The Passage Mode feature can only be set when user holds the inside button.
[3] This requires additional Hardware and calibration within the Yale Access App.
[4] The Door Propped value is represented as seconds X 10. (i.e., a value of 4 would mean a door propped timer of 40 seconds).

Yale Locks in Z-Wave 500 Series System Best Practices

Communication Signal Format

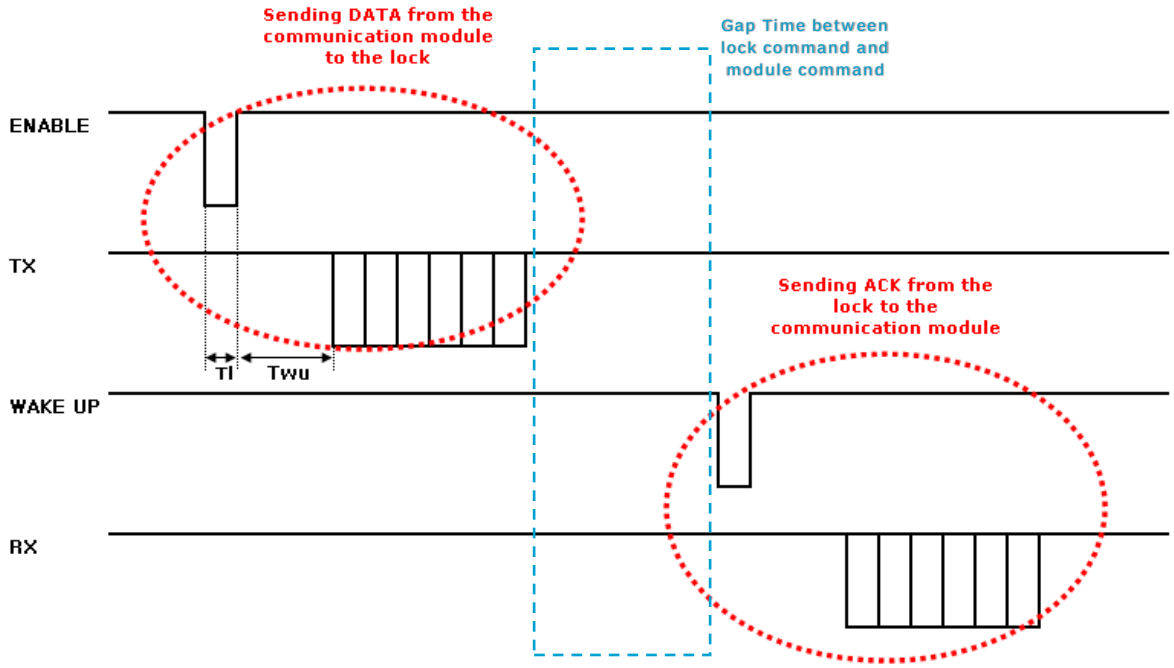

Figure 1: Signal Time Format

Data from the lock to Z-Wave 500 Series (ZW2) module takes 15 milliseconds.

Data from Z-Wave 500 Series (ZW2) module to the lock takes 272 milliseconds.

During the communication between the lock and module, the Z-Wave System must account for Gap time of 50 milliseconds which usually occurs when there is a configuration update, door lock state change, and user code being added/removed.

Commands Communication Timing

The following are the commands and total times that the Z-Wave System needs to be aware of when interacting with our ZW3 Locks before sending next commands:

Table 13 – Event vs Process Time

Commands/Events	TOTAL TIME
Door Lock Operation Get	287 milliseconds
Door Lock Operation Set (RF Unlock/Lock) [1]	2.674 seconds
Door Lock Operation Set -> Auto Relock [1]	5.011 seconds + Auto relock time.
Door Lock Operation Set (RF Unlock) -> Door Lock Operation Set (RF Lock) [1]	5.348 seconds
Manual Unlock via Thumb turn/ One Touch Lock via Keypad/ User Code Unlock/Lock [1]	337 milliseconds
User Code Get	287 milliseconds
User Code Set (Adding Single User Code) [2]	674 milliseconds
User Code Set (Deleting Single User Code)	337 milliseconds
User Code Set (Deleting All User Codes)	1.724 seconds
Configuration Get (Single Parameter)	287 milliseconds
Configuration Set (Single Parameter) [3]	674 milliseconds
Battery Get	287 milliseconds

[1] Our Motor operating time for moving deadbolts is 2 seconds.

[2] When multiple user codes are added in the Yale locks, an additional registration time of 230 milliseconds needs to be accounted for from User Code Set of Slot 1 to User Code Set of Lock's last slot.

[3] When Configuration Parameter 8, Operation Mode feature, is set to value 3, Passage Mode, this also results in disabling the following configuration parameters 2 (Auto Relock feature). Therefore, Total Time will be 1.248 seconds. When Configuration Parameter 16, Escape Return Mode feature, is enabled, this also results in disabling the following configuration parameters 2 (Auto Relock feature) and 11 (One Touch Locking feature). Therefore, Total Time will be 1.872 seconds.

Yale Pro® 2

Key-Free YRD634 / YRD654

Install Your Lock

Follow the step-by-step Installation Guide in this manual (pages 8-19).

Set Up, Program, and Use Your Lock

Follow the instructions in this manual (page 21) or in the Quick Start Guide to set up and program your lock. Create permanent entry codes, issue entry codes for guests, operate your lock with your phone, and more (pages 20-27).

⚠ All key-free locks should only be installed on homes with more than one point of entry.

Contents

In the Box **4**

Door Checker **5**

Marking Templates **6**

Installation Guide **8**

Remove Existing Deadbolt 9

Check Door Measurements 10

Make or Adjust Holes 11

Install Deadbolt Latch 12

Install Exterior Keypad 13

Install Mounting Plate 14

Attach Wire Cable to Interior Lock 15

Install Interior Lock 16

Test Thumbturn 17

Install Yale Smart Module 18

Install Batteries and Replace Cover 19

Using Your Lock **20**

Configuring Your Lock 21

LED Alerts 22

Resetting Your Lock to Factory Defaults 23

Features 24

Lock Operations Troubleshooting 25

Hardware Troubleshooting 27

P/N YRD604-KF-ZW-0044 Rev A

In the Box

Lock

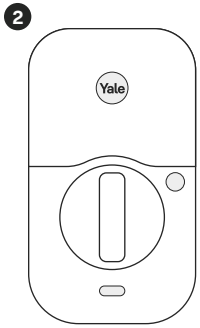

Add-Ons

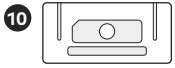

Hardware

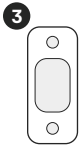

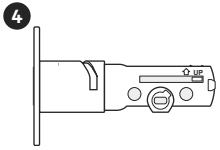

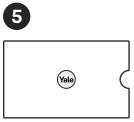

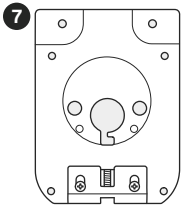

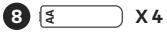

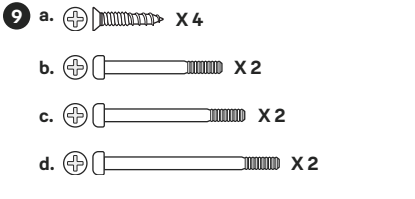

1. Exterior Keypad
2. Interior Lock
3. Strike Plate
4. Adjustable Deadbolt
5. Manual
6. Reset Pin
7. Mounting Plate
8. AA Batteries
9. Screws
   - **a.** Strike Plate and Deadbolt Screws
   - **b.** Teal Screw Set B
   - **c.** Black Screw Set C
   - **d.** Silver Screw Set D
   - **e.** Optional Security Strike Plate Screws
10. Smart Module

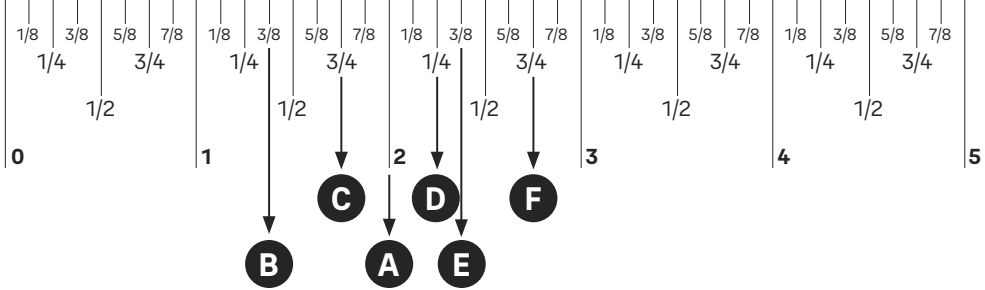

Tear Along the Dotted Line

Door Checker Part 1

See Reverse for Part 2 →

Measure Clearance

✓ Greater than A

✕ Less than A
(Your door is not a match)

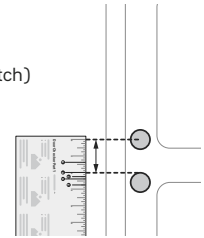

A. 2" minimum clearance between top of the door knob and center of deadbolt hole.

Measure Door Thickness

✓ B, C or D

✕ Less than B or greater than D
(Your door is not a match)

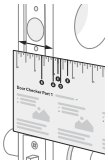

B. 1-3/8" door thickness; use **teal** (shortest) **screws**.

C. 1-3/8" - 1-3/4" door thickness; use black (medium) **screws**.

D. 1-3/4" - 2-1/4" door thickness; use **silver** (longest) **screws**.

Measure Backset

✓ Equals E or F

✕ Doesn't equal E or F
(Your door is not a match)

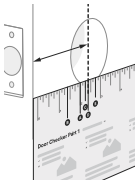

E. 2-3/8" backset, use out of box latch setting.

F. 2-3/4" backset, adjust latch setting (Step 2, point 1 of this manual).

P/N YRD604-KF-ZW-0044 Rev A

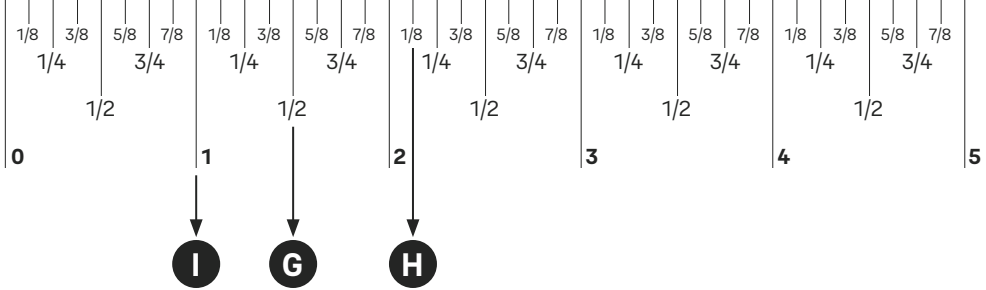

Door Checker Part 2

See Reverse for Part 1 →

Tear Along the Dotted Line

Measure Face Bore

✓ Equals G or H

✎ Less than G
(Adjust diameter to G or H)

✕ Greater than H
(Your door is not a match)

Measure Edge Bore and Strike Pocket

✓ Equals I

✎ Less than I
(Adjust diameter to I)

✕ Greater than I
(Your door is not a match)

Door (Edge Bore)

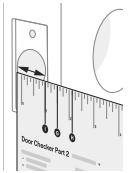

Frame (Strike Pocket)

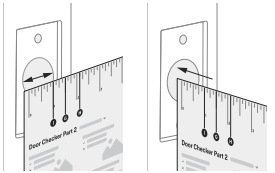

Diameter Depth

G. 1-1/2" face bore diameter.

H. 2-1/8" face bore diameter.

I. 1" edge bore diameter;
1" strike pocket diameter and depth.

⚠ Minimum strike pocket depth is 1".

Marking Template for 2-1/8” (54mm) Face Bore

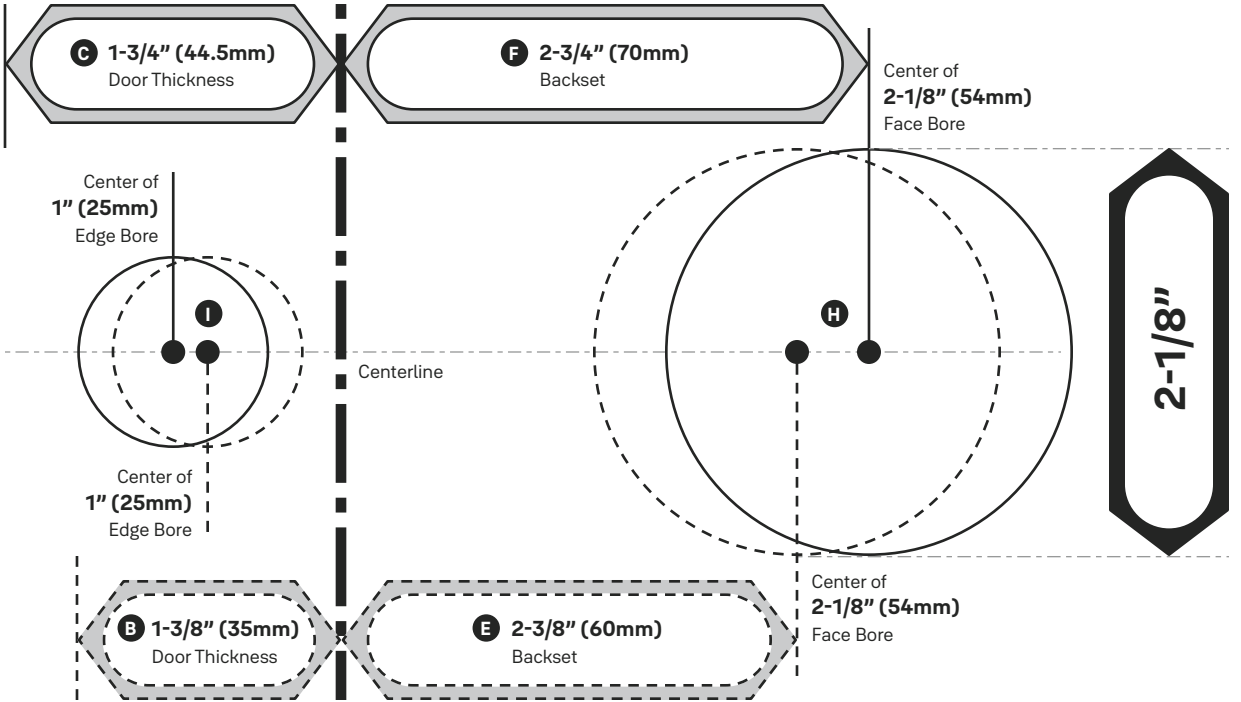

Tear Along the Dotted Line

P/N YRD604-KF-ZW-0044 Rev A

Marking Template for 1-1/2” (38mm) Face Bore

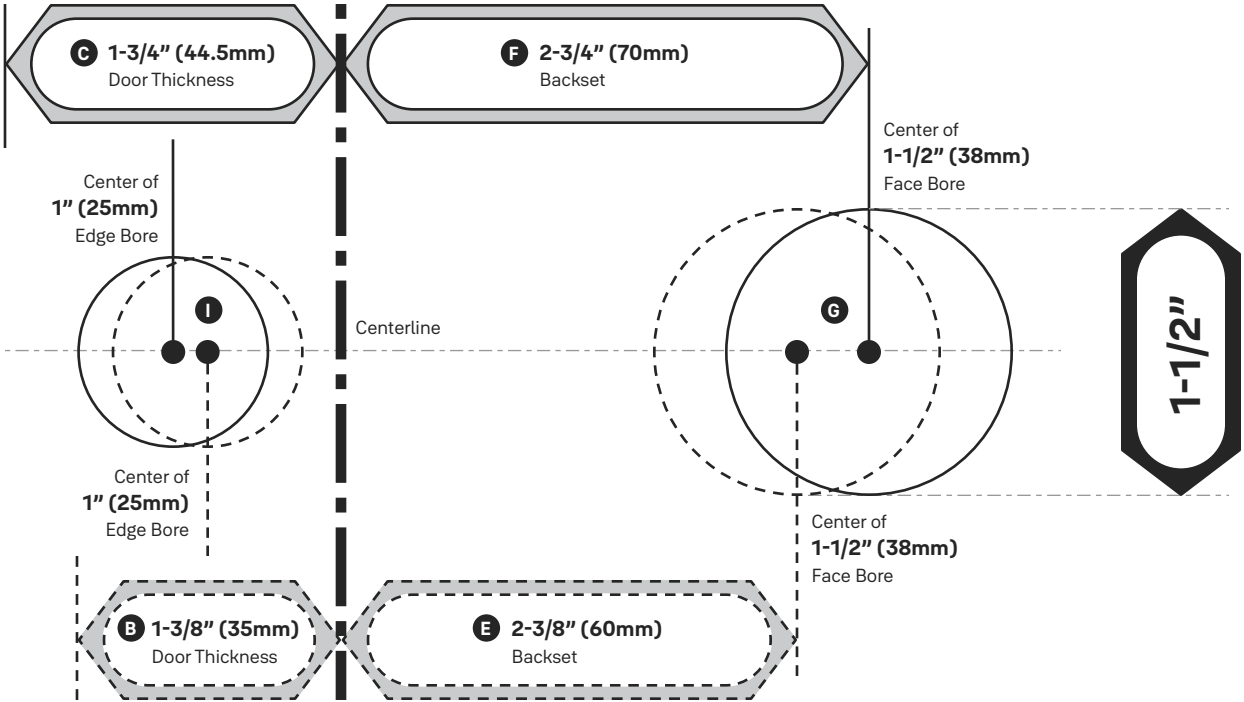

Tear Along the Dotted Line

P/N YRD604-KF-ZW-0044 Rev A

Installation Guide

Required Tools

1

2

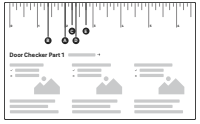

You Might Also Need

3

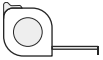

4

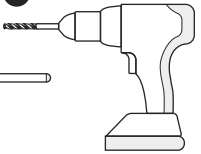

6

5

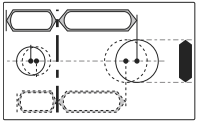

7

8

9

1. **Phillips Head Screwdriver**
2. **Door Checker**
   (tear off pages 5-6 of this manual)
3. **Tape Measure**
4. **Drill**
5. **Marking Template**
   (tear off pages 7-8 of this manual)
6. **Pencil**
7. **Wood Mortise Chisel**
8. **Utility Knife**
9. **Level**

⚠ Failure to follow the Installation Guide precisely could result in damage to the product, voiding the factory warranty, and could lead to failure of the product to provide access.

1a Remove Existing Deadbolt

If you have a new door, please proceed to step 1b. →

If you have a deadbolt on your door, use the diagram to help you remove it.

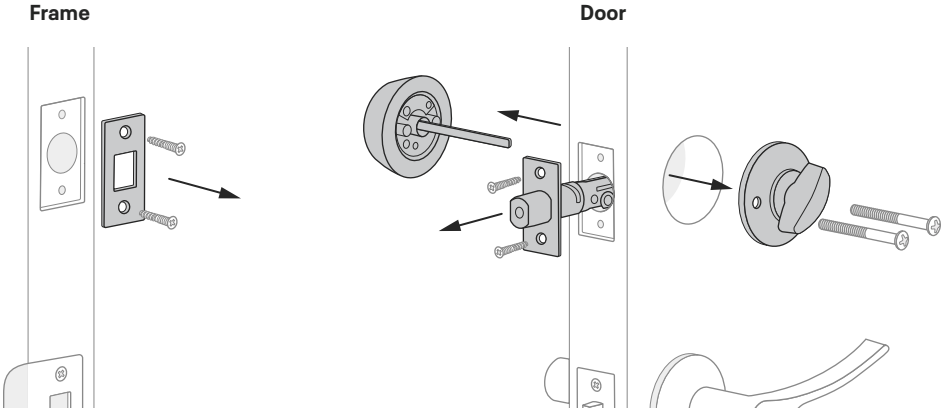

⚠ Keep your old deadbolt until your new lock has been successfully installed.

1b Check Door Measurements

If your door doesn't have holes, please proceed to step 1c. →

Tear off the **Door Checker** (pages 5-6) and follow the guidelines on **both sides** to measure each aspect of your door and frame. There are some cases when existing holes cannot be adjusted to be compatible.

If you need to make adjustments, go to **step 1c** and find the closest match to each aspect of your door on the **Marking Template**.

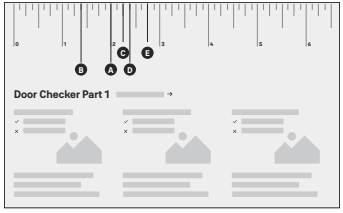

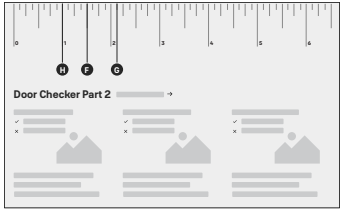

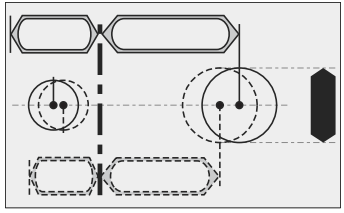

⚠ Please do not drill any holes until you confirm that your door is compatible.

If you have confirmed that the existing holes are compatible with your new lock, please proceed to step 2 (skip step 1c).

1c Make or Adjust Holes

Skip this step if you have confirmed that the existing holes are compatible (step 1b).

1. Tear off the **Marking Template** (pages 7-8), and choose the preferred face bore diameter (**2- 1/8"** or **1-1/2"**) on either side of the template.

2. Tape the Marking Template onto the door as shown.

3. Check the door thickness. It should match either the shape with **solid** outlines (**1-3/4"**), or the one with **dashed** outlines (**1-3/8"**).
   3a. Use **solid** lines as a template for **1-3/4"** door thickness.
   3b. Use **dashed** lines for **1-3/8"** door thickness.

4. Choose your preferred backset. It should match either the shape with **solid** outlines (**2-3/4"**), or the one with **dashed** outlines (**2-3/8"**).
   4a. Use **solid** lines as a template for **2-3/4"** backset.
   4b. Use **dashed** lines for **2-3/8"** backset.

5. Drill holes in your door where marked.

6. On the door frame, align the center of the strike plate with the center of the edge bore. Trace the strike plate, then chisel to the depth of the strike plate so it sits flush with your door frame. Drill the **1"** diameter strike pocket with a minimum depth of **1"**.

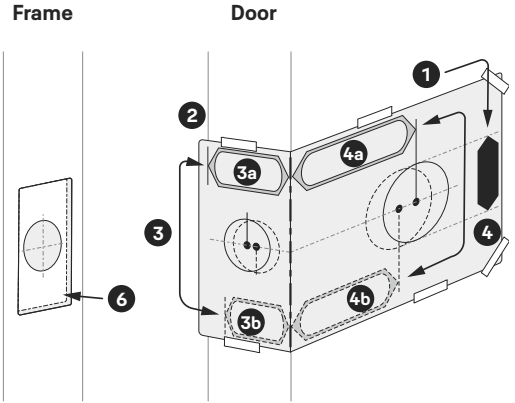

2 Install Deadbolt Latch

1. Correct deadbolt length is based on the backset. Refer to measurements **E** and **F** on the **Door Checker** (page 5) to verify backset.

⚠ Minimum strike pocket depth is 1".

E 2-3/8" Backset
(Out of box)

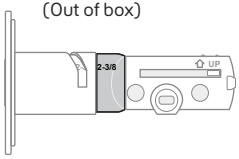

F 2-3/4" Backset
(To adjust, twist neck by holding the body stable)

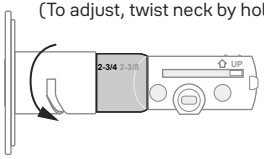

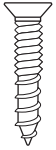

x 2 for Deadbolt Latch
x 2 for Strike Plate
(Actual size)

2. Align strike plate with deadbolt latch.
   2a. (Optional) Security screws can be used in place of the small strike plate screws.
3. Make sure UP arrow on the deadbolt is facing upwards.
4. Deadbolt latch must be in an unlocked position.

   Note: If the deadbolt latch is extended, use a small flathead screwdriver to rotate slot until deadbolt latch is retracted.

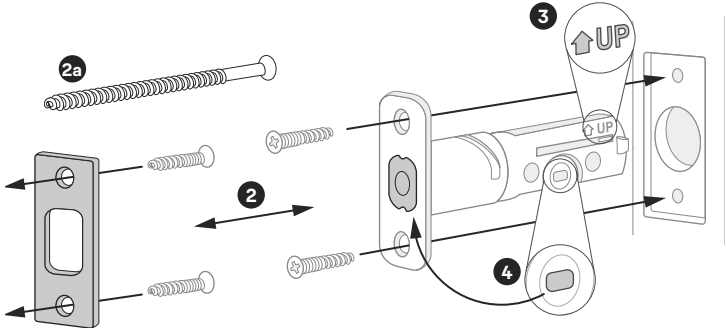

3 Install Exterior Keypad

1. Refer to measurements **G** and **H** on the **Door Checker** (page 6) to measure face bore hole. If the hole is **1-1/2"** (**G**), unscrew the two small screws and remove the adapter.

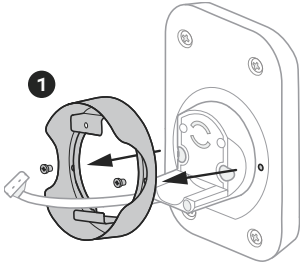

> ⚠ **Install your lock with the door open.**
> Do not close your door until all the steps are completed.

2. Make sure your deadbolt latch is in an unlocked position. Refer to **step 2, point 4** (page 13) for guidance on how to retract it, if needed.

3. Guide the wire cable under the deadbolt, making sure the keypad is on the exterior part of your door.

4. Slide the keypad in place. Hold or secure in place until the mounting plate is installed in the next step.

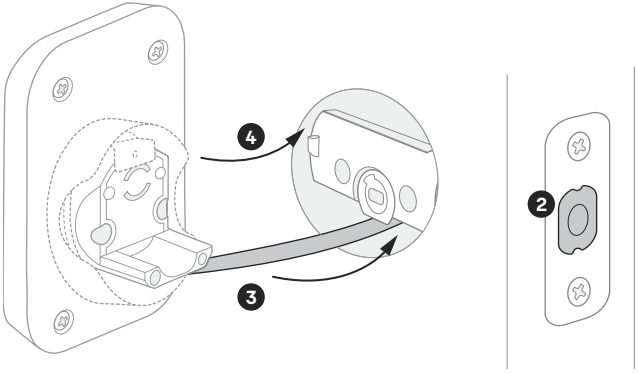

4 Install Mounting Plate

1. Refer to measurements **B**, **C**, and **D** on the **Door Checker** (page 5) to select screws.

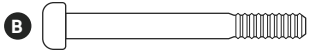

x 2 Teal Screws (1-3/8" door thickness)

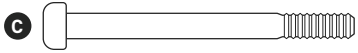

x 2 Black Screws (1-3/8" - 1-3/4" door thickness)

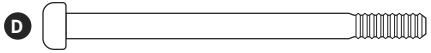

x 2 Silver Screws (1-3/4" - 2-1/4" door thickness)

2. Route the wire cable into the designated slot in the mounting plate.
3. Guide posts of the mounting plate into the holes on the exterior keypad.
4. Tighten screws with a screwdriver to secure the mounting plate. As you tighten the screws, make sure the mounting plate and the keypad are straight.

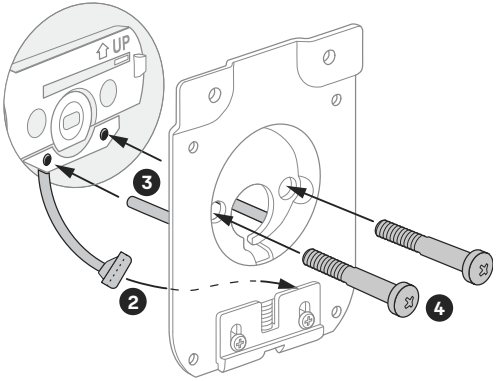

⚠ Ensure that the wire cable is not pinched to prevent it from reducing your lock's battery life.

5 Attach Wire Cable to Interior Lock

1. Remove battery cover by pulling it upwards off the body of the interior lock.

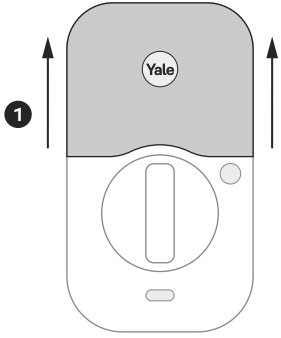

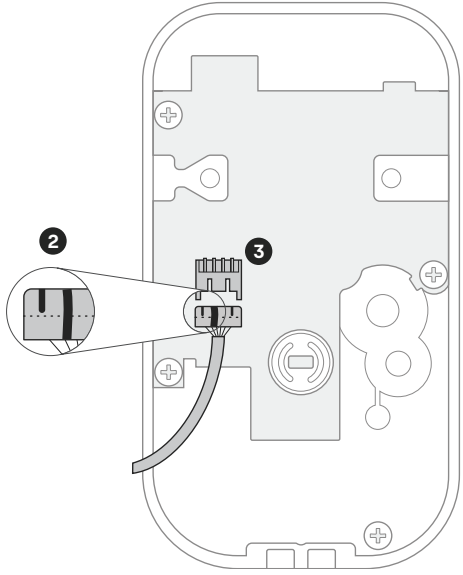

2. Make sure the side of the cable end with the ridges and the marked line faces outward.

3. Push cable into the designated slot until you hear a click.

6 Install Interior Lock

1. Make sure the tailpiece is in horizontal position. Use the thumbturn to adjust if needed.
2. Slide the tailpiece through the deadbolt latch slot.
3. Press the lock against the mounting plate, adjusting its position until it clicks into place and the bottom of the lock is held in place.
4. Tighten the two pre-installed screws.

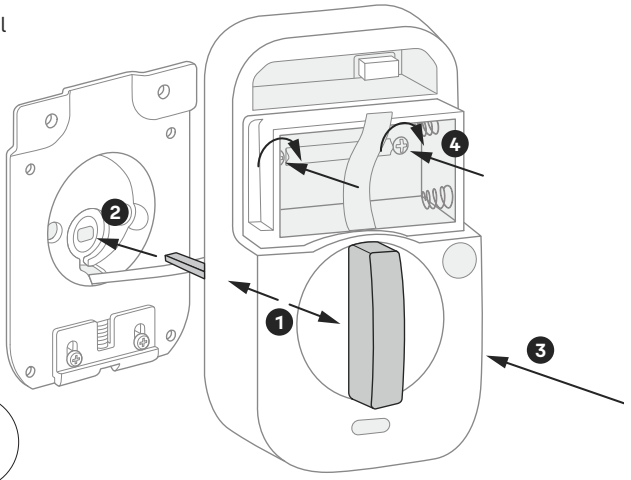

⚠ When fully tightened, lock should be flush to door.

7 Test Thumbturn

If deadbolt latch does not lock or unlock with the **thumbturn** (from the inside):

- Ensure that the deadbolt latch is centered in the face bore hole;
- Ensure that the tailpiece is positioned horizontally and inserted through deadbolt latch slot (**step 6, point 2**).

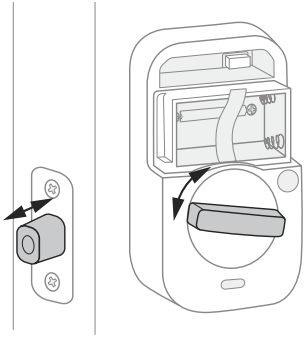

⚠ Smooth deadbolt latch operation will enhance your battery life.

8 Install Yale Smart Module

Insert Yale Smart Module into the designated slot at the top of the body of the lock.

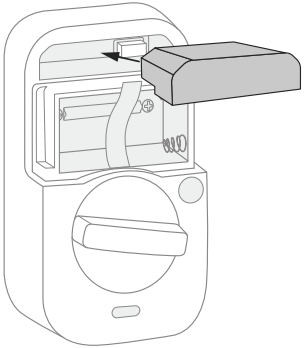

Batteries must **not** be installed when inserting or removing Yale Smart Module.

9 Install Batteries and Replace Cover

1. Before installing batteries, make sure the deadbolt latch is unlocked.

2. Place ribbon behind batteries for easy battery removal.

3. Install 4 batteries.

4. Replace cover.

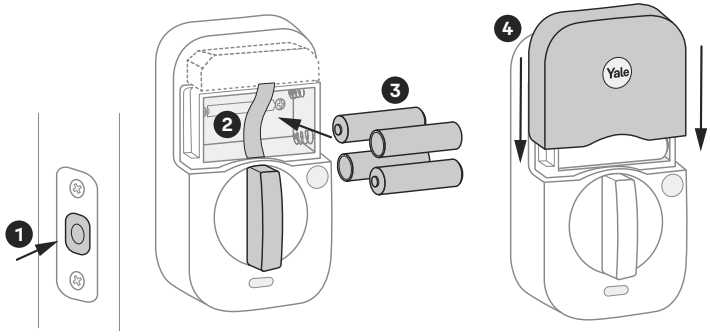

Using Your Lock

Exterior Keypad

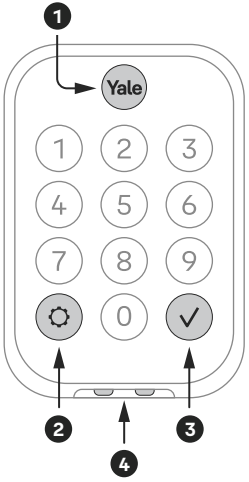

To **lock** your door

Press Yale

To **unlock** your door

Press Yale →

Enter entry code →

Press ✓

Interior Lock

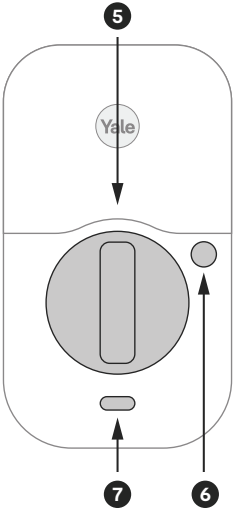

1. **Wake / One-Touch Locking**
2. **Warnings / Menu**
3. **Submit Entry Code**
4. **9-Volt Battery Backup**
   (See page 33 for instructions for if batteries are drained)
5. **Thumbturn**
6. **Passage Button**
7. **Interior LED Indicator**

Configuring Your Lock

1. Press the small black button on the interior of the lock until the 1 and ✿ are illuminated on the keypad

2. Press the 1 followed by the ✿. Enter the settings menu. Enter a 4-8 digit programming code, followed by the ✿. Enter the settings menu. Enter a 4-8 digit programming code. Press ✿.

3. Choose the setting to change. Enter the digit corresponding to the function to be performed.

1	Programming Code Setting	✿	1	Change the programming code	✿	1	Enter a 4 – 8 digit user code	✿
2	User Codes	✿	1	Create User codes	✿	1	Enter a 4 – 8 digit user code	✿
			3	Remove User codes	✿	3	Enter a 4 - 8 digit user code	✿
							Enter 00 to remove all codes	✿✿
3	Advanced Settings	✿	1	Auto Relock	✿	1	Enter a number between 1 – 180 seconds	✿
						3	Turn off	✿
			2	Inside LED	✿	1	Turn on	✿
						3	Turn off	✿
			3	One Touch Locking	✿	1	Turn on	✿
						3	Turn off	✿
			5	Handing the lock	✿			
4	Sound Settings	✿	1	Turn on	✿			
			3	Turn off	✿			
6	All code lock out	✿	1	Turn on	✿			
			3	Turn off	✿			
7	Z-Wave	✿	1	Enroll	✿			
			3	Unenroll	✿			
8	Turn on Bluetooth Advertising	✿						

LED Alerts

Exterior Keypad Alerts	
Gear flashes amber	Low battery level 1
Gear flashes red	Low battery level 2
Gear flashes red, then stays red	Low battery level 3
Checkmark flashes	Pairing success
Any key, then gear flash red	Jammed lock
Gear flashes white	Pairing
Gear flashes red during pairing	Pairing failure

Interior Lock Alerts	
LED indicator flashes blue	Low battery levels 1, 2, and 3
LED indicator flashes red	Locked state
LED indicator flashes green	Unlocked state
LED indicator turns green for 3 seconds	Pairing success
LED indicator turns red for 3 seconds	Pairing failure
LED indicator intermittently flashes yellow	Passage Mode is on (see page 30)

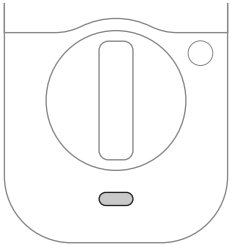

Resetting Your Lock to Factory Defaults

1. Remove one battery.

2. Insert reset pin into the designated reset hole.

3. Press and hold the reset pin.

4. While holding the reset pin, reinsert battery.

5. Keep holding the reset pin for 5 more seconds.

6. Take out the reset pin.

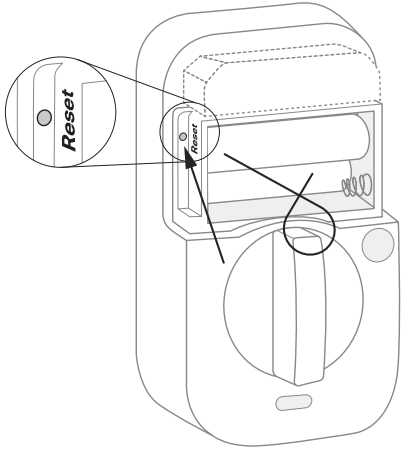

Features

Entry Codes	• Entry codes are used to unlock your door. • 500 entry codes can be created or deleted from the Yale lock or your Z-Wave partner app.
Auto-Lock	• Auto-Lock automatically locks the door for you. • It can be set to lock on a timer for as short as 30 seconds, or as long as 30 minutes.
Passage Mode	• Use passage mode when you want to disable Auto-Lock for an extended period of time. • Simply press and hold the Passage button on the inside of the lock until you hear a chime to turn it on. • To turn passage mode off, lock your door or press and hold the Passage button until you hear a chime.

Lock Operations Troubleshooting

Lock does not respond.	• Press the Yale logo to activate the keypad. • Verify contact with the logo. • If keypad numbers are visible, check if they respond when pressed. • Check batteries are installed and oriented correctly in battery case. Replace batteries* if needed. • Check that the keypad wire is fully connected and not pinched.
Lock is on for a while then shows no reaction. Lights dim.	• Batteries do not have enough power. Replace batteries*.
Lock chimes indicating code acceptance but door will not open.	• Check for any foreign objects between door and frame. • Check that the wire is firmly connected to the interior lock.
Lock operates to allow access but will not automatically unlock.	• Check to see if Auto-Lock is enabled. • Disable Auto-Lock to lock the door manually.
Lock responds "Low Battery".	• Replace all four (4) batteries* with new AA alkaline batteries.
Lock batteries are completely drained.	• Replace all four (4) batteries with new AA alkaline batteries. • If you need to operate the lock from the outside while batteries are drained, place a 9 volt alkaline battery against the contacts at the bottom of the lock. Wait for a moment, then press the logo to wake up the lock and enter your entry code while continuing to hold the battery in place.

Lock Operations Troubleshooting

Entry code will not register.	• If low battery indicator is lit, replace batteries*. • Verify that your entry code consists of 4 to 8 digits. • Make sure you are using different entry codes for different users. • Entry code must be entered while the keypad is active (tap on the Yale logo to wake it up and enter the entry code within 5 seconds).
Upon entering an entry code and pressing the Check key, the lock displays "Invalid Code" error or lock times out without responding.	• Verify entered code is a valid, previously programmed, 4 to 8 digit code. • Turn off vacation mode from the lock's programming menu. This can only be done using the programming code (page 22).
Upon entering an entry code and pressing the Check key, lock responds "Wrong Number of Digits".	• The digits entered were incorrect or incomplete. Re-enter the correct code followed by the Check key.
Deadbolt does not extend when locking the door with the keypad.	• Lock was not handed properly. Find the setting called "Lock Handing" to fix this issue.
Lock operates but makes no sound.	• Turn on the volume from the lock's programming menu. This can only be done using the programming code (page 22).

Hardware Troubleshooting

Deadbolt grinds and will not extend to lock when using an entry code but thumbturn locks and unlocks smoothly.	• Lock was not handed properly. Find the setting called "Lock Handing" to fix this issue.
Deadbolt is hitting the strike plate.	• Reposition the strike plate to align with deadbolt.
Deadbolt is not fully extending.	• Increase depth of the deadbolt strike pocket in the frame.
Resistance when locking deadbolt that requires pushing or pulling on the door to align deadbolt and latch.	Adjust your existing knob, lever, or handleset strike plate. Latch engagement into the strike is the main component used for door alignment. To adjust knob / lever / handleset strike plate: 1. Remove plate from door frame with a hand screwdriver. Note: Using an electric driver may strip screw heads or enlarge screw holes. 2. Locate tab on strike plate. Bend the tab towards surface of strike. Note: A small change may be all that is required. 3. Reinstall strike plate using a screwdriver and test again. 4. If door cannot be adjusted sufficiently with strike tab, both knob/lever/handleset latch and deadbolt could require adjustment – we suggest you contact a local locksmith for assistance. For help with misalignments, watch our door alignment video: US.YaleHome.com/Support

FCC:

FCC ID: 2ABFG-YRD450BLEV1

IC ID: 11626A-YRD450BLEV1

Class B Equipment

This equipment has been tested and found to comply with the limits for a Class B digital device, pursuant to Part 15 of the FCC Rules. These limits are designed to provide reasonable protection against harmful interference in a residential installation. This equipment generates, uses, and can radiate radio frequency energy and, if not installed and used in accordance with the instructions, may cause harmful interference to radio communications. However, there is no guarantee that interference will not occur in a particular installation. If this equipment does cause harmful interference to radio or television reception, which can be determined by turning the equipment off and on, the user is encouraged to try to correct the interference by one or more of the following measures:

- Reorient or relocate the receiving antenna.
- Increase the separation between the equipment and receiver.
- Connect the equipment into an outlet on a circuit different from that to which the receiver is connected.
- Consult the dealer or an experienced radio/TV technician for help.

This product can be operated in any Z-Wave network with other Z-Wave certified devices from other manufacturers. All mains operated nodes within the network will act as repeaters regardless of vendor to increase reliability of the network.

Warning:

Changes or modifications to this device, not expressly approved by **Yale Home** could void the user's authority to operate the equipment.

Innovation, Science and Economic Development Canada:

FCC ID: 2ABFG-YRD450BLEV1
IC ID: 11626A-YRD450BLEV1
This Class A digital apparatus meets all requirements of the Canadian Interference Causing Equipment Regulations.

Yale Home

24/7 Support: 1-855-213-5841 • Support.ShopYaleHome.com

Yale® and Yale Pro® 2 are registered trademarks of Masterlock LLC and its affiliates. Other products' brand names may be trademarks or registered trademarks of their respective owners and are mentioned for reference purposes only. ©Copyright 2023. All rights reserved. Reproduction in whole or in part without the express written permission of Yale Home is prohibited.

Trusted Every Day

P/N YRD604-KF-ZW-0044 Rev A