Product Overview & Specification

U+ Switch enables Light ON/OFF remotely with PUSH buttons and wireless connection (Z-Wave※①).

■Functions
1. Light ON/OFF (PUSH button, Wireless connection)
2. Current capacity : Light power consumption standard

	1 Contact	2 Contact	3 Contact
1 switch	8W~600W	X	X
2 switch	8W~600W	~600W	X
3 switch	8W~600W	~600W	~600W

①Z-Wave : Wireless communications protocol with low-power and low-bandwidth, such as home automation and sensor network

Product figuration and each name

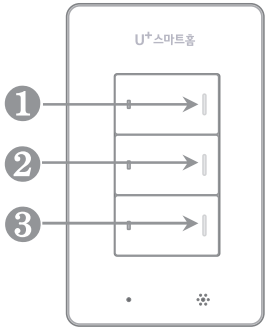

[Front]

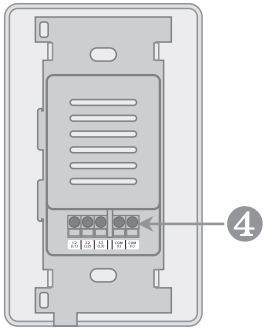

[Rear]

❶ 1st Button : Light connected to 1st light
❷ 2nd Button : Light connected to 2nd light
❸ 3rd Button : Light connected to point 3rd light
❹ Wiring connect socket
· Jack to connect the wiring of light switch
· Terminal sequence

1st (L1)	2nd (L2)	3rd (L3)		COM (L)	COM (L)

▶ 1st(L1) : Line connect terminal to Light #1
▶ 2nd(L2) : Line connect terminal to Light #2
▶ 3rd(L3) : Line connect terminal to Light #3
▶ COM(L): Common line connectors
2 "COM" Connected inside SET

Wiring

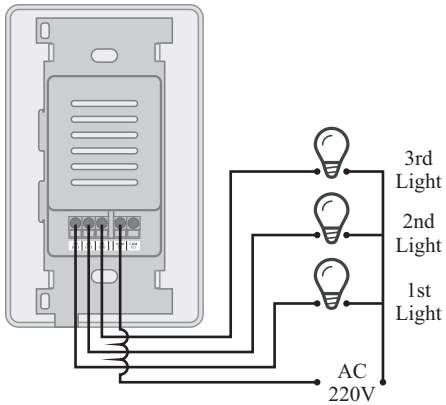

Buttons and LED/Light action

○**When Light ON, LED off**

○**When Light OFF, LED On.**

○**Z-Wave Add / Remove***
▶ Add / Remove by the button in the bottom (3rd Button)
▶ Press the 3rd button for above 5 seconds
- Then, red color LED blinks every 0.5 second 6 times.
- At this time released the button during the red color LED blinking.
- Then, Z-Wave Add / Remove operation is started.
- Over 30 seconds, Add / Remove mode is stopped.

○**Product Reset Instructions**
(*Use this procedure only when the network primary controller is missing or otherwise inoperable.)
1) Hold the low button for 10 seconds.
- Keep holding the button, then at 5 second,red LED of 3rd button is blinking 6 times, and keep holding.
The red LED blinking 6 times after 10 seconds.
When you release your hand, the LED will stop blinking and return to the factory settings
2) After factory reset is done, all the lamps will be turned off and all variables will be initialized to default values.

*"Add" means "Include" the device into the Z-Wave network
*"Remove" means "Exclude" the device from the Z-Wave network.

○**Wake-Up**
The device can be woken up by pressing a button manually or sending a software command. If there is no action within 2s after wake-up, it will re-enter sleep.

Precautions

● Please read the instructions/setup manual before construction/wiring work/operation/repair/check.

● Danger : When mishandled, danger of mortality risks or serious injury.

● Caution : When mishandled, possibility of slight injury or property damage.

Danger
(1) Before installing the product, be sure to shut circuit breaker OFF to cut off the power. Danger of electric shock during install.
(2) Be sure to attach barrier to the part of power side. If not, danger of short accident.
(3) Be sure not to contact exposed terminal. Cause of short-circuit and electric shock.
(4) If the circuit breaker operated automatic shutoff, please be sure to remove the cause before turning on the power. Electric shock or fire may occur.

● Cautions
(1)Be sure to read this instructions before product install, and follow instruction when installing..
(2) There is a risk of malfunctions and accidents caused by improper installation. Installation and maintenance of the circuit breaker should be done by a qualified person .
(3)Avoid circumstances including rainwater· oil ·dust ·sunlight, etc.. Danger of electric shock, short circuit, fire, malfunctions.
(4) Connect to a power source in accordance with the rated power of the product. If not, may cause a unit malfunction and failure.
(5) Because the operating current is changed according to the mounting angle of the product, install the product and the wall is to be perpendicular to the ground
(6)Be sure not to drop and break the product during handling and installation
(7) Damage or dismantle caused by user carelessness would not be guaranteed.
(8) For detailed information, you may refer to the catalogue or visit our website at www.3nodacousticlink.net or contact our representative contact number.

Z-Wave supplementary Information

○**Compatibilities**

This product can be operated in any Z-Wave network with other Z-Wave certified devices from other manufacturers.
All mains operated nodes within the network will act as repeaters regardless of vendor to increase reliability of the network.

○**Security**

- Authenticated S2 Security

*Security (S2) enabled Z-Wave controller must be used to fully utilize the product.

○**Following is the product's Association Group information**

Association groups for Root Device:

Association Groups Availablein Switch Binary:Root Device

Group ID	Name	Maximum Nodes	Description
1	Lifeline	5	Supports the following commands: • Device Reset Locally Report: triggered upon reset • Notification Report: triggered when re-apply power • Multilevel Sensor Report: triggered during periodic reporting • Switch Binary Report: triggered by the endpoints • Battery Report: triggered when low battery warns

Association groups for Endpoint 1:

Association Groups Available in Switch Binary:Endpoint 1

ID	Name	Node count	Description
1	Lifeline	0	Mirror of root device,but without node count.

Association groups for Endpoint 2:

Association Groups Available in Switch Binary:Endpoint 2

ID	Name	Node count	Description
1	Lifeline	0	Mirror of root device,but without node count.

Association groups for Endpoint 3:

Association Groups Available in Switch Binary:Endpoint 3

ID	Name	Node count	Description
1	Lifeline	0	Mirror of root device,but without node count.

○**Notification Command Class**

Type name	Type ID	Event name	Event ID	Event Value
Heat	4	Over heat	2	
		Rapid rise of temperature	4	
		Under heat	6	
System	9	Count of relay operation	4	Event Parameters Length : 0x0A Event Parameter 1 : 00 (none), 01 (HW reboot), 02 (SW reboot) Event Parameter 2 : count of relay1 on/off (MSB) Event Parameter 3 : count of relay1 on/off Event Parameter 4 : count of relay1 on/off (LSB) Event Parameter 5 : count of relay2 on/off (MSB) Event Parameter 6 : count of relay2 on/off Event Parameter 7 : count of relay2 on/off (LSB) Event Parameter 8 : count of relay3 on/off (MSB) Event Parameter 9 : count of relay3 on/off Event Parameter 10 : count of relay3 on/off (LSB)

• If the cavity temperature of DUT is greater than 70℃ and less than 80℃ (during check 30 sec), the DUT will send a Notification Reoprt (Notification Type: 0x04, Event: 0x04) to the PC Controller. If the temperature is over 80℃ (during check 30 sec), the DUT will send a Notification Reoprt (Notification Type: 0x04, Event: 0x02) to the PC Controller. And then if the temperature drops to less than 65℃, the DUT will send a Notification Reoprt (Notification Type: 0x04, Event: 0x06) to the PC Controller.

○**Configuration Command Class**

Parameter Number	Size	Range of value	Default value	Description
1	2	60~3600	600	Time period of Multilevel Sensor Report by second
2	1	10~30	20	Sensitivity of temperature report by Celsius x10
3	1	5~20	10	Sensitivity of humidity report by percent

• Operation of Configuration CC based on LGU+ Software specification.

- If setting values are out of range (when setting these values by using CONFIGURARION_SET command), setting values are ignored. (CONFIGURARION_SET command is valid if input parameters meet above condition.)

Z-Wave supplementary Information

○**Command Classes**

Command Class	Version	Required Security Class
Association	2	Highest Granted Security Class
Association Group Info	3	Highest Granted Security Class
Basic	2	Highest Granted Security Class
Battery	1	Highest Granted Security Class
Configuration	4	Highest Granted Security Class
Device Reset Locally	1	Highest Granted Security Class
Firmware Update Meta Data	5	Highest Granted Security Class
Indicator	3	Highest Granted Security Class
Manufacture Specific	2	Highest Granted Security Class
Multi Channel	4	Highest Granted Security Class
Multi Channel Association	3	Highest Granted Security Class
Notification	8	Highest Granted Security Class
Powerlevel	1	Highest Granted Security Class
Security 0	1	None
Security 2	1	None
Sensor Multilevel	5	Highest Granted Security Class
Supervision	1	None
Switch Binary	2	Highest Granted Security Class
Transport Service	2	None
Version	3	Highest Granted Security Class
Z-Wave Plus Info	2	None

○**SmartStart**

SmartStart enabled products can be added into a Z-Wave network by scanning the Z-Wave QR Code present on the product with a controller providing SmartStart inclusion. No further action is required and the SmartStart product will be added automatically within 10 minutes of being switched on in the network vicinity.

○**Label and QR CODE**

The label and the QR code are sticked to the side(opposite side of the USB port) of the case. DSK is included in the QR code.

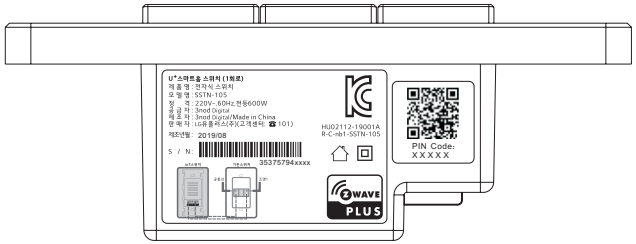

○**DSK**

The DSK code can be found on the DSK label which is attached on the packaging box.

○**Super capacitor**

The switch use a super capacitor as a power supply to provide power for the device. The super capacitor must be fully charged before the switch is used for the first time.
In addition, the switch is integrated with an AC-DC power supply, which is used to charge the super capacitor to ensure that the capacitor has sufficient power during normal use.