Recessed Door Sensor 7

Engineering Specification

Recessed Door Sensor 7

Document No.	SPEC-ZW187
Description	This document mainly introduces the new generation AEOTEC Recessed Door Sensor. The content mainly includes its interfaces, accessories, features, specifications, quick start, and software function definition. Recessed Door Sensor 7 is a Z-Wave Plus v2 device with many advantages. ● Can be embedded inside the wooden door or window. ● When Magnet is away or near, it will send out notification via Group 1 (Lifeline) or control other Z-Wave device directly via Group 2. ● Support SmartStart, which makes inclusion more convenient. ● Support S2, which makes it more secure and reliable.
Written By	
Date	
Reviewed By	
Date	
Approved By	
Date	

Table of Content

1 INTERFACES & ACCESSORIES 1

2 FEATURES & SPECIFICATIONS 2

2.1 Structural Characteristics 2

2.2 Hardware Characteristics 2

2.3 Software Characteristics 2

3 PRODUCT QUICK START 4

3.1 Important safety information 4

3.2 Optimally placing the product 4

3.3 How to install the product 5

3.4 How to add the product into Z-Wave network 5

3.5 How to remove the product from Z-Wave network 6

3.6 How to factory reset 7

4 SOFTWARE FUNCTION DEFINITION 8

4.1 User Behavior Interaction 8

4.2 Supported Command Classes 10

4.3 Basic Command Class mapping 10

4.4 Z-Wave Plus Info 10

4.5 Manufacturer Specific 10

4.6 Version 11

4.7 Association Group Info 11

4.8 Notification 11

4.9 Binary Sensor 11

4.10 Wake Up 11

4.10.1 Wake Up Interval Capabilities Report 11

4.10.2 Manual Wake Up triggered by a user activation 12

4.11 Battery 12

4.12 Indicator 12

4.13 Configuration 12

1 INTERFACES & ACCESSORIES

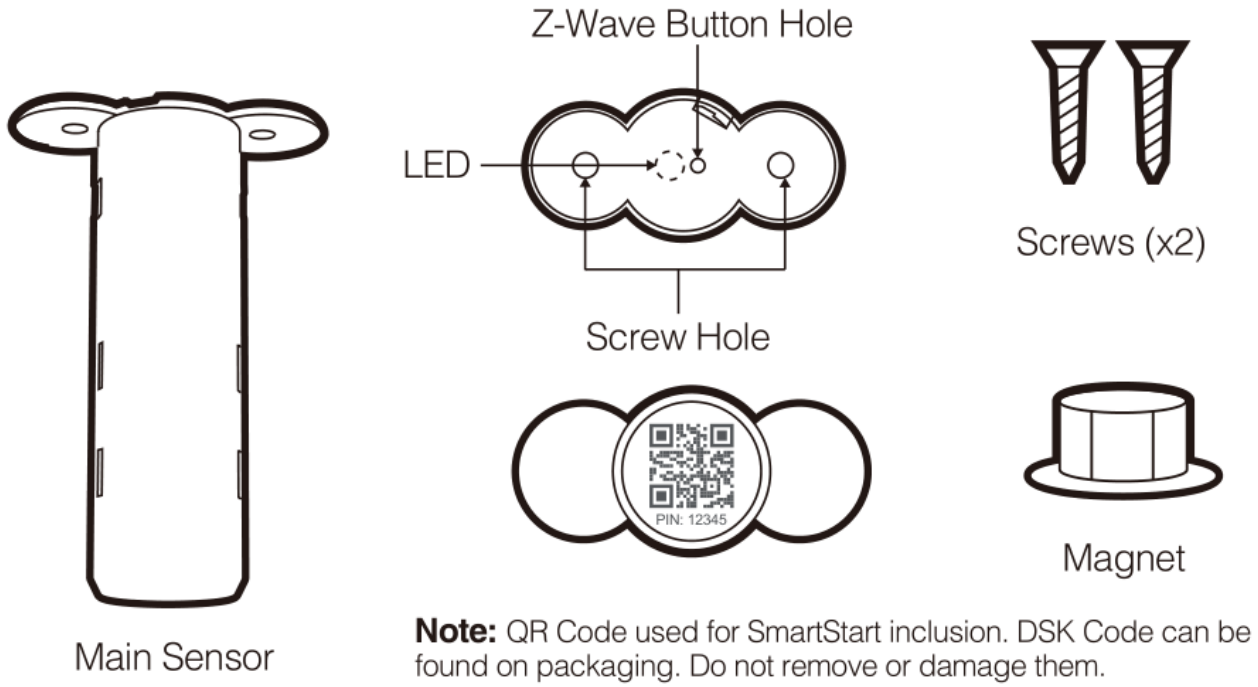

Terminology	Description
Action Button	Inside the Z-Wave Button Hole. Used for networking and resetting.
LED	Used for indicating the current state of the product.
Magnet	Change the sensor state via making the Magnet away or near from Main Sensor.

2 FEATURES & SPECIFICATIONS

2.1 Structural Characteristics

Parameter	Value
Product Identifier	ZW187
Dimensions	Main Sensor: Φ19.2×64mm Magnet Sensor: Φ22×13mm
Weight	Main Sensor: 20g Magnet Sensor: 7g
Color	White
Shell Material	ABS
Shell Fire-proof Level	UL94 V-0
Waterproof and Dustproof	Rated IP20 under IEC 60529
Usage	For indoor use. Can be embedded inside the wooden door or window.
Operating Temperature	32~104°F (0~40°C)
Relative Humidity	8%~80%

2.2 Hardware Characteristics

Parameter	Value
Z-Wave Module	ZGM130S037HGN1
Z-Wave TX Power	Max: 13dBm
Effective Radiated Power	-0.310dBm
Z-Wave Antenna Distance	40m (Indoor) /150m (Outdoor)
Indicator Light Color	Red
Buttons and Connectors	Action Button (x1), Magnet(x1)
Input Voltage	3.0V Lithium battery
Battery Included	Yes. 1pcs battery included.
Battery Required	Yes. 1pcs battery required.
Battery Info	Model: CR2 Capacity: 800mAh Detachable: Yes Chargeable: No Endurance: 2 years
Working Current	30mA
Standby Current	10uA (Inside the Z-Wave network) / 50uA(Outside the Z-wave network)
Maximum Standby Power Consumption	0.03mW
Built-in Sensors	Reed switch
Safety Certifications	CE

2.3 Software Characteristics

Parameter	Value
Wireless Technology	Z-Wave
Certification Type	Z-Wave Plus v2 Certification
Z-Wave SDK Version	7.11.0.GA (7.11)
Z-Wave Library Type	Enhanced 232 Slave
Z-Wave Role Type	ZWAVEPLUS_INFO_REPORT_ROLE_TYPE_SLAVE_SLEEPING_REPORTING (0x06)
Generic Device Type	GENERIC_TYPE_SENSOR_NOTIFICATION (0x07)
Specific Device Type	SPECIFIC_TYPE_NOTIFICATION_SENSOR (0x01)
Security Class	Non-Security, S0, S2 Unauthenticated, and S2 Authenticated

SmartStart Compatible	Support. After powering on, SmartStart is auto activated.
Over The Air (OTA)	Support. Firmware can be updated via RF.
Multi Channel Device	No
Association	Support. Refer to Section 4.7 Association Group Info.
Factory Reset	Support. Refer to Section 3.6 How to factory reset.
Power-down Memory	Support. All command settings will stay unchanged even power down.
Timed battery report	Support. Refer to Configuration Parameter 101.
Low battery warning	Support. Refer to Configuration Parameter 90.
Sensor State Report	Support. When Magnet is away or near, send out notification via Group 1.
Control other device	Support. When Magnet is away or near, control other Z-Wave device directly via Group 2.

3 PRODUCT QUICK START

3.1 Important safety information

Please read this Engineering Specification carefully for correct and effective use.

Failure to follow the recommendations set forth by AEOTEC Limited may be dangerous or cause a violation of the law. The manufacturer, importer, distributor, and/or reseller will not be held responsible for any loss or damage resulting from not following any instruction in this guide or in other materials.

Recessed Door Sensor 7 is intended for indoor use in dry locations only. Do not use in damp, moist, and /or wet locations. Contains small parts; keep away from children.

3.2 Optimally placing the product

Recessed Door Sensor 7 has been designed to be installed within a door and its surrounding frame. To optimally install it, please note the following.

Recessed Door Sensor 7 must be installed so that its two parts separate when the door it is installed within is opened.

Typically, the larger part is installed in the door itself, while the smaller part is installed in the surrounding frame. This is not mandatory, however, and the installation can be reversed provided the drill hole instructions are suitably adapted.

As a magnetic sensor utilising wireless communication, Recessed Door Sensor 7 may not optimally work when mounted on a metal frame or close to metal objects such as door locks. Test accordingly before mounting Recessed Door Sensor 7 with adhesive tape or screws.

To be installed, Recessed Door Sensor 7 requires a minimum spacing of around 1mm / 0.04inch between the door and its frame when closed. The gap should be no larger than 12mm / 0.47inch.

When the door is closed and the sensor's two parts are installed, they should align.

Owing to both the magnet and the Z-Wave Plus antenna housed with Recessed Door Sensor 7, the two highlighted areas in this diagram are generally considered optimal.

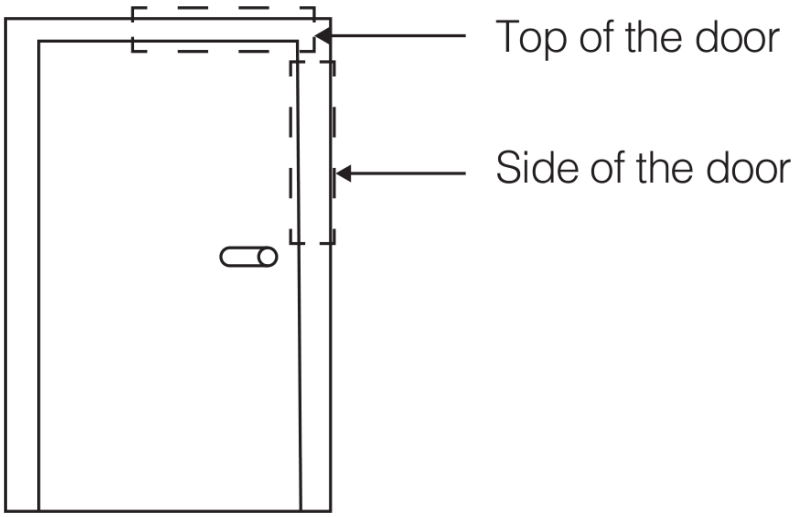

Diagram 1; optimal placement locations.

3.3 How to install the product

The following extra things are needed for the installation: screwdriver, 19mm wide drill bit, drill driver, PVA glue, rubber hammer.

1. Drill a hole 65mm / 2.56inch deep in your door at the selected location with a 19mm / 0.75inch wide drill bit.

2. Drill a hole 15mm / 0.59inch deep in your doorframe at the corresponding location with a 19mm / 0.75inch wide drill bit.

3. Insert sensor into the hole you drilled in the door. If it requires force to push the sensor, expand the drill hole accordingly. Secure the sensor with two of the provided screws.

4. Place a small amount of white PVA glue inside of the hole you drilled in the doorframe. Insert the magnet into the hole. If it requires force to insert, it can typically be tapped into place with a rubber hammer.

3.4 How to add the product into Z-Wave network

The following will step you through connecting the product to your Z-Wave network.

Note:

This product supports Security 2 Command Class. While a Security S2 enabled Controller is needed in order to fully use the security feature. This product can be operated in any Z-Wave network with other Z-Wave certified devices from other manufacturers. All mains operated nodes within the network will act as repeaters regardless of vendor to increase reliability of the network.

QR Code is used for SmartStart inclusion. DSK Code can be found on packaging. Do not remove or damage them. SmartStart enabled products can be added into a Z-Wave network by scanning the Z-Wave QR Code present on the product with a controller providing SmartStart inclusion. No further action is required and the SmartStart product will be added automatically within 10 minutes after this product being powered on in the network vicinity.

1. Press the sensor latch with a slotting screwdriver to remove the lid of the sensor.

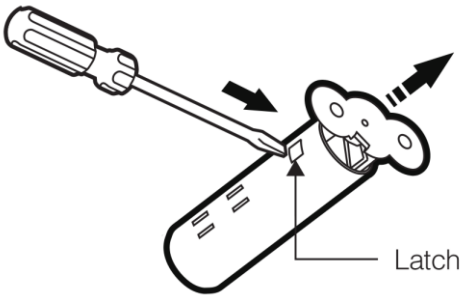

Diagram 2.

2. Squeeze the sides of the sensor casing to alleviate pressure on the chipboard; slide the chipboard out.

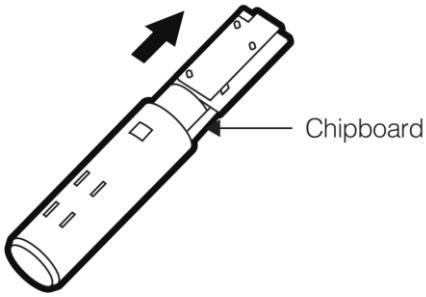

Diagram 3.

3. Remove the Pull Tab to engage the pre-installed battery. The sensor’s LED will fade the color red in and out for a few seconds to indicate that it’s powered on.

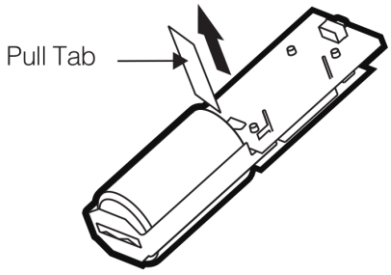

Diagram 4.

4. To connect Recessed Door Sensor 7 to your automation network;

a. If your Z-Wave gateway supports SmartStart, scan Recessed Door Sensor 7's QR Code using your gateway's app. Once scanned, Recessed Door Sensor 7 will join your Z-Wave network automatically within 10 minutes.

b. Else, set your gateway into its 'add device' mode. Refer to its manual if you are unsure of how to perform this step. Then press Recessed Door Sensor 7's Action Button once; its LED will blink.

If your gateway supports S2 security, and you want your device to use this higher level of security, please enter the first 5 digits of the DSK into the gateway's interface when prompted. Refer to the gateway's manual if you are unsure how to perform this step. Do not lose the DSK or remove it from the product or package.

5. When Recessed Door Sensor 7 successfully joins your Z-Wave network its LED will turn solid red for 10 minutes and then off. If fails, its LED turns slow fade-in fade-out red color. Repeat the above steps and please contact us for further support if needed.

6. Squeeze the sides of the sensor casing lightly again and re-insert the chipboard as it was. Re-attach the lid.

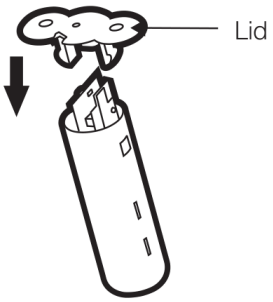

Diagram 5.

Recessed Door Sensor 7 is now a part of your Z-Wave home control system. You can configure it and its automations via your Z-Wave system; please refer to your software's user guide for precise instructions.

3.5 How to remove the product from Z-Wave network

1. Set your Z-Wave Controller into its 'Remove Device' mode in order to remove the product from your Z-Wave system. Refer to the Controller's manual if you are unsure of how to perform this step.

2. Make sure the product is powered.

3. Single-click Action Button; LED will become flash red color for 5 seconds, which indicates entering exclusion mode.

4. If the exclusion is successful, LED will change to the default unpaired state which is slow fade-in fade-out red color.

5. Should its LED extinguish without slow fade-in fade-out red color, it indicates the exclusion is unsuccessful. Contact us for further support if needed.

3.6 How to factory reset

If the primary controller is missing or inoperable, you may need to reset the device to factory settings.

Make sure the product is powered. To complete the reset process manually, press and hold the Action Button for at least 20s, and release the Action Button when LED becomes solid red color, then Factory Reset is performed. Slow fade-in fade-out red LED color indicates the reset operation is successful. Contact us for further support if needed.

Note:

1. This procedure should only be used when the primary controller is missing or inoperable.

2. Factory Reset will:

(a) Remove the product from Z-Wave network;

(b) Delete the Association setting;

(c) Restore the configuration settings to the default.

4 SOFTWARE FUNCTION DEFINITION

4.1 User Behavior Interaction

User behavior	Out of the Z-Wave network	In the Z-Wave network
Power OFF	Cut the power.	Cut the power.
Power ON	**Send Inclusion Requests for SmartStart.** When device is powered on, LED becomes slow fade-in fade-out red color for 10 seconds, which means it's out of the Z-Wave network. SmartStart inclusion starts after device is powered on, and LED changes to a fast red blink after controller beginning to response to its SmartStart inclusion request. If inclusion is successful, LED will become solid red color for 10 minutes and then off, or goes into sleep immediately if receiving the Wake Up No More Information from the gateway. Should its LED go back to slow fade-in fade-out red color for 10 seconds, it indicates inclusion is unsuccessful. Device will auto-reset and then activate SmartStart again.	**Send Inclusion Requests for SmartStart.** When re-power on, LED will bright red color, which means it's in the Z-Wave network. **Send Battery Report.** When re-power on, Battery Report with current battery level will issue via Lifeline. **Send Wake Up Notification.** When re-power on, Wake Up Notification will be issued, and the Wake Up destination is according to the Wake Up Interval Set. The Wake Up period starts when the node issues a Wake Up Notification and it ends either 10 seconds after the last received/transmitted frame or at the reception of a Wake Up No More Information Command by the Wake Up destination.
Make Magnet away or near	**Reversed.** LED will NOT flash.	**Trigger Association function.** Whether LED will flash red color or not is determined by Configuration Parameter 81. Refer to Section 4.7 and 4.13 for details about Association function definition.
Single-click Action Button	**Send Node Info for Classic Learn Mode (Inclusion/Adding).** When single-click Action Button, LED starts fast blinking red color for 30s, which indicates entering inclusion mode. If inclusion is successful, LED will become solid red color for 10 minutes and then off, or goes into sleep immediately if receiving the Wake Up No More Information from the gateway. Should its LED go back to slow fade-in fade-out red color for 10 seconds, it indicates inclusion is unsuccessful. Device will auto-reset and then activate SmartStart again. **Exit Classic Learn Mode (Inclusion/Adding).** If Action Button is clicked again during the Classic Learn Mode, the inclusion will exit. At the same time, LED will go back to slow fade-in fade-out red color for 10 seconds. Device will auto-reset and then activate SmartStart Learn Mode again.	**Send Node Info for Classic Learn Mode (Exclusion/Removing).** When single-click Action Button, LED will become a flashing red color for 5 seconds, which indicates entering exclusion mode. If the exclusion is successful, LED will change to the default unpaired state which is slow fade-in fade-out red color. Should its LED extinguish without slow fade-in fade-out red color, it indicates the exclusion is unsuccessful. **Exit 10 Minutes Awake Mode.** If the product is in the 10 Minutes Awake Mode, it will goes into sleep immediately when single-click Action Button, and LED will extinguish. **Exit Testing Power Level function.** If the product is manually triggered to testing communication quality, it will exit Testing Power Level function when single-click Action Button, and LED will extinguish.
Press and hold Action Button for [1, 2s)	**Reserved.**	**Reserved.** LED is OFF when Action Button is pressed or released.
Press and hold Action Button for [2, 5s)	**Reserved.**	**Issue Wake Up Notification and stay awake for 10 minutes unless put to sleep by Wake**

		Up No More Information frame, that is, 10 Minutes Awake Mode. LED will become slow pulsing red color when Action Button is pressed, and become solid red color for 10 minutes when released and then off, or goes into sleep immediately if receiving the Wake Up No More Information CC frame from the gateway. **Exit 10 Minutes Awake Mode** If the product is in the 10 Minutes Awake Mode, it will goes into sleep immediately when press and hold Action Button for [2,5s], and LED will extinguish.
Press and hold Action Button for [5, 10s)	**Reserved.**	**Testing Power Level function.** LED will become faster pulsing red color when Action Button is pressed, and become flash pulsing red color when released, indicating that testing signal strength to gateway has started. After the testing is complete: a. If the transmission quality is good: the LED will change to be solid ON state for 3 seconds and then off. b. If the transmission quality is weak: the LED will change to slowly blink for 3 seconds and then off. Note: If want to exit Testing Power Level function, please single-click Action Button.
Press and hold Action Button for [10, 20s)	**Reserved.**	**Reserved.** LED will flash even faster pulsing red color when Action Button is pressed, and extinguish when released.
Press and hold Action Button for [20, ∞)	**Reserved.**	**Factory Reset.** To complete the reset process manually, press and hold the Action Button for at least 20s, and release the Action Button when LED becomes solid red color, then Factory Reset is performed. The device will issue a Device Reset Locally Command via its Lifeline to notify the Lifeline destination that the device has been reset to its factory default state. And it will perform the reset operation regardless of whether or not the delivery of the Device Reset Locally Notification is successful. LED will become slow fade-in fade-out red color, which indicates the reset operation is completed. Otherwise, please try again.

4.2 Supported Command Classes

In order to increase interoperability with legacy controlling nodes, this device can reply to Manufacturer Specific Get Commands received non-securely if it was granted the S0 network key as its highest Security Class.

Command Class	Version	Required Security Class
ZWAVEPLUS_INFO	2	None
ASSOCIATION	2	Highest granted Security Class
MULTI_CHANNEL_ASSOCIATION	3	Highest granted Security Class
ASSOCIATION_GRP_INFO	3	Highest granted Security Class
TRANSPORT_SERVICE	2	None
VERSION	3	Highest granted Security Class
MANUFACTURER_SPECIFIC	2	Highest granted Security Class
DEVICE_RESET_LOCALLY	1	Highest granted Security Class
INDICATOR	3	Highest granted Security Class
POWERLEVEL	1	Highest granted Security Class
BATTERY	1	Highest granted Security Class
SENSOR_BINARY	2	Highest granted Security Class
CONFIGURATION	4	Highest granted Security Class
SECURITY	1	None
SECURITY_2	1	None
NOTIFICATION	8	Highest granted Security Class
WAKE_UP	2	Highest granted Security Class
SUPERVISION	1	None
FIRMWARE_UPDATE_MD	5	Highest granted Security Class
APPLICATION_STATUS	1	None

4.3 Basic Command Class mapping

Basic CC does not map to any Command Class.

4.4 Z-Wave Plus Info

Parameter	Value
Z-Wave Plus Version	2
Role Type	6 (ZWAVEPLUS_INFO_REPORT_ROLE_TYPE_SLAVE_SLEEPING_REPORTING)
Node Type	0 (ZWAVEPLUS_INFO_REPORT_NODE_TYPE_ZWAVEPLUS_NODE)
Installer Icon Type	0x0C06 (ICON_TYPE_SPECIFIC_SENSOR_NOTIFICATION_ACCESS_CONTROL)
User Icon Type	0x0C06 (ICON_TYPE_SPECIFIC_SENSOR_NOTIFICATION_ACCESS_CONTROL)

4.5 Manufacturer Specific

Parameter	Value
Manufacturer ID 1	0x03
Manufacturer ID 2	0x71
Product Type ID 1	0x00 (EU)
Product Type ID 2	0x02 (PRODUCT_TYPE_ID_SENSOR)
Product ID 1	0x00
Product ID 2	0xBB (187)

4.6 Version

Parameter	Value
Z-Wave Protocol Library Type	0x03
Z-Wave Protocol Version	0x07
Z-Wave Protocol Sub Version	0x0B
Firmware 0 Version	Z-Wave Chip Major Firmware Version
Firmware 0 Sub Version	Z-Wave Chip Minor Firmware Version
Hardware Version	0xBB (187)
Number of firmware targets	0x00

4.7 Association Group Info

Root device

ID	Name	Node count	Profile	Function
1	Lifeline	5	General: Lifeline	**Device Reset Locally Notification:** Issued when Factory Reset is performed. **Battery Report:** Issued periodically to report the current battery level; Issued when battery becomes low. **Sensor Binary Report:** Issued when Magnet is away or near. **Notification Report (Type=0x06; Event=0x16):** Issued when sensor state is changed to be Open Status. **Notification Report (Type=0x06; Event=0x17):** Issued when sensor state is changed to be Close Status. **Notification Report (Type=0x08; Event=0x01):** Issued when battery voltage change exceeds 20%. **Notification Report (Type=0x09; Event=0x04;Param=0x55):** Issued when reset due to Watch-Dog Timeout.
2	On/Off control (Access)	5	Notification: Access Control	**Basic Set:** Issued when Magnet is away or near.(The Basic Set Value is determined by Configuration Parameter 3)

4.8 Notification

Notification Type		Notification Events		Description
Access Control	0x06	Window/Door is open	0x16	Open Status.
		Window/Door is closed	0x17	Close Status.
Power Management	0x08	Power has been applied	0x01	Battery voltage change exceeds 20%.
System	0x09	System software failure (manufacturer proprietary failure code provided)	0x04	Event/State Parameter=0x55: Reset due to Watch-Dog Timeout.

4.9 Binary Sensor

Sensor Type		Sensor Value	Description
Door/Window	0x0A	0xFF	Open Status.
		0x00	Close Status.

4.10 Wake Up

4.10.1 Wake Up Interval Capabilities Report

Parameter	Value	Time
Min Wake Up Interval Seconds	0x0000F0	240s (4 minutes)

Max Wake Up Interval Seconds	0xFFFFF0	16777200s
Default Wake Up Interval Seconds	0x000E10	3600s (1 hour)
Wake Up Interval Step Seconds	0x0000F0	240s (4 minutes)

4.10.2 Manual Wake Up triggered by a user activation

When re-power on, Wake Up Notification will be issued, and the Wake Up destination is according to the Wake Up Interval Set. The Wake Up period starts when the node issues a Wake Up Notification and it ends either 10 seconds after the last received/transmitted frame or at the reception of a Wake Up No More Information Command by the Wake Up destination.

If press and hold the Action Button for 2s and release the Action Button when the LED becomes slow pulsing red color, Wake Up Notification will also be issued, and the Wake Up destination is according to the Wake Up Interval Set. It will stay awake for 10 minutes after issuing Wake Up Notification, or goes into sleep immediately if receives Wake Up No More Information.

4.11 Battery

1. If send Battery Get to the device, it will issue Battery Report with current battery level to the requester when waked up.

2. If re-power on, it will issue Battery Report with current battery level via Lifeline.

3. If waked up, it will detect battery level, and issue Battery Report (Value=0xFF) via Lifeline when battery level is less than or equal to threshold.

4. The 2.85V or more battery voltage corresponds to 100% battery level, and 2.6V or less corresponds to 0%.

4.12 Indicator

Indicator ID		Property ID	
Node Identify	0x50	On Off Period	0x03
		On Off Cycles	0x04
		On time within an On/Off period	0x05

4.13 Configuration

Note: No Bulk Support equals to True. ***It will return an Application Rejected Request Command when receiving Configuration Bulk Set or Get (if received without Supervision encapsulation).*** It will reset all its configuration parameters if either manually reset to factory default or receives a Configuration Default Reset Command. It will NOT modify or reset any configuration parameter when being included or excluded of a Z-Wave network.

Parameter	0x01 (1)			
Name	Binary Sensor Report			
Info	Enable/Disable Binary Sensor Report			
Properties	Size	1	Min Value	0
	Format	Unsigned Integer	Max Value	1
	Read-only	False	Default Value	0
	Altering capabilities	False	Advanced	False
Description	Allow for backward compatibility to report Binary if Notification Report cannot be used for status changes.			
	Value	Function		
	0	Disable. Sensor Binary Report will NOT be issued via Lifeline when Magnet is away or near.		
	1	Enable. Sensor Binary Report will be issued via Lifeline when Magnet is away or near.		

Parameter	0x02 (2)			
Name	Sensor Reports			
Info	Reverse Sensor Reports			
Properties	Size	1	Min Value	0
	Format	Unsigned Integer	Max Value	1
	Read-only	False	Default Value	0
	Altering capabilities	False	Advanced	False
Description	Reverse both Sensor Binary Report and Notification Report.			
	Value	Function		
	0	Open Status when Magnet is away, Close Status when magnet is near.		
	1	Close Status when Magnet is away, Open Status when magnet is near.		

Parameter	0x03 (3)			
Name	Association Group 2 Settings			
Info	Configure the Basic Set value			
Properties	Size	1	Min Value	0
	Format	Unsigned Integer	Max Value	6
	Read-only	False	Default Value	1
	Altering capabilities	False	Advanced	False
Description	Determine the Basic Set value to control other Z-Wave devices directly when Magnet is away or near.			
	Value	Function		
	0	Disable completely.		
	1	Send Basic SET 0xFF when Magnet is away, and send Basic SET 0x00 when Magnet is near.		
	2	Send Basic SET 0x00 when Magnet is away, and send Basic Set 0xFF when Magnet is near.		
	3	Only send Basic SET 0xFF when Magnet is away.		
	4	Only send Basic SET 0x00 when Magnet is near.		
	5	Only send Basic SET 0x00 when Magnet is away.		
	6	Only send Basic SET 0xFF when Magnet is near.		

Parameter	0x04 (4)			
Name	Application Layer Retry			
Info	Configure retry number and wait time			
Properties	Size	2	Min Value	0
	Format	Unsigned Integer	Max Value	0x05FF
	Read-only	False	Default Value	0
	Altering capabilities	False	Advanced	True
Description	The device supports an application retry mechanism when the application of the device has detected a transmission error when ***Basic Set, Sensor Binary Report or Notification Report (Access Control)*** message is sent out but fails to result in an ACK or a Supervision Report.			
	Value	Function		
	Byte 1	Configure the number of retries. The valid value is 0-5. 0 means disable retry.		
	Byte 2	Configure the wait time between retries. The valid value is 0-255. Unit is 100ms.		

Parameter	0x05 (5)			
Name	Supervision Report Wait Time			
Info	Configure Supervision Report Wait Time			
Properties	Size	1	Min Value	1
	Format	Unsigned Integer	Max Value	50(0x32)

	Read-only	False	Default Value	15(0x0F)
	Altering capabilities	False	Advanced	True
Description	Configure Supervision Report Wait Time			
	Value	Function		
	1-50	Configure Supervision Report Wait Time. Unit is 100ms. Note: Issuing Basic Set, Sensor Binary Report or Notification Report(Access Control) via association groups uses Supervision encapsulation only if sending commands with S2(or higher security) encapsulation. In other word, this parameter can be configured in any network, but works only in S2 (or higher security) network.		

Parameter	0x51 (81)			
Name	LED Indicator			
Info	Control LED Indicator			
Properties	Size	1	Min Value	0
	Format	Unsigned Integer	Max Value	3
	Read-only	False	Default Value	3
	Altering capabilities	False	Advanced	False
Description	Determine whether the LED flash or not when sending Basic Set, Sensor Binary Report, Notification Report (Access Control) or Wake Up Notification.			
	Value	Function		
	0	Completely disable LED.		
	1	LED quickly flashes only when sending Basic Set, Sensor Binary Report or Notification Report (Access Control).		
	2	LED activates only when sending Wake Up Notification.		
	3	LED quickly flashes when sending Basic Set, Sensor Binary Report or Notification Report (Access Control), and activates when sending Wake Up Notification.		

Parameter	0x5A (90)			
Name	Low battery threshold			
Info	Configure the low battery threshold			
Properties	Size	1	Min Value	10(0x0A)
	Format	Unsigned Integer	Max Value	50(0x32)
	Read-only	False	Default Value	30(0x1E)
	Altering capabilities	False	Advanced	False
Description	Induce battery report when battery level is less than or equal to threshold. Forward low battery report.			
	Value	Function		
	10-50	10%-50%.		

Parameter	0x65 (101)			
Name	Timed battery report			
Info	Set how often battery is reported			
Properties	Size	2	Min Value	1
	Format	Unsigned Integer	Max Value	14400(0x3840)
	Read-only	False	Default Value	70(0x0046)
	Altering capabilities	False	Advanced	False
Description	Set how often battery is reported in minutes.			
	Value	Function		
	1-14400	Set how often battery is reported in minutes.		