Recessed Door Sensor 7

Table of Content

1 OVERVIEW 1

2 SPECIFICATIONS 2

2.1 Structural 2

2.2 Hardware 2

2.3 Software 2

3 QUICK START 4

3.1 Important safety information 4

3.2 Optimally placing the product 4

3.3 How to install the product 5

3.4 How to add the product 5

3.5 How to remove the product 7

3.6 How to manually trigger Wake Up 7

3.7 How to test the transmission quality 7

3.8 How to factory reset 8

4 SOFTWARE FUNCTION DEFINITION 9

4.1 Supported Command Classes 9

4.2 Basic Command Class mapping 9

4.3 Z-Wave Plus Info 9

4.4 Manufacturer Specific 9

4.5 Version 10

4.6 Association Group Info 10

4.7 Notification 10

4.8 Binary Sensor 10

4.9 Wake Up 10

4.10 Battery 11

4.11 Indicator 11

4.12 Configuration 11

1 OVERVIEW

Recessed Door Sensor 7 is a wireless notification sensor product which is embedded inside the wooden door or window.

This product is powered by battery and used for detecting the opening or closing of doors, windows. It can communicate with an associated Z-Wave product, such as Siren, Switch, etc.

This product supports Security 2 Command Class. While a Security S2 enabled Controller is needed in order to fully use the security feature.

This product can be operated in any Z-Wave network with other Z-Wave certified products from other manufacturers. All mains operated nodes within the network will act as repeaters regardless of vendor to increase reliability of the network.

This product supports SmartStart. SmartStart enabled products can be added into a Z-Wave network by scanning the Z-Wave QR Code present on the product with a controller providing SmartStart inclusion. No further action is required and the SmartStart product will be added automatically within 10 minutes after this product being powered on in the network vicinity.

This product supports the Over The Air (OTA) feature for the product's firmware upgrade.

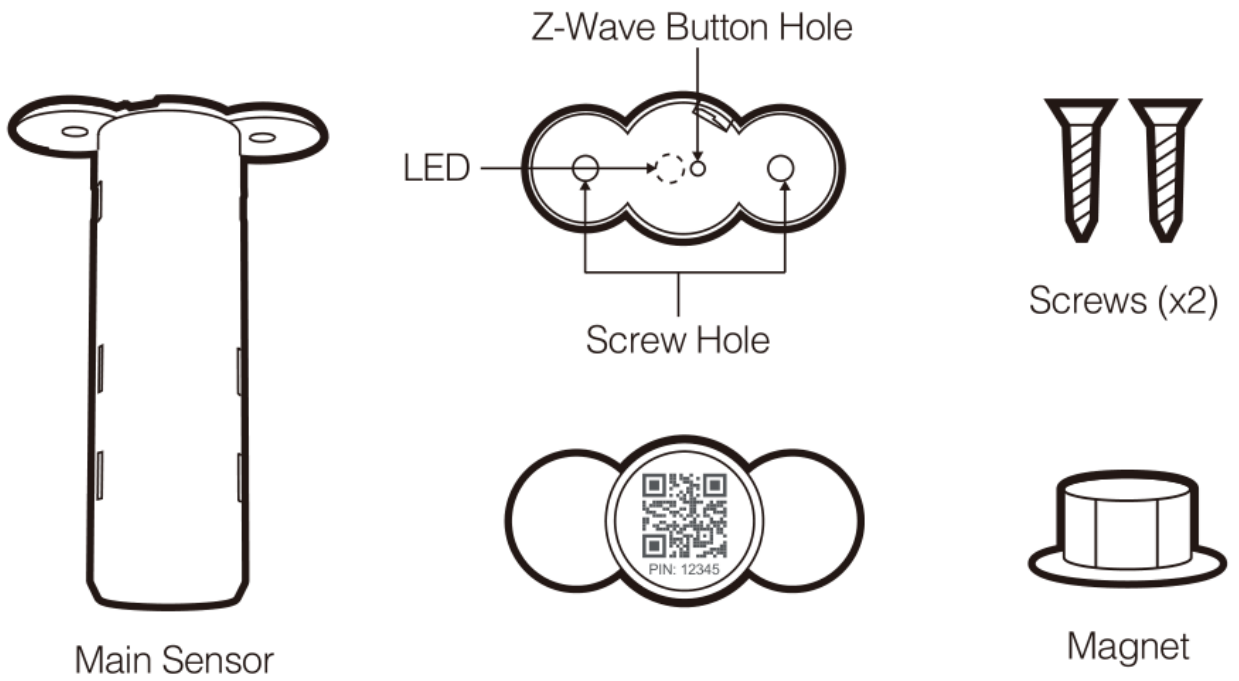

Terminology	Description
Action Button	Inside the Z-Wave Button Hole. Used for networking and resetting.
LED	Used for indicating the current state of the product.
Magnet	Change the sensor state via making the Magnet away or near from Main Sensor.

2 SPECIFICATIONS

2.1 Structural

Parameter	Value
Product Identifier	ZW187
Dimensions	Main Sensor: Φ19.2×64mm Magnet Sensor: Φ22×13mm
Weight	Main Sensor: 20g Magnet Sensor: 7g
Color	White
Shell Material	ABS
Shell Fire-proof Level	UL94 V-0
Waterproof and Dustproof	Rated IP20 under IEC 60529
Usage	For indoor use. Should be embedded inside the wooden door or window.
Operating Temperature	32~104°F (0~40°C)
Relative Humidity	8%~80%

2.2 Hardware

Parameter	Value
Z-Wave Module	ZGM130S037HGN1
Z-Wave Antenna Distance	40m (Indoor) /150m (Outdoor)
Indicator Light Color	Red
Buttons and Connectors	Action Button (x1), Magnet(x1)
Input Voltage	3.0V Lithium battery
Battery Included	Yes. 1pcs battery included.
Battery Required	Yes. 1pcs battery required.
Battery Info	Model: CR2 Capacity: 800mAh Detachable: Yes Chargeable: No Endurance: 2 years
Working Current	30mA
Standby Current	5uA
Built-in Sensors	Reed switch

2.3 Software

Parameter	Value
Wireless Technology	Z-Wave
Certification Type	Z-Wave Plus v2 Certification
Z-Wave SDK Version	7.12.2
Z-Wave Library Type	Enhanced 232 Slave
Z-Wave Role Type	ZWAVEPLUS_INFO_REPORT_ROLE_TYPE_SLAVE_SLEEPING_REPORTING [0x06]
Generic Product Type	GENERIC_TYPE_SENSOR_NOTIFICATION [0x07]
Specific Product Type	SPECIFIC_TYPE_NOTIFICATION_SENSOR [0x01]
Security Class	Non-Security, S0, S2 Unauthenticated, and S2 Authenticated
SmartStart Compatible	Support. After powering on, SmartStart is auto activated.
Over The Air (OTA)	Support. Firmware can be updated via RF.
Multi Channel Product	No
Association	Support. Refer to Section 4.7 Association Group Info.
Factory Reset	Support. Refer to Section 3.6 How to factory reset.

Power-down Memory	Support. All command settings will stay unchanged even power down.
Timed battery report	Support. Refer to Configuration Parameter 101.
Low battery warning	Support. Refer to Configuration Parameter 90.
Sensor State Report	Support. Send out notification via Group 1 when Magnet is away or near.
Control other product	Support. Control other Z-Wave product directly via Group 2 when Magnet is away or near.

3 QUICK START

3.1 Important safety information

Please read this Engineering Specification carefully for correct and effective use.

Failure to follow the recommendations set forth by AEOTEC Limited may be dangerous or cause a violation of the law. The manufacturer, importer, distributor, and/or reseller will not be held responsible for any loss or damage resulting from not following any instruction in this guide or in other materials.

This product is intended for indoor use in dry locations only. Do not use in damp, moist, and /or wet locations. Contains small parts; keep away from children.

3.2 Optimally placing the product

Recessed Door Sensor 7 has been designed to be installed within a door and its surrounding frame. To optimally install it, please note the following.

Recessed Door Sensor 7 must be installed so that its two parts separate when the door it is installed within is opened.

Typically, the larger part is installed in the door itself, while the smaller part is installed in the surrounding frame. This is not mandatory, however, and the installation can be reversed provided the drill hole instructions are suitably adapted.

As a magnetic sensor utilising wireless communication, Recessed Door Sensor 7 may not optimally work when mounted on a metal frame or close to metal objects such as door locks. Test accordingly before mounting Recessed Door Sensor 7 with adhesive tape or screws.

To be installed, Recessed Door Sensor 7 requires a minimum spacing of around 1mm between the door and its frame when closed. The gap should be no larger than 12mm.

When the door is closed and the sensor's two parts are installed, they should align.

Owing to both the magnet and the Z-Wave Plus antenna housed with Recessed Door Sensor 7, the two highlighted areas in this diagram are generally considered optimal.

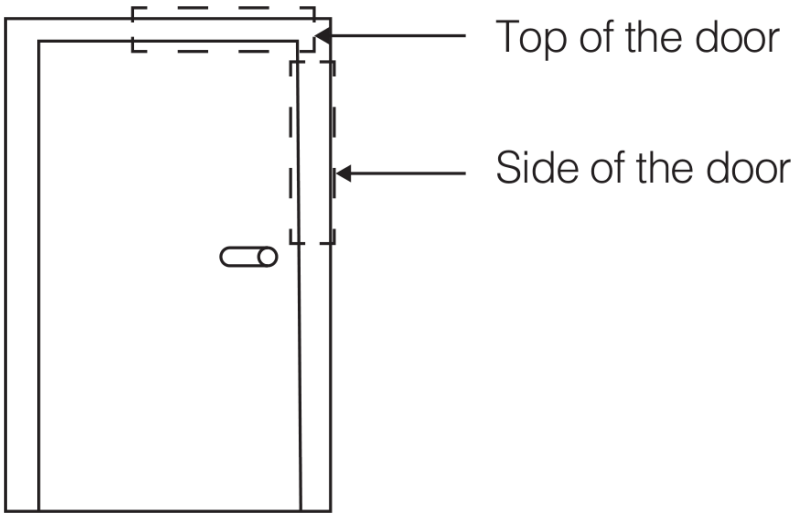

Diagram 1; optimal placement locations.

3.3 How to install the product

The following extra things are needed for the installation: screwdriver, 19mm wide drill bit, drill driver, PVA glue, rubber hammer.

1. Drill a hole 65mm deep in your door at the selected location with a 19mm wide drill bit.

2. Drill a hole 15mm deep in your doorframe at the corresponding location with a 19mm wide drill bit.

3. Insert sensor into the hole you drilled in the door. If it requires force to push the sensor, expand the drill hole accordingly. Secure the sensor with two of the provided screws.

4. Place a small amount of white PVA glue inside of the hole you drilled in the doorframe. Insert the magnet into the hole. If it requires force to insert, it can typically be tapped into place with a rubber hammer.

3.4 How to add the product

The following will step you through adding the product to your Z-Wave network.

Note:

When powered, the product will indicate Z-Wave status with color of LED frame:

- **Solid red color for a few seconds** - the product is already added to the Z-Wave network.
- **Slow fade-in fade-our red color for a few seconds** - the product is not added to any Z-Wave network.

1. Press the sensor latch with a slotting screwdriver to remove the lid of the sensor.

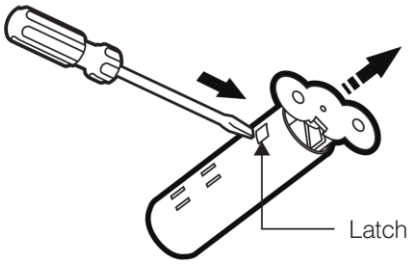

Diagram 2.

2. Squeeze the sides of the sensor casing to alleviate pressure on the chipboard; slide the chipboard out.

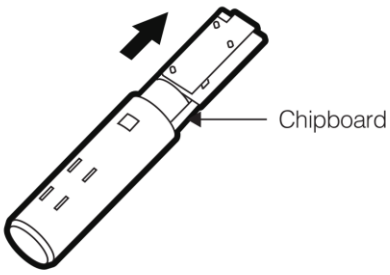

Diagram 3.

3. Remove the Pull Tab to engage the pre-installed battery. The sensor's LED will fade the color red in and out for a few seconds to indicate that it's powered on.

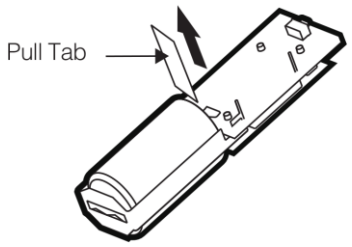

Diagram 4.

4. To add the product to your automation network manually:

(a) Set your main controller into its 'add product' mode. Refer to its manual if you are unsure of how to perform.

(b) Single-click the Action Button; its red LED will flash for a few seconds.

(c) If your controller supports S2 security, and you want to add the product into S2 Authenticated network, please scan the QR code or enter the PIN code (the underlined 5-digits of the DSK) when prompted. ***[IMPORTANT] QR/PIN can be found at the bottom of the product. A full DSK string can be found when you open the packaging on the Aeotec Logo Side. Please cut it out of the packaging and write some memo on its backside. Keep it in a safe place.***

(d) Wait for the adding process to end.

(e) Confirm the adding result. Successful adding can be confirmed by your controller's message or the LED status. If adding is successful, LED will become solid red color for 10 minutes and then off, or goes into sleep immediately if receiving the Wake Up No More Information from the controller. If its LED goes back to slow fade-in fade-out red color for 10 seconds, it indicates adding is unsuccessful. The product will auto-reset and then activate SmartStart. Repeat the above steps or contact us for further support if needed.

Note:

The classic manually inclusion will exit if the Action Button is clicked again during the adding process. Its LED will go back to slow fade-in fade-out red color for 10 seconds. The product will auto-reset and then activate SmartStart.

5. To add the product to your automation network with SmartStart:

(a) Scan the Z-Wave QR Code present on the product with a controller providing SmartStart inclusion. No further action is required and the product will be added automatically within 10 minutes after this product being powered on in the network vicinity.

(b) Its LED will change to a fast red blink after your controller beginning to response to its SmartStart inclusion request.

(c) Confirm the adding result. Successful adding can be confirmed by your controller's message or the LED status. If adding is successful, LED will become solid red color for 10 minutes and then off, or goes into sleep immediately if receiving the Wake Up No More Information from the controller. If its LED goes back to slow fade-in fade-out red color for 10 seconds, it indicates adding is unsuccessful. The product will auto-reset and then activate SmartStart. Repeat the above steps or contact us for further support if needed.

6. Squeeze the sides of the sensor casing lightly again and re-insert the chipboard as it was. Re-attach the lid.

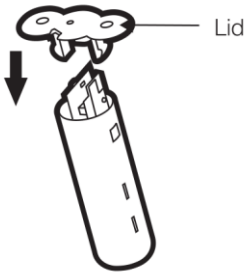

Diagram 5.

Recessed Door Sensor 7 is now a part of your Z-Wave home control system. You can configure it and its automations via your Z-Wave system; please refer to your software's user guide for precise instructions.

3.5 How to remove the product

1. Set your main controller into its 'remove product' mode. Refer to its manual if you are unsure of how to perform.

2. Make sure the product is powered.

3. Single-click the Action Button; its red LED will flash for a few seconds.

4. Confirm the removing result. Successful removing can be confirmed by your controller’s message or the LED status. If the removing is successful, LED will change to the default unpaired state which is slow fade-in fade-out red color. If its LED extinguish without slow fade-in fade-out red color, it indicates the removing is unsuccessful. Repeat the above steps or contact us for further support if needed.

3.6 How to manually trigger Wake Up

1. Make sure the product is powered.

2. Press and hold the Action Button for at least 2s and release when the LED becomes slow pulsing red color, then Wake Up Notification is issued.

3. Wake Up destination is according to the Wake Up Interval Set. It will stay awake for 10 minutes after issuing Wake Up Notification, that is called 10-Minutes Awake Mode, however it will go into sleep immediately if receives Wake Up No More Information by the Wake Up destination. If you want to exit the 10-Minutes Awake Mode manually, please single-click the Action Button, then it will go into sleep immediately and its LED will extinguish.

Note:

There is another way to manually trigger Wake Up, that is repower on, but it’s not recommended for inconvenience. The Wake Up destination is according to the Wake Up Interval Set. The Wake Up period starts when the node issues a Wake Up Notification and it ends either 10 seconds after the last received/transmitted frame or at the reception of a Wake Up No More Information Command by the Wake Up destination.

3.7 How to test the communication quality

1. Make sure the product is powered.

2. Press and hold the Action Button for at least 5s, and release when LED becomes fast pulsing red color, then testing the signal strength to the main controller is performed.

3. Wait for the testing process to end.

4. Confirm the testing result. After the testing is complete:

(a) If the communication quality is good: its LED will change to be solid red color for 3 seconds and then off.

(b) If the communication quality is weak: its LED will change to slowly blink red color for 3 seconds and then off.

Note:

If you want to exit testing the communication quality function, please single-click the Action Button, then it will go into sleep immediately and its LED will extinguish.

3.8 How to factory reset

If the primary controller is missing or inoperable, you may need to reset the product to factory settings.

1. Make sure the product is powered.

2. Press and hold the Action Button for at least 20s, and release when LED becomes solid red color, then Factory Reset is performed.

3. Wait for the LED indicator to be slow fade-in fade-out red LED color, which indicates the reset operation is successful. Otherwise, please try again. Contact us for further support if needed.

Note:

1. This procedure should only be used when the primary controller is missing or inoperable.

2. Factory Reset will:

(a) Remove the product from Z-Wave network;

(b) Delete the Association setting;

(c) Restore the configuration settings to the default.

4 SOFTWARE FUNCTION DEFINITION

4.1 Supported Command Classes

In order to increase interoperability with legacy controlling nodes, this product can reply to Manufacturer Specific Get Commands received non-securely if it was granted the S0 network key as its highest Security Class.

Command Class	Version	Required Security Class
ZWAVEPLUS_INFO	2	None
ASSOCIATION	2	Highest granted Security Class
MULTI_CHANNEL_ASSOCIATION	3	Highest granted Security Class
ASSOCIATION_GRP_INFO	3	Highest granted Security Class
TRANSPORT_SERVICE	2	None
VERSION	3	Highest granted Security Class
MANUFACTURER_SPECIFIC	2	Highest granted Security Class
PRODUCT_RESET_LOCALLY	1	Highest granted Security Class
INDICATOR	3	Highest granted Security Class
POWERLEVEL	1	Highest granted Security Class
BATTERY	1	Highest granted Security Class
SENSOR_BINARY	2	Highest granted Security Class
CONFIGURATION	4	Highest granted Security Class
SECURITY	1	None
SECURITY_2	1	None
NOTIFICATION	8	Highest granted Security Class
WAKE_UP	2	Highest granted Security Class
SUPERVISION	1	None
FIRMWARE_UPDATE_MD	5	Highest granted Security Class
APPLICATION_STATUS	1	None

4.2 Basic Command Class mapping

Basic Command Class is not mapped to any of the supported command classes.

4.3 Z-Wave Plus Info

Parameter	Value
Z-Wave Plus Version	0x02
Role Type	0x06 [ZWAVEPLUS_INFO_REPORT_ROLE_TYPE_SLAVE_SLEEPING_REPORTING]
Node Type	0x00 [ZWAVEPLUS_INFO_REPORT_NODE_TYPE_ZWAVEPLUS_NODE)
Installer Icon Type	0x0C06 [ICON_TYPE_SPECIFIC_SENSOR_NOTIFICATION_ACCESS_CONTROL]
User Icon Type	0x0C06 [ICON_TYPE_SPECIFIC_SENSOR_NOTIFICATION_ACCESS_CONTROL]

4.4 Manufacturer Specific

Parameter	Value
Manufacturer ID 1	0x03
Manufacturer ID 2	0x71
Product Type ID 1	0x00 [EU], 0x01 [US], 0x02 [AU]
Product Type ID 2	0x02 [PRODUCT_TYPE_ID_SENSOR]
Product ID 1	0x00
Product ID 2	0xBB

4.5 Version

Parameter	Value
Z-Wave Protocol Library Type	0x03
Z-Wave Protocol Version	0x07
Z-Wave Protocol Sub Version	0x0C
Firmware 0 Version	0x01 [Z-Wave Chip Firmware Version]
Firmware 0 Sub Version	0x03 [Z-Wave Chip Firmware Sub Version]
Hardware Version	0xBB
Number of firmware targets	0x00

4.6 Association Group Info

Root product

ID	Name	Node count	Profile	Function
1	Lifeline	5	General: Lifeline	**Product Reset Locally Notification:** Issued when Factory Reset is performed. **Battery Report:** Issued periodically to report the current battery level; Issued when battery becomes low. **Sensor Binary Report:** Issued when Magnet is away or near. **Notification Report [Type=0x06; Event=0x16]:** Issued when sensor state is changed to be Open Status. **Notification Report [Type=0x06; Event=0x17]:** Issued when sensor state is changed to be Close Status. **Notification Report [Type=0x08; Event=0x01]:** Issued when battery voltage change exceeds 20%. **Notification Report [Type=0x09; Event=0x04;Param=0x55]:** Issued when reset due to Watch-Dog Timeout.
2	On/Off control (Access)	5	Notification: Access Control	**Basic Set:** Issued when Magnet is away or near.(The Basic Set Value is determined by Configuration Parameter 3)

4.7 Notification

Notification Type		Notification Events		Description
Access Control	0x06	Window/Door is open	0x16	Open Status.
		Window/Door is closed	0x17	Close Status.
Power Management	0x08	Power has been applied	0x01	Battery voltage change exceeds 20%.
System	0x09	System software failure (manufacturer proprietary failure code provided)	0x04	Event/State Parameter=0x55: Reset due to Watch-Dog Timeout.

4.8 Binary Sensor

Sensor Type		Sensor Value	Description
Door/Window	0x0A	0xFF	Open Status.
		0x00	Close Status.

4.9 Wake Up

Parameter	Value	Time
Min Wake Up Interval Seconds	0x0000F0	240s [4 minutes]
Max Wake Up Interval Seconds	0xFFFFF0	16777200s

Default Wake Up Interval Seconds	0x000E10	3600s [1 hour]
Wake Up Interval Step Seconds	0x0000F0	240s [4 minutes]

4.10 Battery

1. If send Battery Get to the product, it will issue Battery Report with current battery level to the requester when waked up.

2. If re-power on, it will issue Battery Report with current battery level via Lifeline.

3. If waked up, it will detect battery level, and issue Battery Report (Value=0xFF) via Lifeline when battery level is less than or equal to threshold.

4. The 2.85V or more battery voltage corresponds to 100% battery level, and 2.6V or less corresponds to 0%.

4.11 Indicator

Indicator ID		Property ID	
Node Identify	0x50	On Off Period	0x03
		On Off Cycles	0x04
		On time within an On/Off period	0x05

4.12 Configuration

Note: No Bulk Support equals to True. ***<u>It will return an Application Rejected Request Command when receiving Configuration Bulk Set or Get (if received without Supervision encapsulation)</u>.*** It will reset all its configuration parameters if either manually reset to factory default or receives a Configuration Default Reset Command. It will NOT modify or reset any configuration parameter when being included or excluded of a Z-Wave network.

Parameter	0x01 (1)			
Name	Binary Sensor Report			
Info	Enable/Disable Binary Sensor Report			
Properties	Size	1	Min Value	0
	Format	Unsigned Integer	Max Value	1
	Read-only	False	Default Value	0
	Altering capabilities	False	Advanced	False
Description	Allow for backward compatibility to report Binary if Notification Report cannot be used for status changes.			
	Value	Function		
	0	Disable. Sensor Binary Report will NOT be issued via Lifeline when Magnet is away or near.		
	1	Enable. Sensor Binary Report will be issued via Lifeline when Magnet is away or near.		

Parameter	0x02 (2)			
Name	Sensor Reports			
Info	Reverse Sensor Reports			
Properties	Size	1	Min Value	0
	Format	Unsigned Integer	Max Value	1
	Read-only	False	Default Value	0
	Altering capabilities	False	Advanced	False
Description	Reverse both Sensor Binary Report and Notification Report.			
	Value	Function		
	0	Open Status when Magnet is away, Close Status when magnet is near.		
	1	Close Status when Magnet is away, Open Status when magnet is near.		

Parameter	0x03 (3)			
Name	Association Group 2 Settings			
Info	Configure the Basic Set value			
Properties	Size	1	Min Value	0
	Format	Unsigned Integer	Max Value	6
	Read-only	False	Default Value	1
	Altering capabilities	False	Advanced	False
Description	Determine the Basic Set value to control other Z-Wave products directly when Magnet is away or near.			
	Value	Function		
	0	Disable completely.		
	1	Send Basic Set 0xFF when Magnet is away, and send Basic Set 0x00 when Magnet is near.		
	2	Send Basic Set 0x00 when Magnet is away, and send Basic Set 0xFF when Magnet is near.		
	3	Only send Basic Set 0xFF when Magnet is away.		
	4	Only send Basic Set 0x00 when Magnet is near.		
	5	Only send Basic Set 0x00 when Magnet is away.		
	6	Only send Basic Set 0xFF when Magnet is near.		

Parameter	0x04 (4)			
Name	Application Layer Retry			
Info	Configure retry number and wait time			
Properties	Size	2	Min Value	0
	Format	Unsigned Integer	Max Value	0x05FF
	Read-only	False	Default Value	0
	Altering capabilities	False	Advanced	True
Description	The product supports an application retry mechanism when the application of the product has detected a transmission error when ***Basic Set, Sensor Binary Report or Notification Report (Access Control)*** message is sent out but fails to result in an ACK or a Supervision Report.			
	Value	Function		
	Byte 1	Configure the number of retries. The valid value is 0-5. 0 means disable retry.		
	Byte 2	Configure the wait time between retries. The valid value is 0-255. Unit is 100ms.		

Parameter	0x05 (5)			
Name	Supervision Report Wait Time			
Info	Configure Supervision Report Wait Time			
Properties	Size	1	Min Value	1
	Format	Unsigned Integer	Max Value	50 [0x32]
	Read-only	False	Default Value	15 [0x0F]
	Altering capabilities	False	Advanced	True
Description	Configure Supervision Report Wait Time			
	Value	Function		
	1-50	Configure Supervision Report Wait Time. Unit is 100ms. Note: Issuing Basic Set, Sensor Binary Report or Notification Report(Access Control) via association groups uses Supervision encapsulation only if sending commands with S2(or higher security) encapsulation. In other word, this parameter can be configured in any network, but works only in S2 (or higher security) network.		

Parameter	0x51 (81)
Name	LED Indicator

Info	Control LED Indicator			
Properties	Size	1	Min Value	0
	Format	Unsigned Integer	Max Value	3
	Read-only	False	Default Value	3
	Altering capabilities	False	Advanced	False
Description	Determine whether the LED flash or not when sending Basic Set, Sensor Binary Report, Notification Report (Access Control) or Wake Up Notification.			
	Value	Function		
	0	Completely disable LED.		
	1	LED quickly flashes only when sending Basic Set, Sensor Binary Report or Notification Report (Access Control).		
	2	LED activates only when sending Wake Up Notification.		
	3	LED quickly flashes when sending Basic Set, Sensor Binary Report or Notification Report (Access Control), and activates when sending Wake Up Notification.		

Parameter	0x5A (90)			
Name	Low battery threshold			
Info	Configure the low battery threshold			
Properties	Size	1	Min Value	10 [0x0A]
	Format	Unsigned Integer	Max Value	50 [0x32]
	Read-only	False	Default Value	30 [0x1E]
	Altering capabilities	False	Advanced	False
Description	Induce battery report when battery level is less than or equal to threshold. Forward low battery report.			
	Value	Function		
	10-50	10%-50%.		

Parameter	0x65 (101)			
Name	Timed battery report			
Info	Set how often battery is reported			
Properties	Size	2	Min Value	1
	Format	Unsigned Integer	Max Value	14400 [0x3840]
	Read-only	False	Default Value	70 [0x0046]
	Altering capabilities	False	Advanced	False
Description	Set how often battery is reported in minutes.			
	Value	Function		
	1-14400	Set how often battery is reported in minutes.		