LEEDARSON

We build your success in IoT.

LEEDARSON Motion sensor Pet Immunity Z-Wave™

7CA-SS-VE-C0

Motion Sensor Pet

immunity

Quick Start Guide

1. Product Introduction

The Motion Sensor lets you know when movement is detected in a certain area and can trigger different actions in response to that movement (or lack of movement). It supports the pet immunity up to 80 lbs. This sensor integrated Z-Wave communication module to connect with Z-Wave gateway, and this device can be adapted to EU(868.42Mhz) or US(908.42MHz).

If you want your Motion Sensor to be a security device that use secure/encrypted message to communicate in a Z-Wave network, then a security enabled Z-Wave controller is needed.

The motion sensor can be included and operated in any Z-Wave network with other Z-Wave certified devices from other manufacturers and/or other applications. All non-battery operated nodes within the network will act as repeaters regardless of vendor to increase reliability of the network.

2. Product Appearance

Product appearance and function overview.

LED

Reset button

Bracket

Button:

- Short press reset button into learning mode, then the sensor can inclusion or exclusion from the Z-Wave network.
- Hold the key for 5s to reset the sensor, after reset, Sensor will send "Device_Reset_Locally" to the main controller and exclude from the Z-Wave network when the Button is released, this procedure will reset the Sensor to factory default.
- Short press button for 3 times then the sensor sending wake up notificati on to gateway, and LED will fast blink when sending data, send over then the L ED turn off..

Specification	
Detection angle	80 degrees
Detection distance	8 meters / 26.25 feet

Pet immune	80 lbs (36 kgs)
Mounting height	6.23 ft. to 7.55 ft.
	(1.9m to 2.3m)
Light sensor	20 lux for day/night(bright/dark)
Protocol	Z-Wave
Frequency	908.42MHz (US)
	868.42MHz(EU)
Power source	Battery-powered
Battery type	CR123A X 1
Battery life	3 years
Anti-Tamper	YES
Low power alarm	YES
Certifications	CE/FCC/Z-Wave

3. Features/Capabilities:

- Supports pet immunity up to 80 lbs (36 kgs)
- Use PIR & Fresnel lens technology
- Easy installation with bracket
- Low battery alarm
- Equipped with an anti-tamper switch that reports any tampering

4. Installation Position and Notes

1. Installation position should be chosen at the area which the bass-by will be across, try to make the bass-by in the detection area as below.

Side view

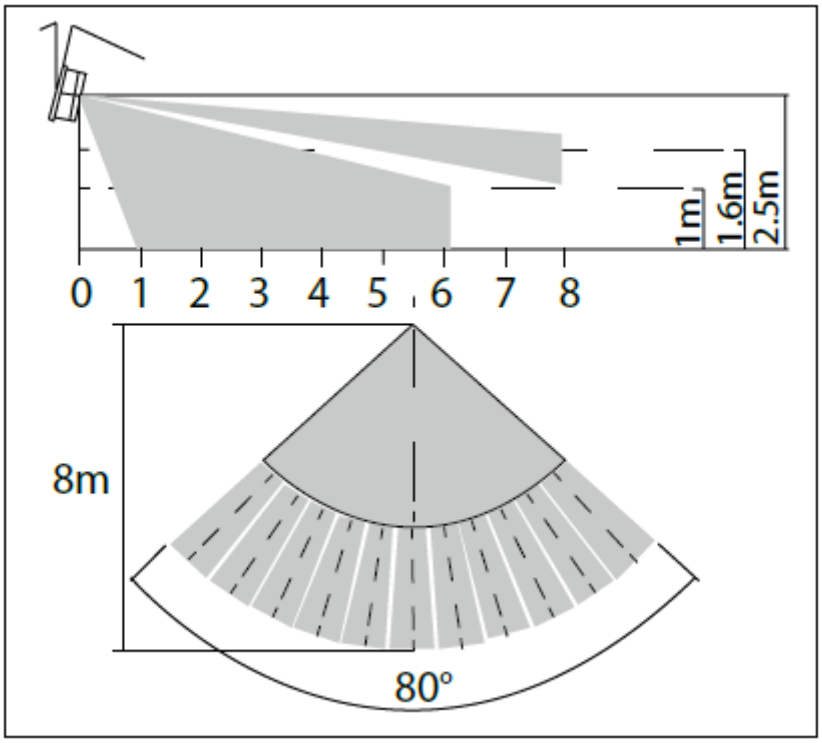

Top view

2. Do avoid installation near air-conditioner, electric fans, refrigerators, ovens or other places where temperature easy change.
3. In order not to affect the detecting result, there should be no object in front of the produces lens.
4. Building (such as the wall) will shorten the distance of wireless communication.
5. This device can be mounted on the wall only, it cannot be installed on the ceiling.

5. Product Installation

Adding the device as accessories, install it according to the diagram below:

① Choose the installation location on the wall, fix the bracket by screw or 3M adhesion tape on the wall.

② Take off the bracket in the back, and draw out the battery insulation sheet, then assembly the bracket.

③ Assembly the main body to the bracket.

6. Product Usage

Function of Action Button:

6.1 All functions of each trigger:

Function Of Action

Trigger	Description
Power on	**In the network:** Send Battery report and Wake up notification, the LED turn on within 1 second.
	Not in the network: Only the LED will be slow blink 3 times.
SmartStart Inclusion	**Add the Motion Sensor into the Z-Wave network via SmartStart:** **1.** Add your Motion Sensor device to the primary controller's SmartStart provisioning list (if you don't know how to do this, refer to its manual) by scanning your device's QR code **2.** Power on the motion sensor again. **3.** The motion will send "Z-Wave protocol Command Class" frame to start SmartStart Inclusion. **4.** Led will fast blink and solid for 2 seconds to indicate the inclusion is successful, if inclusion failed, Led will off.
Short press button three time	**Add the Motion Sensor into the Z-Wave network:** **5.** Power on your Motion Sensor, and let your Z-Wave controller into add/inclusion mode. **6.** 3 consecutive clicks in 1.5 seconds, the Motion Sensor will send out a node info security CC in command class list (Security inclusion), the LED will be fast blink for 30 seconds. **7.** If the inclusion is successful, the LED will be turn on within 2 seconds. If failed, LED will be turn off forever, and please repeat the steps in above. **Remove Motion Sensor from a Z-Wave network:** **1.** Power on your Motion Sensor, and let the Z-Wave primarycontroller into remove mode. **2.** 3 consecutive clicks in 1.5 second, the LED will be fast blink for 30 seconds. **3.** If Motion Sensor has been successfully removed from your Z-Wave network, the LED will be turn on 2 seconds. If failed, LED will be turn off forever, and please repeat the steps in above.

Short press button one time	**In the network:** Send Wake up notification, and LED will fast blink when sending data, send over then the LED turn off.
	Not In the network: NOP.
Press and hold more than 5 seconds	**Reset Motion Sensor to factory default.** 1. Triggering this action, in 5 seconds LED will be accelerate blink. After 5 seconds, the LED will remain on until the key is released. Motion Sensor will send “Device_Reset_Locally” to the main controller and exclude from the Z-Wave network when the button is released, this procedure will reset the sensor to factory default. 2. Please use this procedure only when the network primary controller is missing or otherwise inoperable. 3. When not in the network, triggering this action, in 5 seconds LED will be accelerate blink red. After 5 seconds, the LED will remain on red until the key is released. this procedure will reset the sensor to factory default.
Motion is triggered	**In the network:** Send Notification report and Sensor multilevel report and Basic set (Setup configuration parameter 0x0E to 0x01), and the LED will be turn on 0.2 second.
	Not in the network: Motion sensor is disable.
Tamper switch is triggered	**In the network:** Send Notification report, and the LED will be turn on 0.2 second.
	Not in the network: Tamper switch is disable.

6.2 Caution:

This device complies with Part 15 of the FCC rules. Operation is subject to the following two conditions: (1) this device may not cause harmful interference, and (2) this device must accept any interference received, including interference that may cause undesired operation.

Changes or modifications not expressly approved by the party responsible for compliance could void the user's authority to operate the equipment.

Hereby, Corporation declares that this device is in compliance with the essential requirements and other relevant provisions of Directive 2014/53/EU

6.3 Low voltage alarm to remind changing battery.

This product has low voltage detection reminder, when the battery voltage is in low status, the detector will give out low battery signal to controller.

7. Attention

1. If need to clean the sensor, please use a soft cloth with a little alcohol to wipe it after you cut off the power.
2. This product is just for indoor use.
3. Replace the battery timely on low battery warning to ensure the detector works properly. Please remove the battery and safe keeping, if you don't use this product for a long time.
4. This device can be mounted on the wall only, it cannot be installed on the ceiling.
5. The reference range template of PIR detection is tested at the indoor temperature (the range is 20℃～25℃)，the target of the test is 77kg±10kg weight and 1.71m±0.3m height, the target of the test across movement speed is 4m/s±0.15m/s.
6. In order to prevent the PIR sensor's abnormal fault, please don't mounting and operating sensor in the bellow conditions,

   Firstly, product mounting should prevent installed in the air flow environment such as in front of the door, window, heater, air conditioner and so on.

   Secondly, the PIR detection area should not be shielded by other screen.

   Thirdly, if the operating temperature range is out of the defined range of product specification may result in some product faults, which is not in the technique commitment of manufacturer.

   Fourthly, this product has mot pet immunity function, so when some animals go through in front of the product may trigger PIR function reported.

RISK OF EXPLOSION IF BATTERY IS REPLACED BY AN INCORRECT TYPE. DISPOSE OF USED BATTERIES ACCORDING TO THE INSTRUCTIONS

Dispose of the device separately from household waste at an official collection point. Professional recycling protects people and the environment against potential negative effects.

Command Class List

	Non-Included Non-Secure	Included S0 Non-Secure
Node Info Frame	COMMAND_CLASS_ZWAVEPLUS_INFO COMMAND_CLASS_ASSOCIATION COMMAND_CLASS_ASSOCIATION_GRP_INFO COMMAND_CLASS_TRANSPORT_SERVICE_V2 COMMAND_CLASS_VERSION COMMAND_CLASS_MANUFACTURER_SPECIFIC COMMAND_CLASS_DEVICE_RESET_LOCALLY COMMAND_CLASS_POWERLEVEL COMMAND_CLASS_BATTERY COMMAND_CLASS_SECURITY COMMAND_CLASS_SECURITY_2 COMMAND_CLASS_NOTIFICATION_V3 COMMAND_CLASS_SENSOR_MULTILEVEL_V5 COMMAND_CLASS_WAKE_UP COMMAND_CLASS_SUPERVISION COMMAND_CLASS_CONFIGURATION_V4 COMMAND_CLASS_FIRMWARE_UPDATE_MD_V5	COMMAND_CLASS_ZWAVEPLUS_INFO COMMAND_CLASS_TRANSPORT_SERVICE_V2 COMMAND_CLASS_SECURITY COMMAND_CLASS_SECURITY_2 COMMAND_CLASS_SUPERVISION
Security Command Supported Report Frame		COMMAND_CLASS_VERSION COMMAND_CLASS_POWERLEVEL COMMAND_CLASS_ASSOCIATION COMMAND_CLASS_ASSOCIATION_GRP_INFO COMMAND_CLASS_MANUFACTURER_SPECIFIC COMMAND_CLASS_DEVICE_RESET_LOCALLY COMMAND_CLASS_BATTERY COMMAND_CLASS_NOTIFICATION_V3 COMMAND_CLASS_WAKE_UP COMMAND_CLASS_CONFIGURATION_V4 COMMAND_CLASS_SENSOR_MULTILEVEL_V5 COMMAND_CLASS_FIRMWARE_UPDATE_MD_V5
	Included S2 Non-Secure	
Node Info Frame	COMMAND_CLASS_ZWAVEPLUS_INFO COMMAND_CLASS_TRANSPORT_SERVICE COMMAND_CLASS_SECURITY COMMAND_CLASS_SECURITY_2 COMMAND_CLASS_SUPERVISION	
Security Command Supported Report Frame	COMMAND_CLASS_VERSION COMMAND_CLASS_POWERLEVEL COMMAND_CLASS_ASSOCIATION COMMAND_CLASS_ASSOCIATION_GRP_INFO COMMAND_CLASS_MANUFACTURER_SPECIFIC COMMAND_CLASS_DEVICE_RESET_LOCALLY COMMAND_CLASS_BATTERY COMMAND_CLASS_NOTIFICATION_V3 COMMAND_CLASS_WAKE_UP COMMAND_CLASS_CONFIGURATION_V4 COMMAND_CLASS_SENSOR_MULTILEVEL_V5 COMMAND_CLASS_FIRMWARE_UPDATE_MD_V5	

Association Command Class

Motion Sensor supports 2 association groups and max 5 nodes for each group.

Association Group Info Command Class

Association Group Info

Grouping identifier	Group Name	Profile MS	Profile LS
01	Lifeline	0x00	0x01
02	On/Off control	0x71	0x07

Association Group Command List

Group 1	Command List Support
Command Class	COMMAND_CLASS_NOTIFICATION_V8(0x71)
Command	NOTIFICATION_REPORT_V8(0x05)
Command Class	COMMAND_CLASS_BATTERY(0x80)
Command	BATTERY_REPORT(0x03)
Command Class	COMMAND_CLASS_DEVICE_RESET_LOCALLY(0x5A)
Command	DEVICE_RESET_LOCALLY_NOTIFICATION(0x01)
Command Class	COMMAND_CLASS_SENSOR_MULTILEVEL_V5(0x31)
Command	SENSOR_MULTILEVEL_REPORT(0x05)
Group 2	Command List Support
Command Class	COMMAND_CLASS_BASIC(0x20)
Command	BASIC_SET(0x01)

Notification Commands

Notification Type	Notification Event
HOME_SECURITY (0x07)	(0x00) NO_EVENT

	(0x03) TAMPERING_COVERING_REMOVED
	(0x08) MOTION_DETECTION_UNKNOWN_LOCATION
POWER_MANAGEMENT (0x08)	(0x0A) REPLACE_BATTERY_SOON
	(0x0B) REPLACE_BATTERY_NOW
	(0x00) NO_EVENT
LIGHET_ALARM(0x14)	(0x00) NO_EVENT
	(0x01) LIGHETSENSOR_ALARM_DETECTED

Configuration Set Command Class

Command Format

7	6	5	4	3	2	1	0
Command Class = COMMAND_CLASS_CONFIGURATION							
Command = CONFIGURATION_SET							
Parameter Number							
Default	Reserved				Size		
Configuration Value 1(MSB)							
Configuration Value 2							

……
Configuration Value n(LSB)

5.4.1 Parameter Number Definitions (8 bit)

Name	Info	Parameter Number	Default Value	Max Value	Min Value	Size	Read-only	Format	Altering capabilities
LowBatPrecent	LowBatAlarm	0x0A (10)	10 (0x0A)	50 (0x32)	5 (0x05)	1	NOT Read-only	UNSIGNED_INTEGER	Will alters capabilities
Pironoff	PironoffSet	0x0C (12)	1 (0X01)	1 (0X01)	0 (0X00)	1	NOT Read-only	UNSIGNED_INTEGER	Will alters capabilities
PirTimeout	PirTimeoutSet	0x0D (13)	60 (0X3C)	15300 (0x3BC 4)	05 (0x05)	2	NOT Read-only	UNSIGNED_INTEGER	Will alters capabilities
BasicEnable	SendBasic	0x0E (14)	0 (0X00)	1 (0X01)	0 (0X00)	1	NOT Read-only	UNSIGNED_INTEGER	Will alters capabilities
BasicReverse	BasicValue	0x0F (15)	0 (0X00)	1 (0X01)	0 (0X00)	1	NOT Read-only	UNSIGNED_INTEGER	Will alters capabilities
PirSensitivity	PirSensitivitySet	0x10 (16)	9 (0X09)	10 (0X0A)	0 (0X00)	1	NOT Read-only	UNSIGNED_INTEGER	Will alters capabilities
PirPetImmunity	PirPetImmunitySet	0x11 (17)	0 (0X00)	1 (0X01)	0 (0X00)	1	NOT Read-only	UNSIGNED_INTEGER	Will alters capabilities
LightSensorSendType	LightSensorSendSet	0x12 (18)	1 (0X01)	3 (0X03)	1 (0X01)	1	NOT Read-only	UNSIGNED_INTEGER	Will alters capabilities

5.4.2 Parameter Number description

Parameter Number	Description
0x0A (10)	Low battery power level of alarm threshold values: the value range are 5~50 for percentage, the battery low power level can setting 5%~50%.

0x0C(12)	Enable/Disable the PIR 0 = Disable the PIR. 1 = Enable the PIR.
0x0D (13)	Setup the wait time of PIR for clear the motion. Valid values: 0x05~0x3BC4
0x0E (14)	When the Motion Sensor is triggered, if this parameter is 0x01 then it will send Basic set command to group 1. 0 = Don't send. 1 = Send.
0x0F (15)	PIR triggers the correspondence between the value of the Basic set and the PIR state. -If this value is 0x00 : PIR triggers send the basic set with 0xFF, PIR alarm release send the basic set with 0x00. -If this value is 0x01 : PIR triggers send the basic set with 0x00, PIR alarm release send the basic set with 0xFF. Only support 0x00 and 0x01 values as valid value.
0x10 (16)	Motion detection sensitivity level is a value between 1 and 10. This value affects the amount of motion energy required to generate a motion event and also affects the detection range and angle. 1 = Lowest Motion Sensitivity 10 = Highest Motion Sensitivity
0x11 (17)	Enable/disable pet immunity mode. This feature is lens dependent and detection range may be reduced when Pet Immunity is enabled. 0 = Disable the pet immunity mode 1 = Enable the pet immunity mode
0x12 (18)	Configure lightsensor to upload data form 1=Upload lumens value. 2=Upload day or night(By notification). 3=Upload lumens and day/night .

5.5 Sensor_Multilevel

Command	value
Sensor multilevel supported	Air temperature (bit 0), Luminance (bit 2).