Yale real Living

Yale® Assure Lock®
Interconnected Key Free Touchscreen
Installation and Programming Instructions
(YRC256)

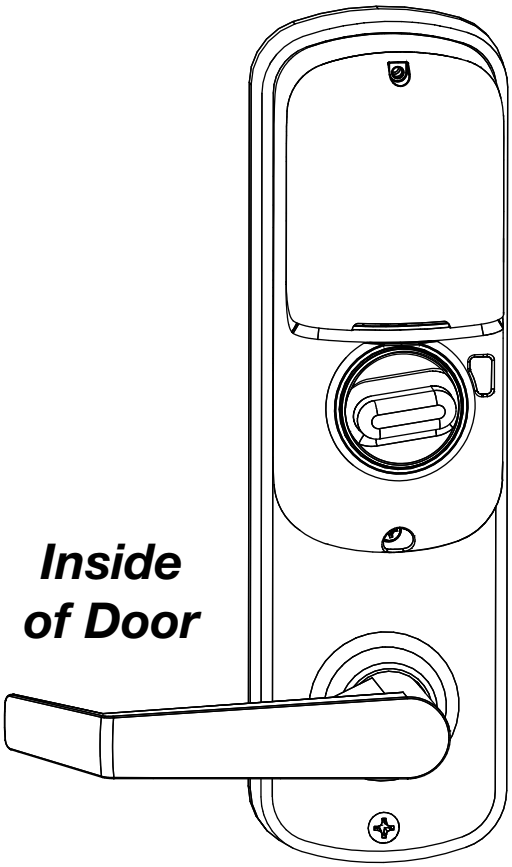

Inside of Door

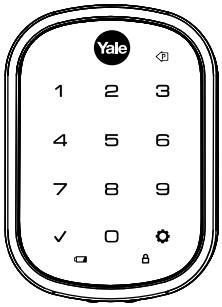

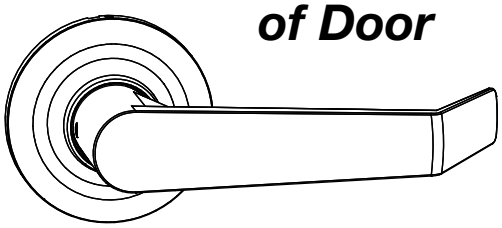

Outside of Door

4" Shown - 5.5" Available

Before you begin

DOWNLOAD THE BILT APP

for step-by-step installation instructions & to register your product

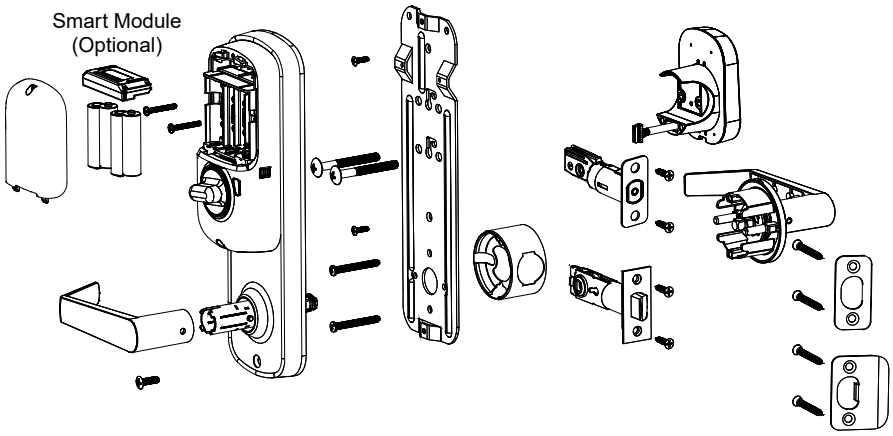

Retrofitting or modifying this product may impact fire rating, safety features and warranty.
Consult with code specifications to ensure compliance with all codes and ratings.

Before You Begin

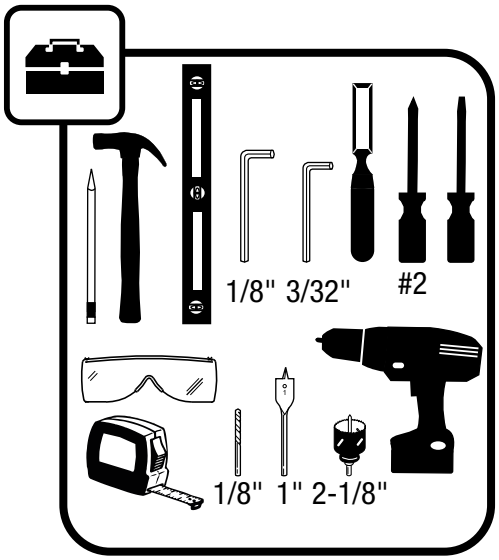

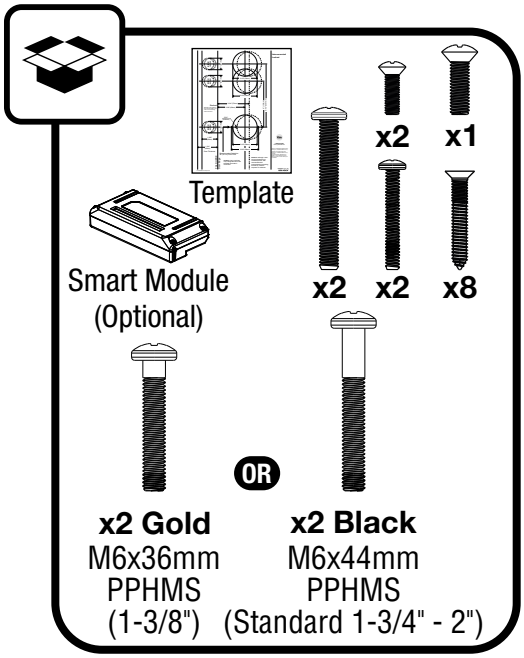

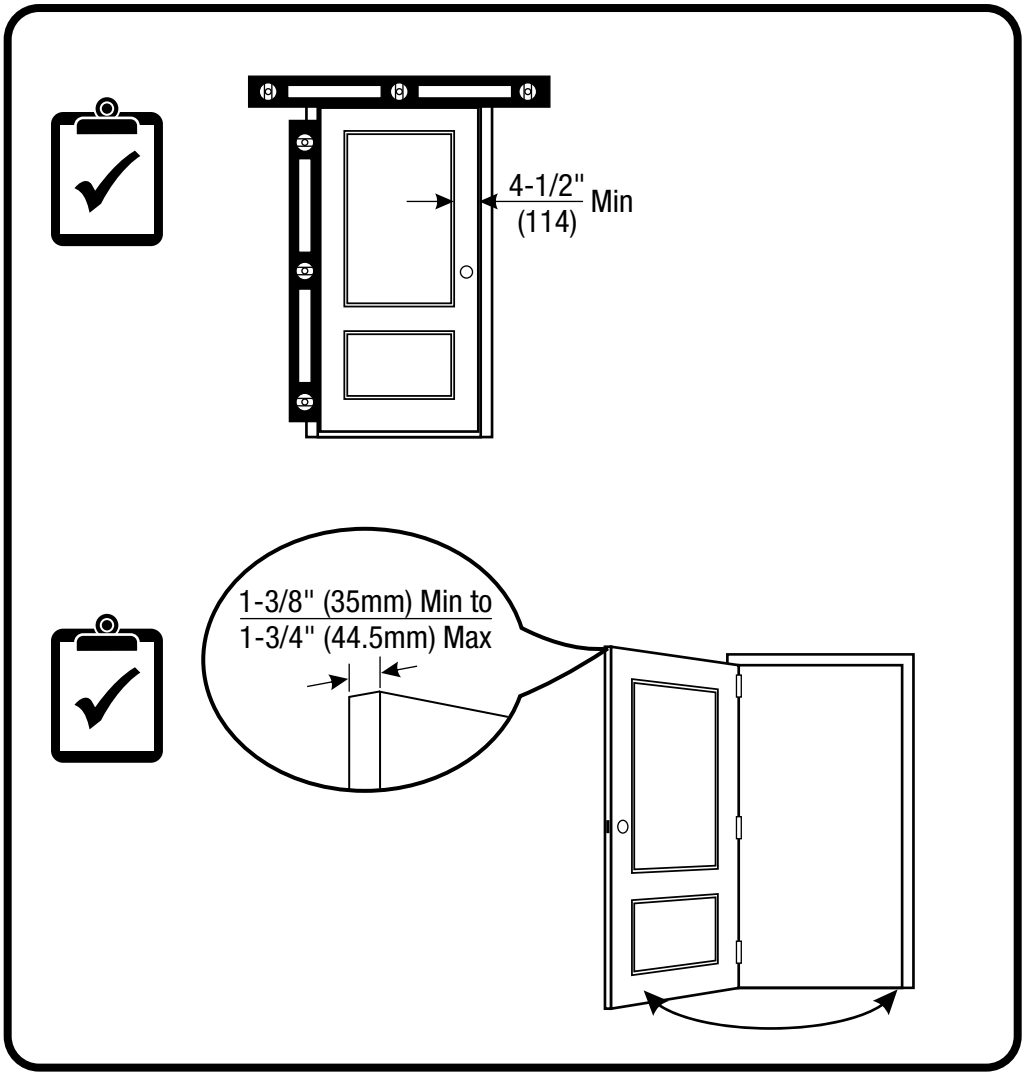

Mark Door Reference Lines

EXISTING

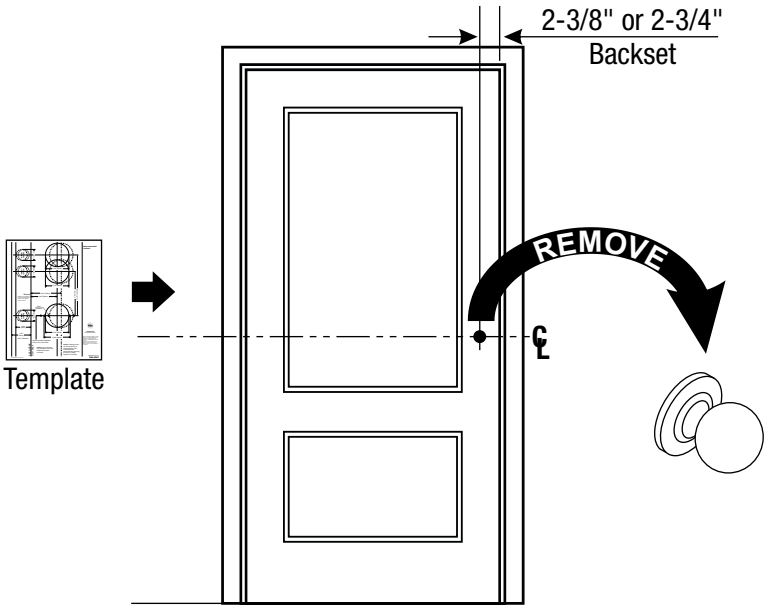

1 Preparing Door *(if necessary)*

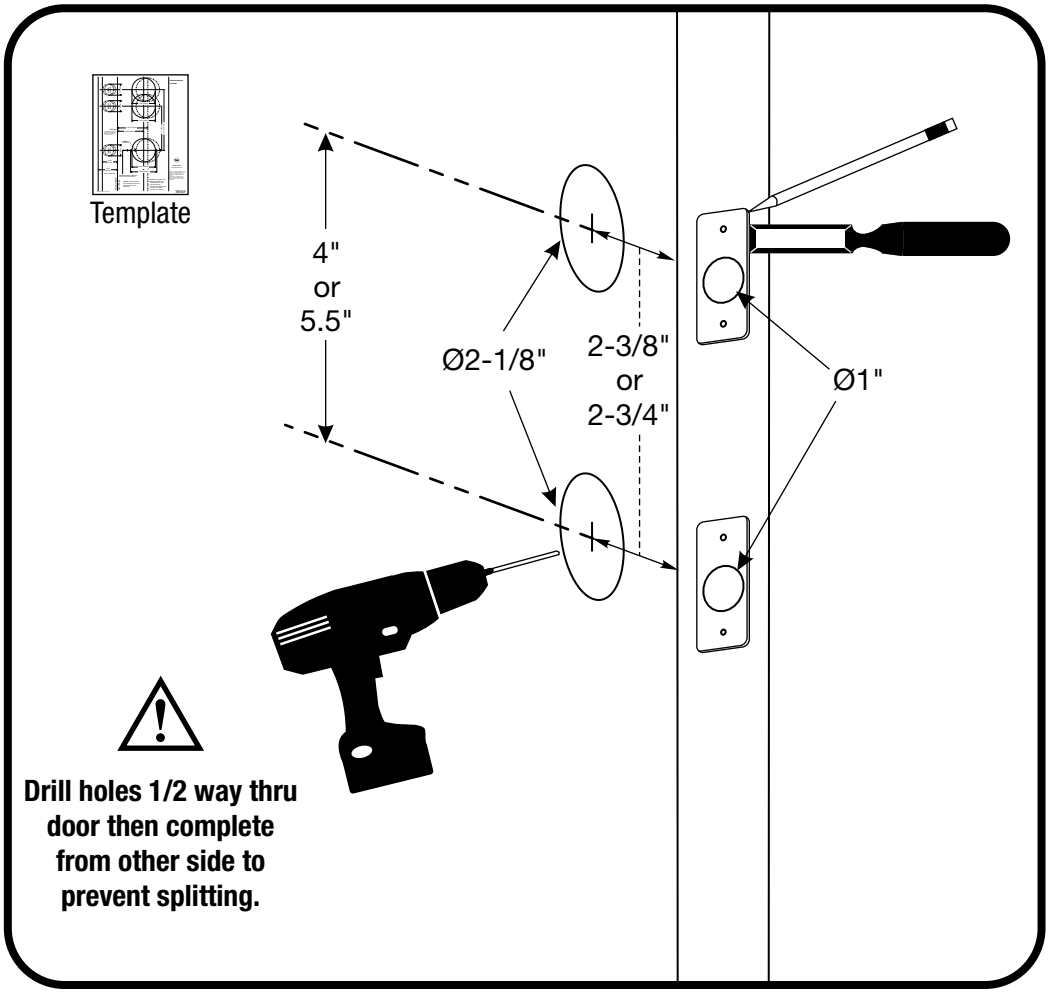

2 Installing Strike Plates

7-16 / 8-32 x 1" UNCWS

x4

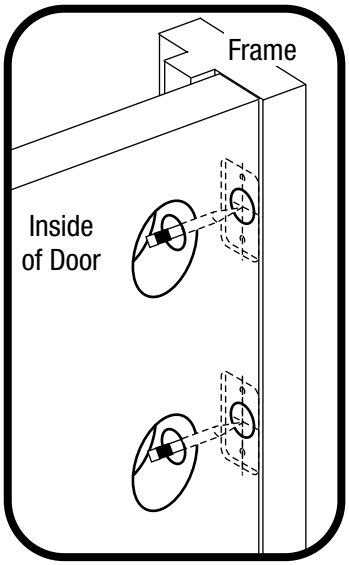

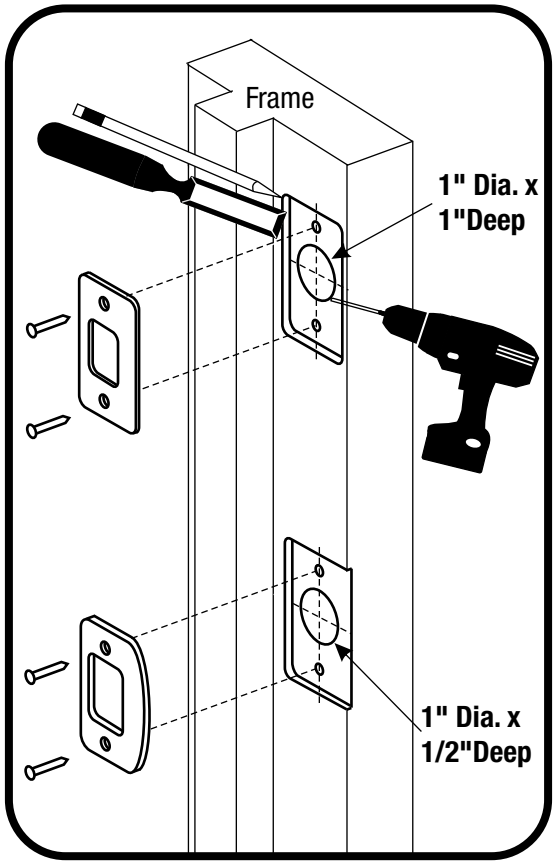

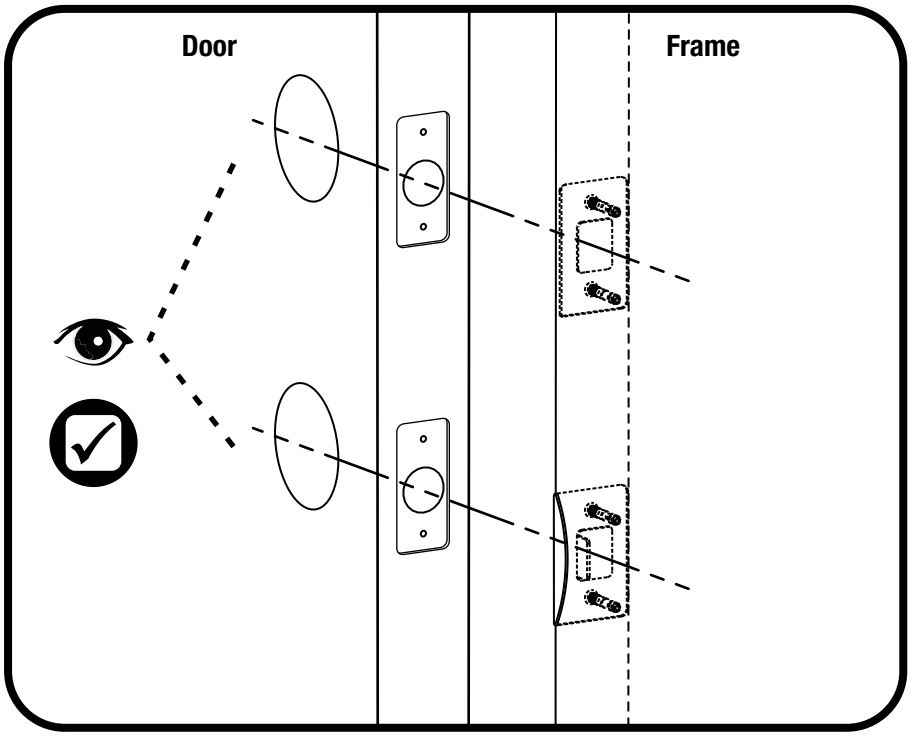

Determining Handing

The hand of a door is determined from the secure side of the door. The term "secure" means the side from which you initially unlock and enter.

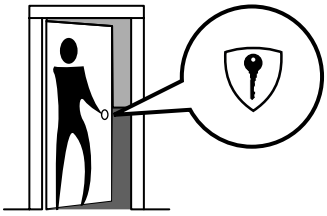

Left Hand “LH”, Hinges Left.
Open Inward.

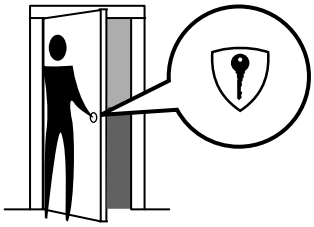

Left Hand Reverse "LHR", Hinges Left.
Open Outward.

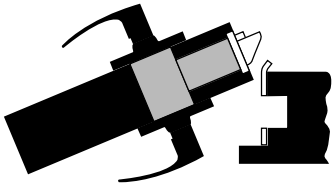

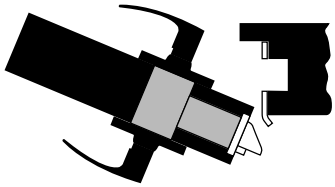

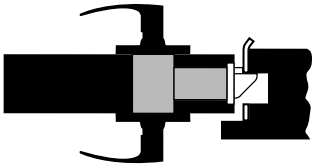

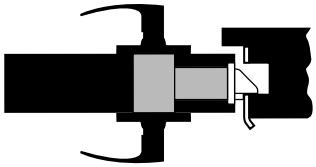

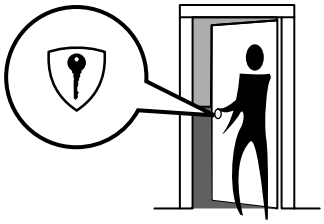

Right Hand "RH", Hinges Right.
Open Inward.

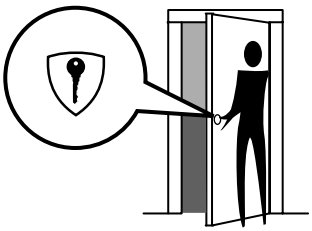

Right Hand Reverse "RHR", Hinges Right.
Open Outward.

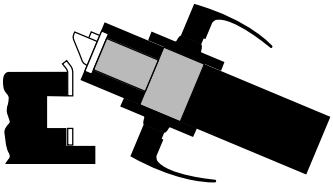

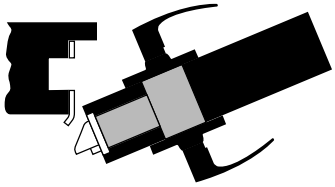

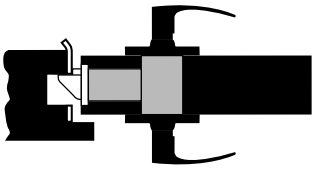

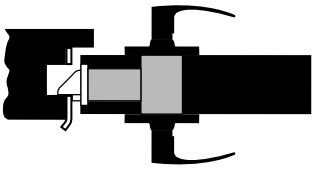

3 Changing Handing *(if necessary)*

4" Left Hand to 4" Right Hand Shown

4-24 x 1/4" PPHMS

x2

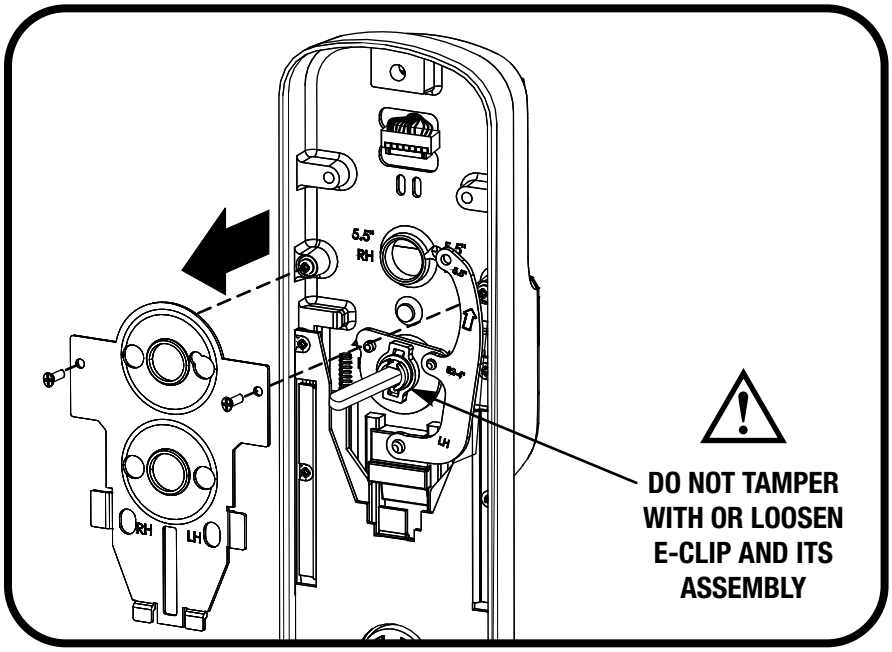

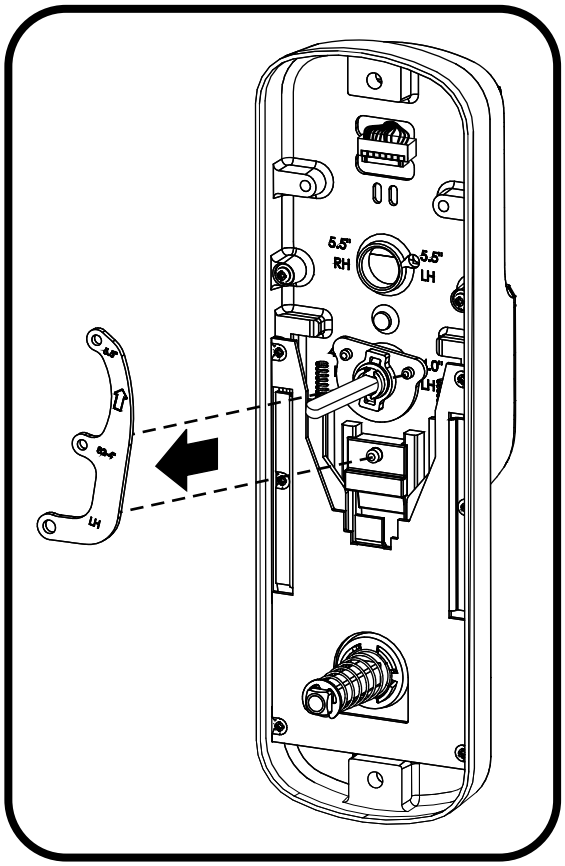

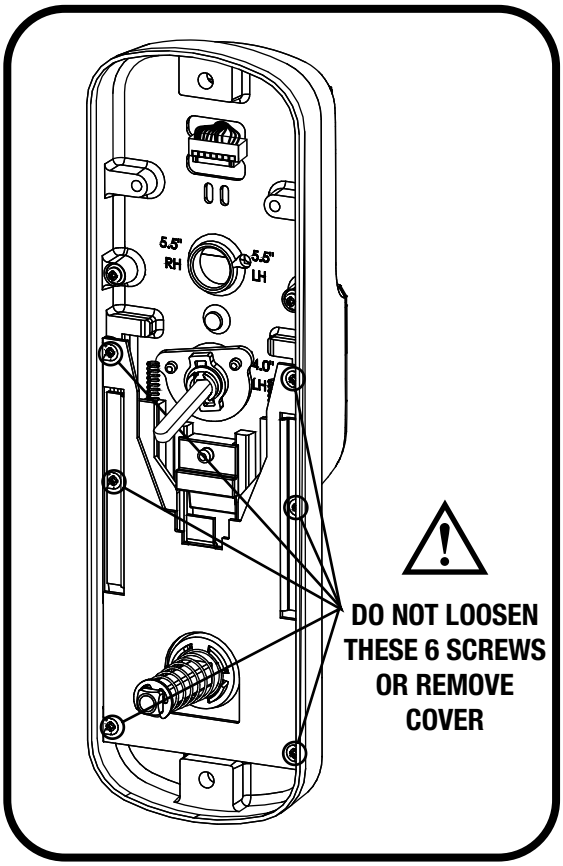

3 Changing Handing *(if necessary)* continued

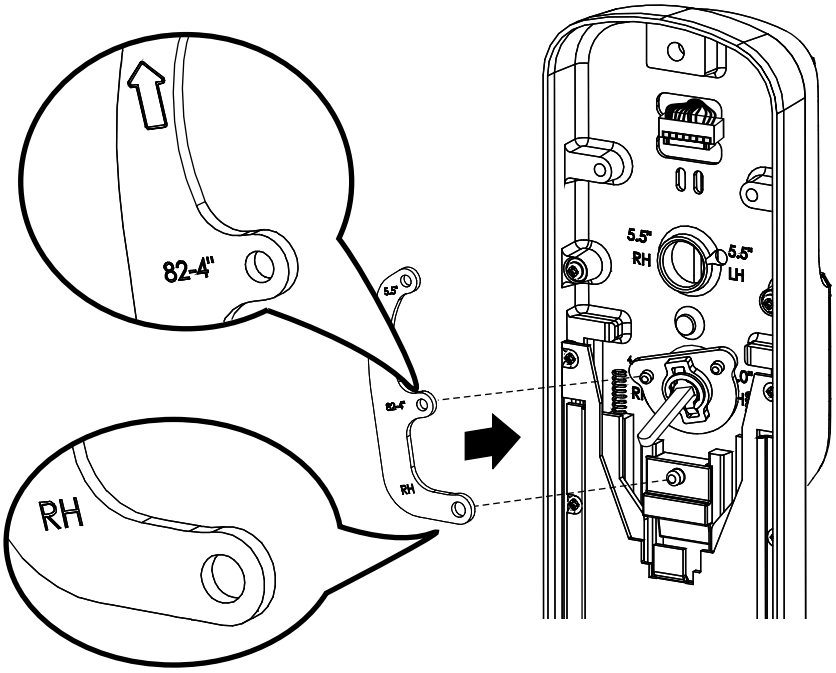

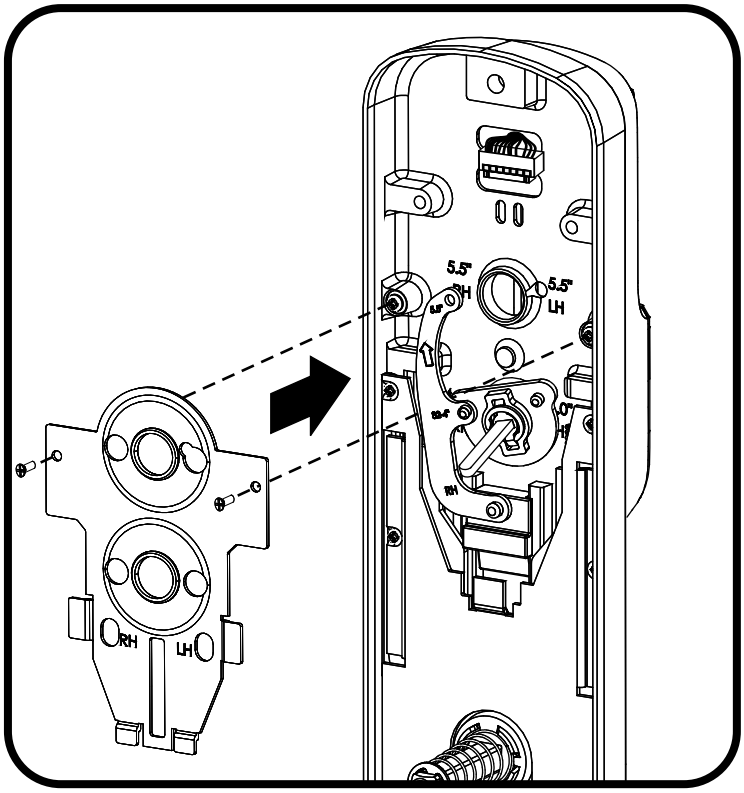

Lockset Handing Configurations

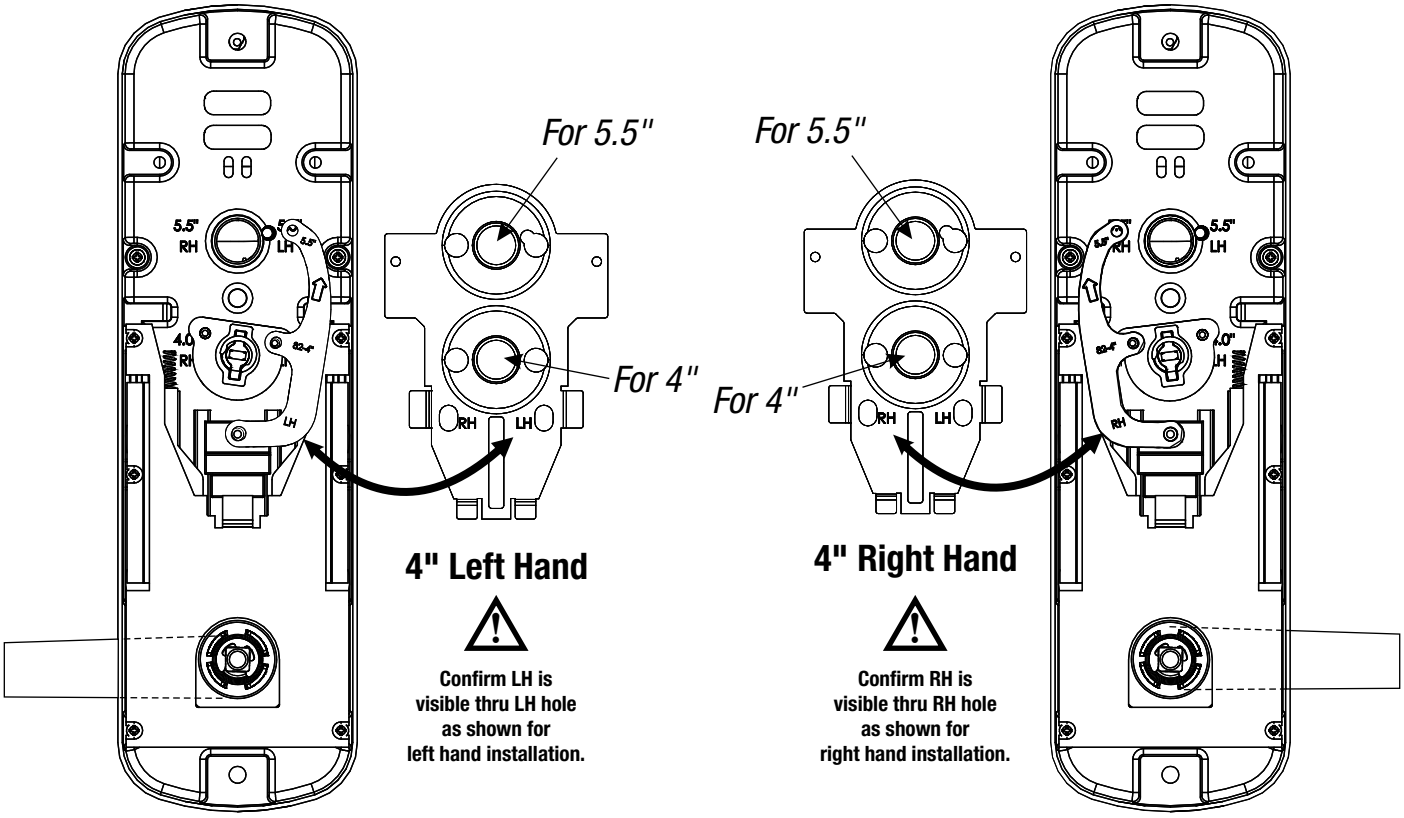

4" Left Hand

Confirm LH is visible thru LH hole as shown for left hand installation.

4" Right Hand

Confirm RH is visible thru RH hole as shown for right hand installation.

Test Lever and Thumbturn

After handing is changed, check that lever and thumbturn rotate freely.

4 Installing Fire Cup

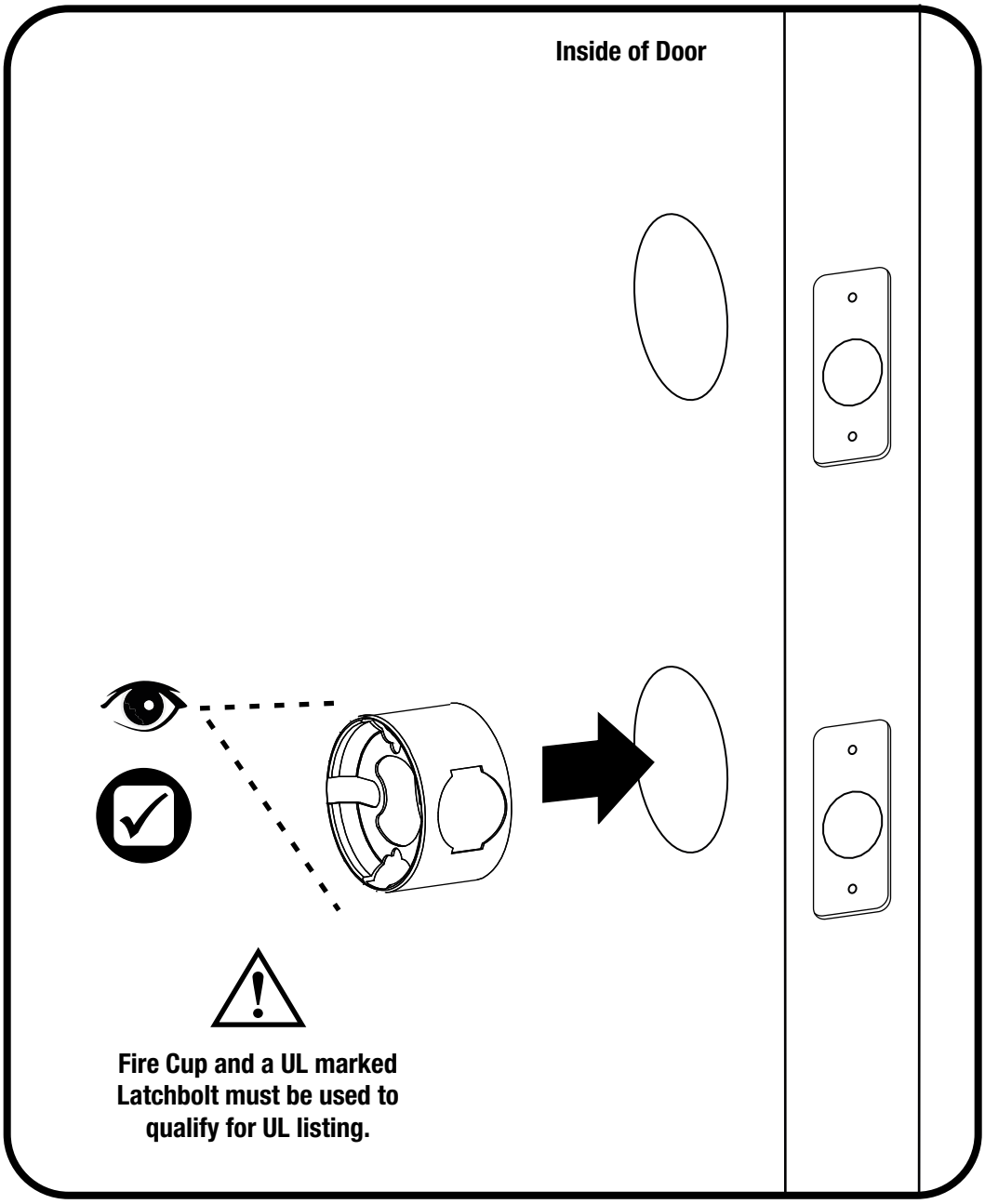

5 Adjusting Deadbolt Latch

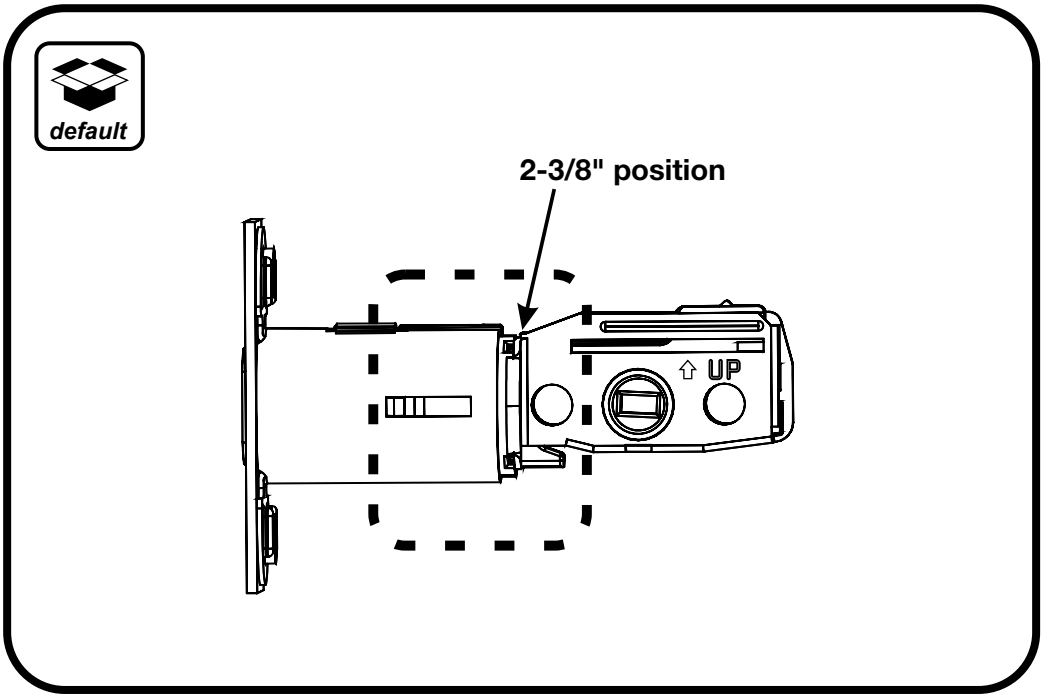

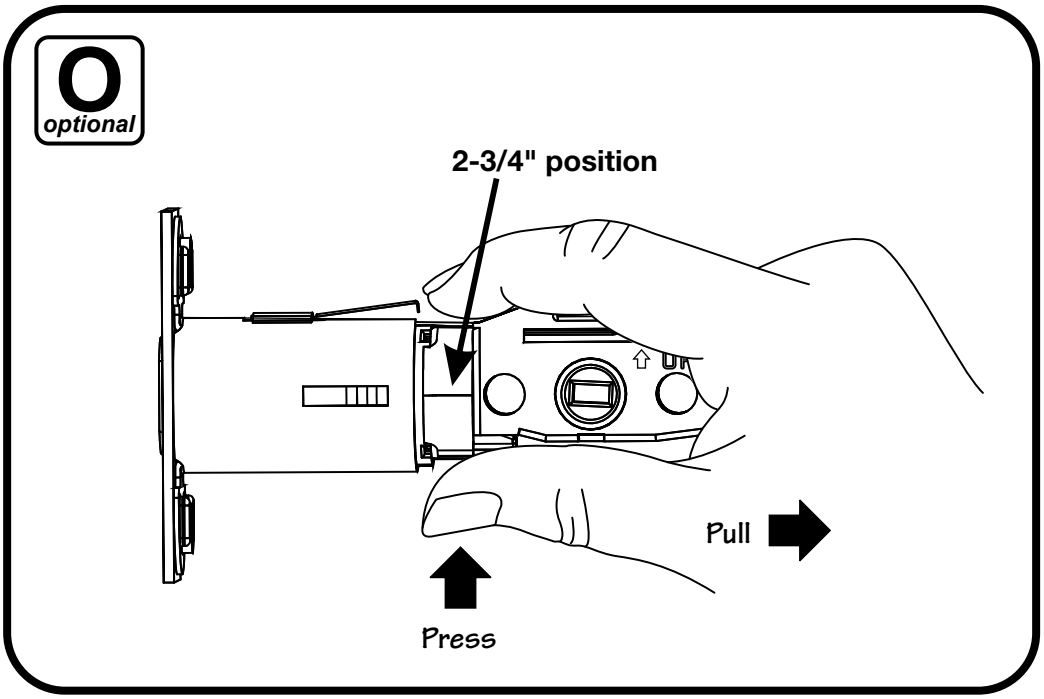

6 Installing Deadbolt Latch & Latchbolt

7-16 / 8-32 x 1" UNCWS

x4

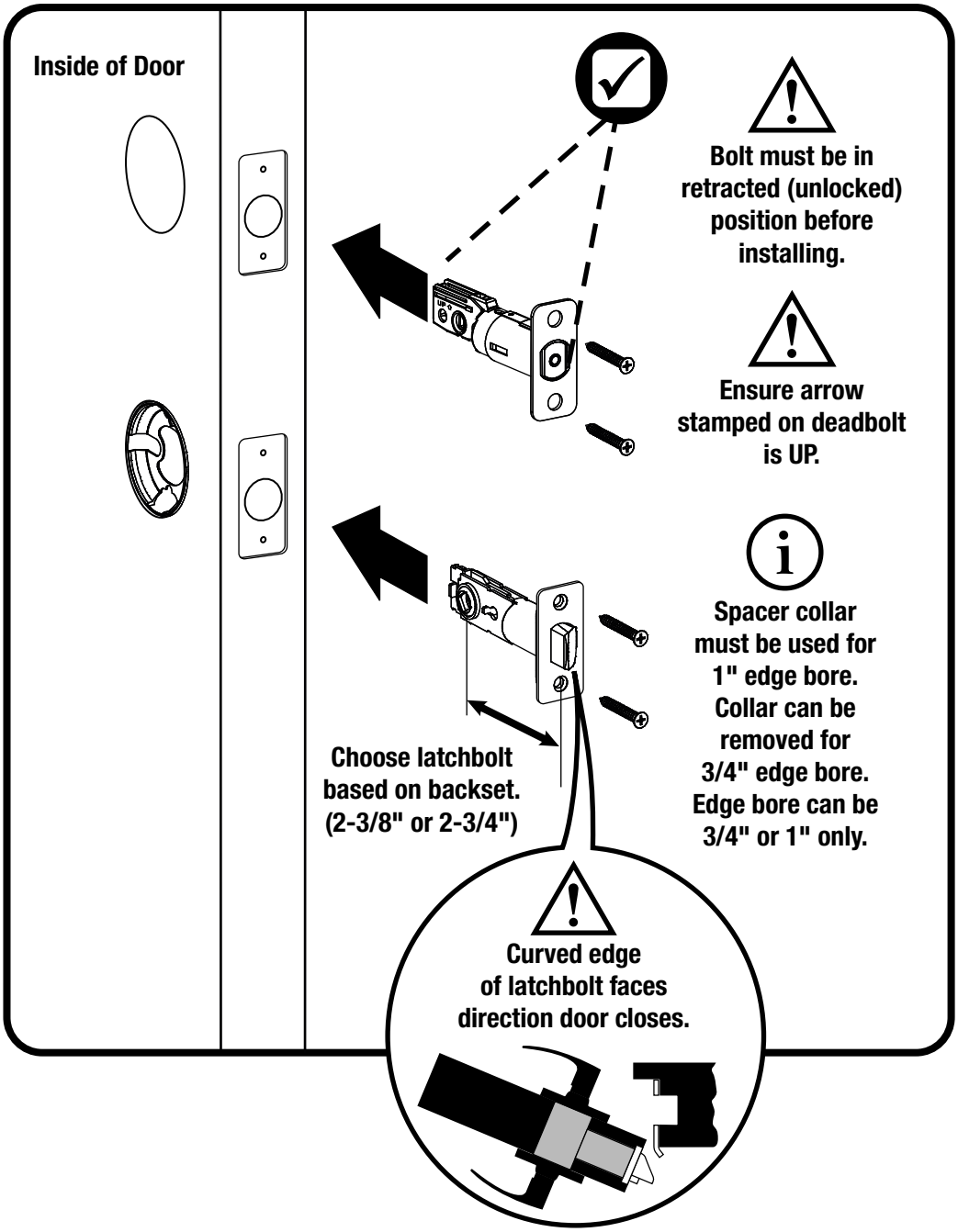

7 Installing Exterior Deadbolt

M6x44 PPHMS for standard door thickness shown

x2

Choose through bolt appropriate for your door thickness.

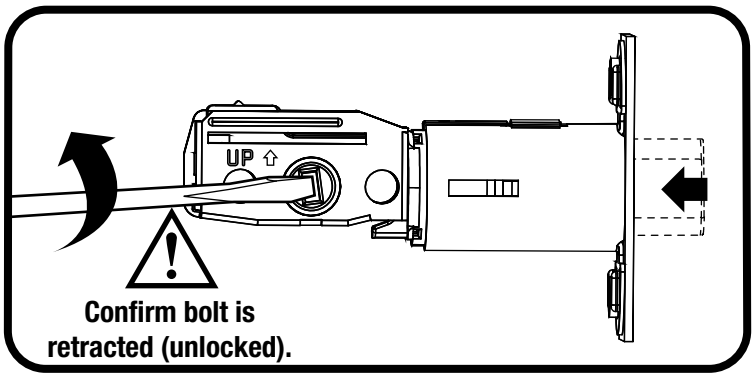

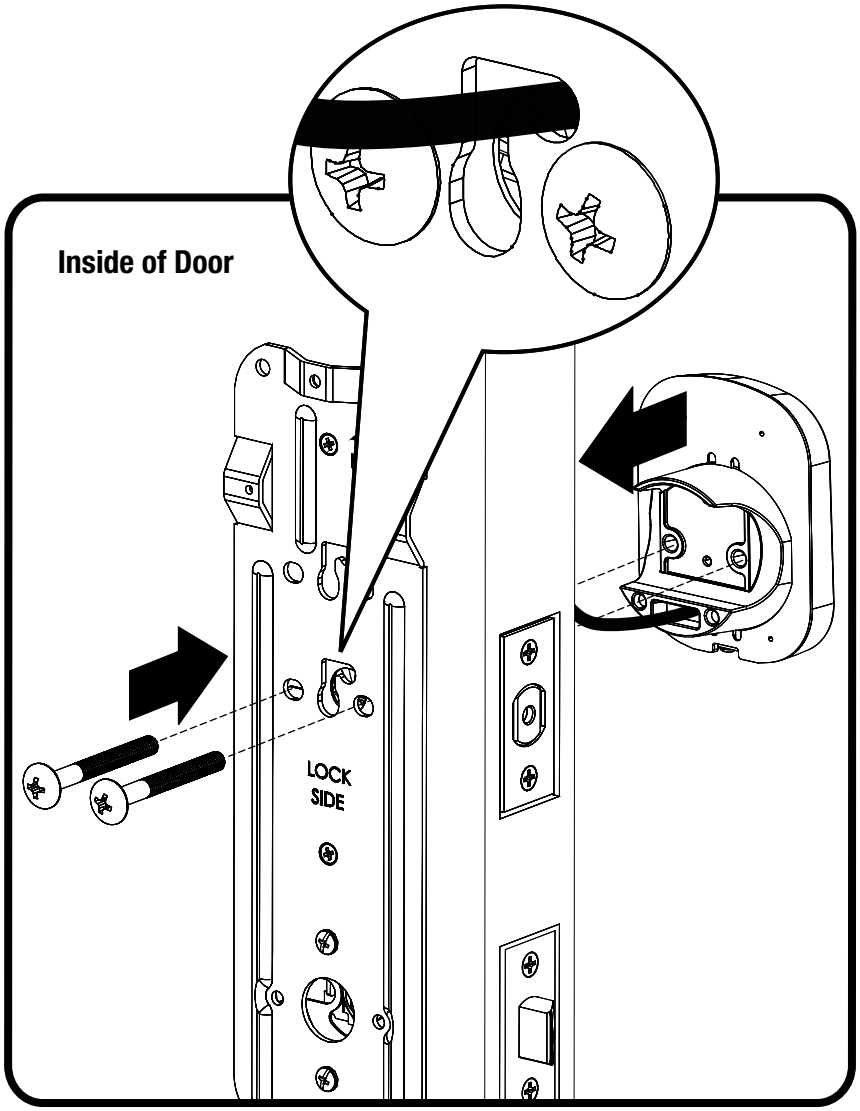

8 Installing Lock Chassis

10-32 x 1-1/2" PPHMS

x2

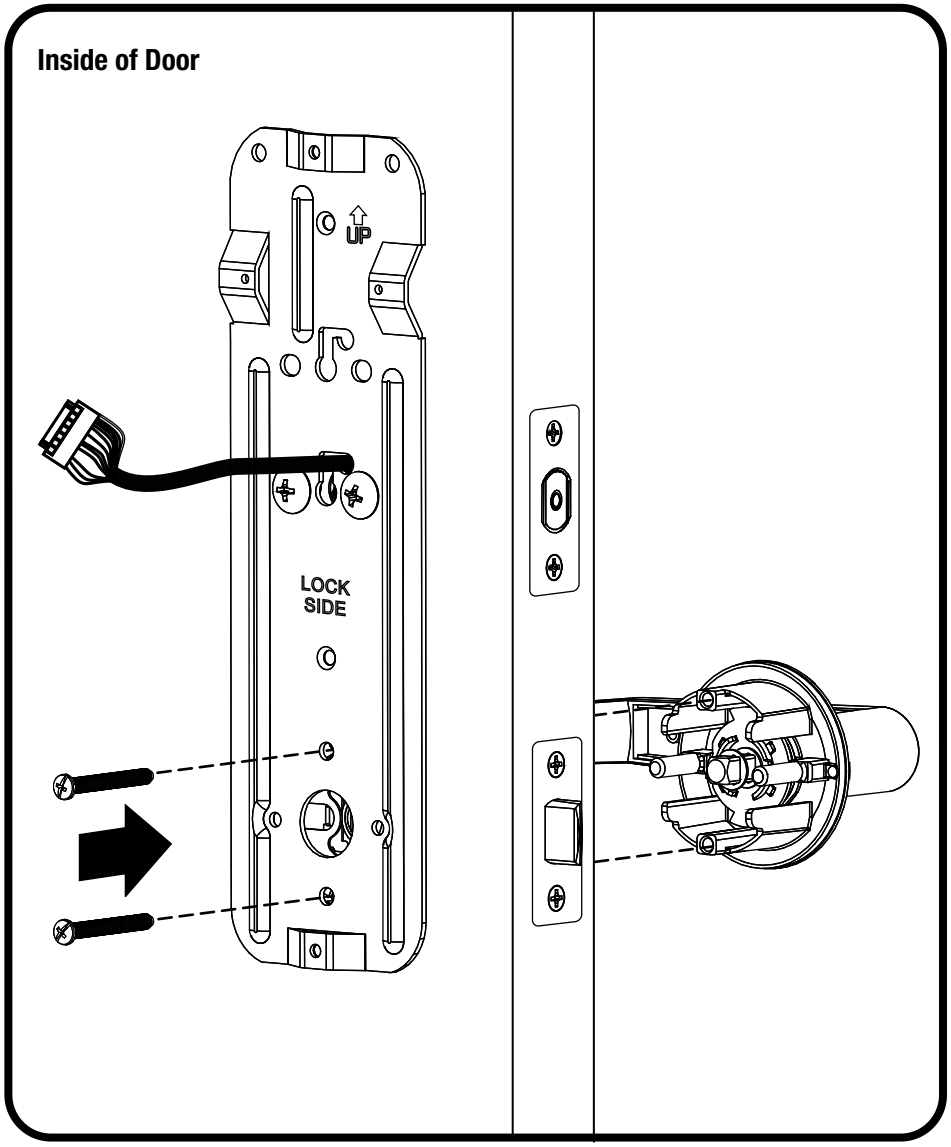

9 Securing Back Plate to Door

#6-32 x 1/2" POHMS

x2

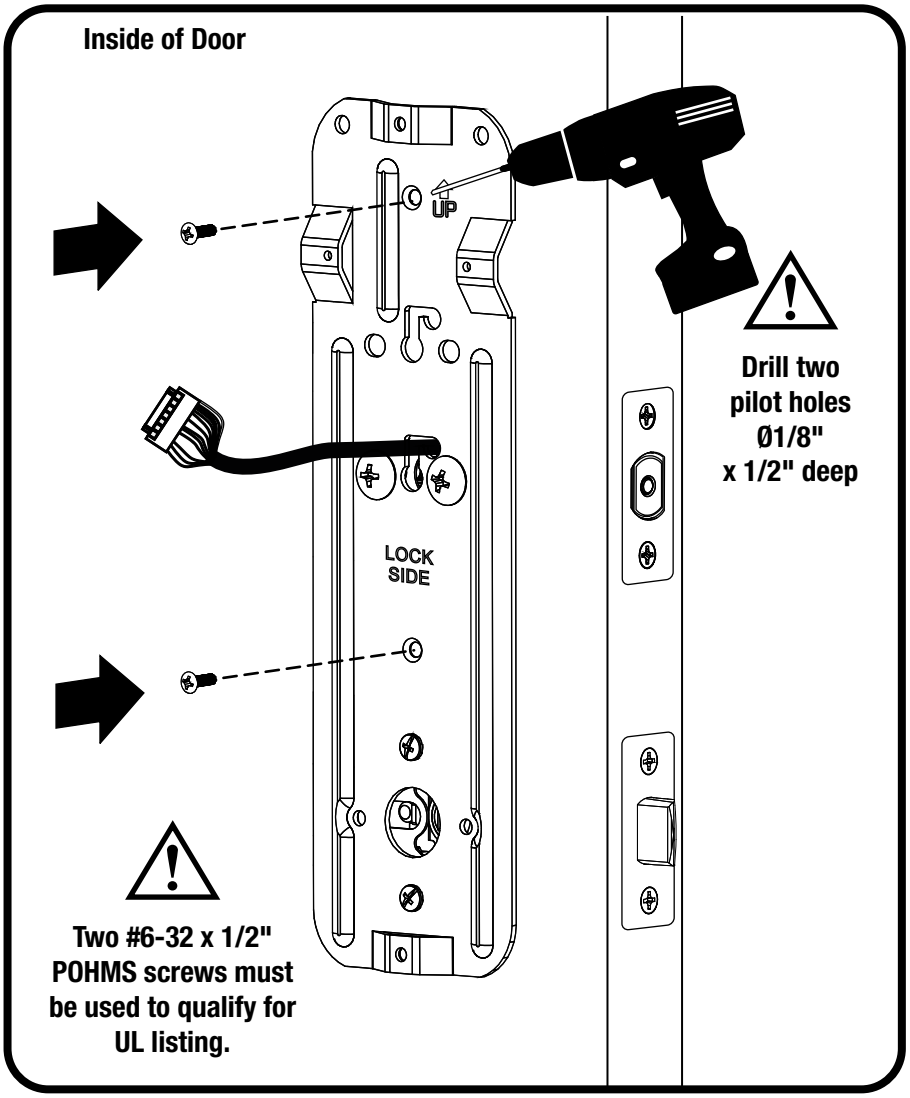

Testing Latchbolt Operation

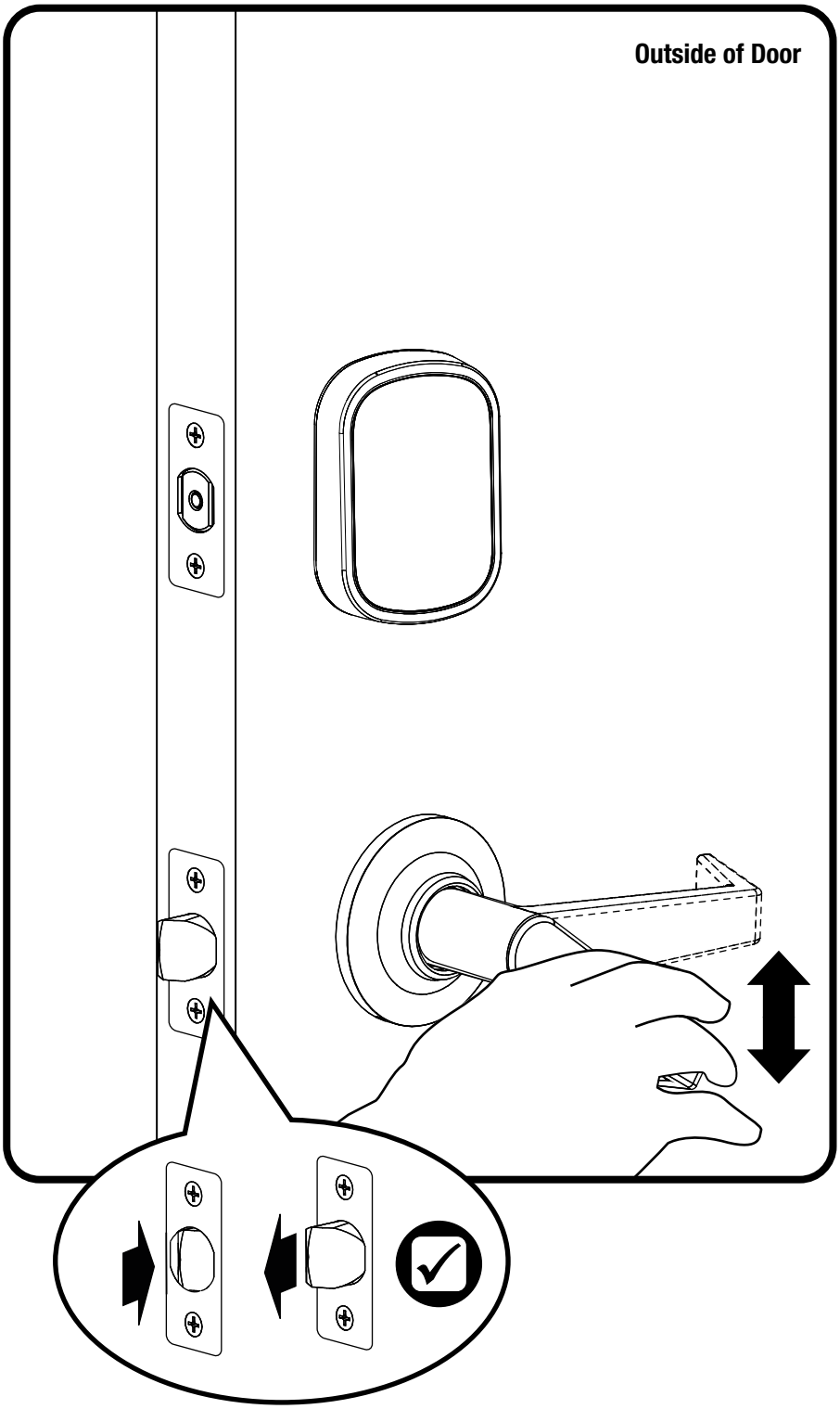

10 Attaching the Cable Assembly

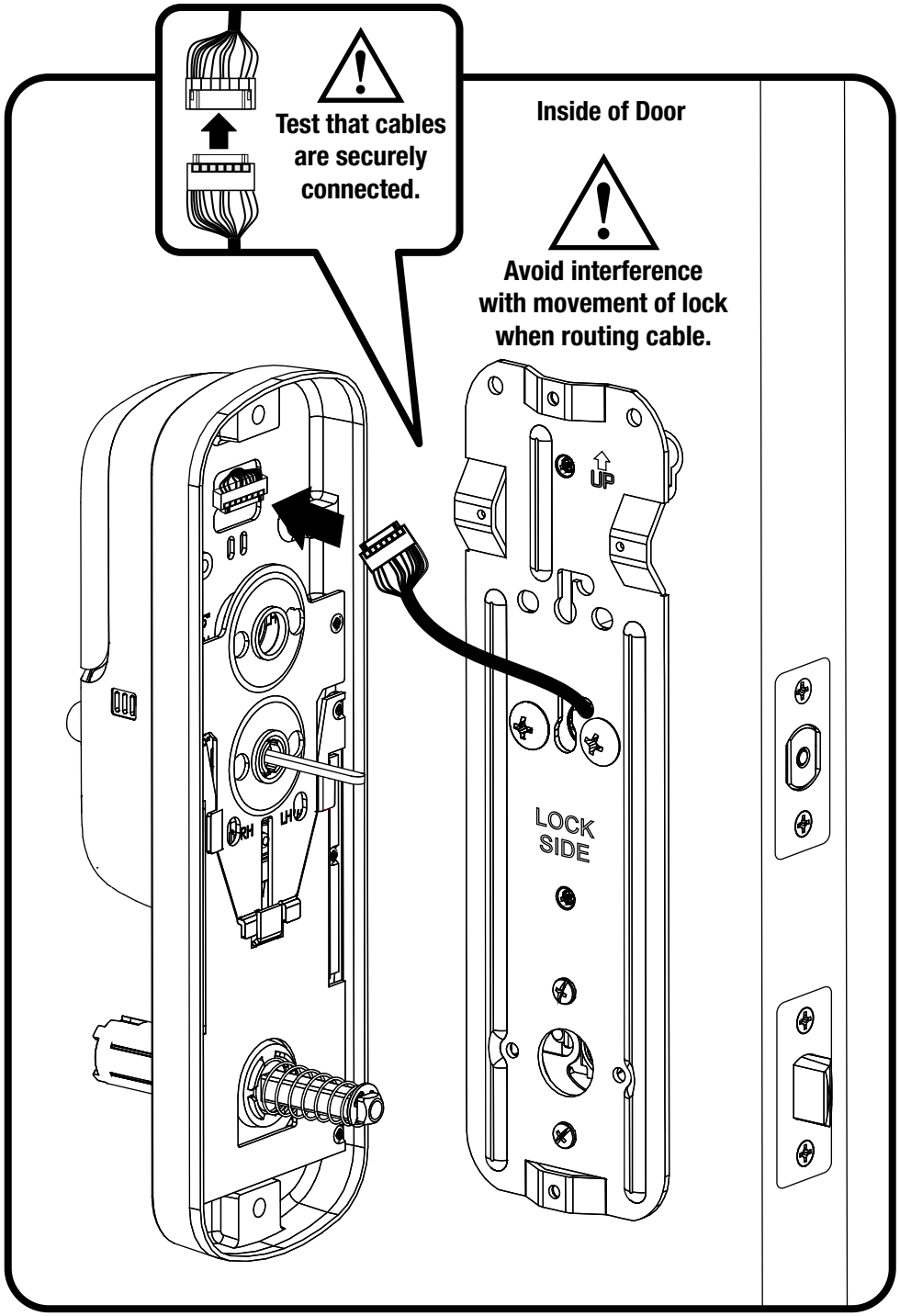

11 Installing Interior Lock

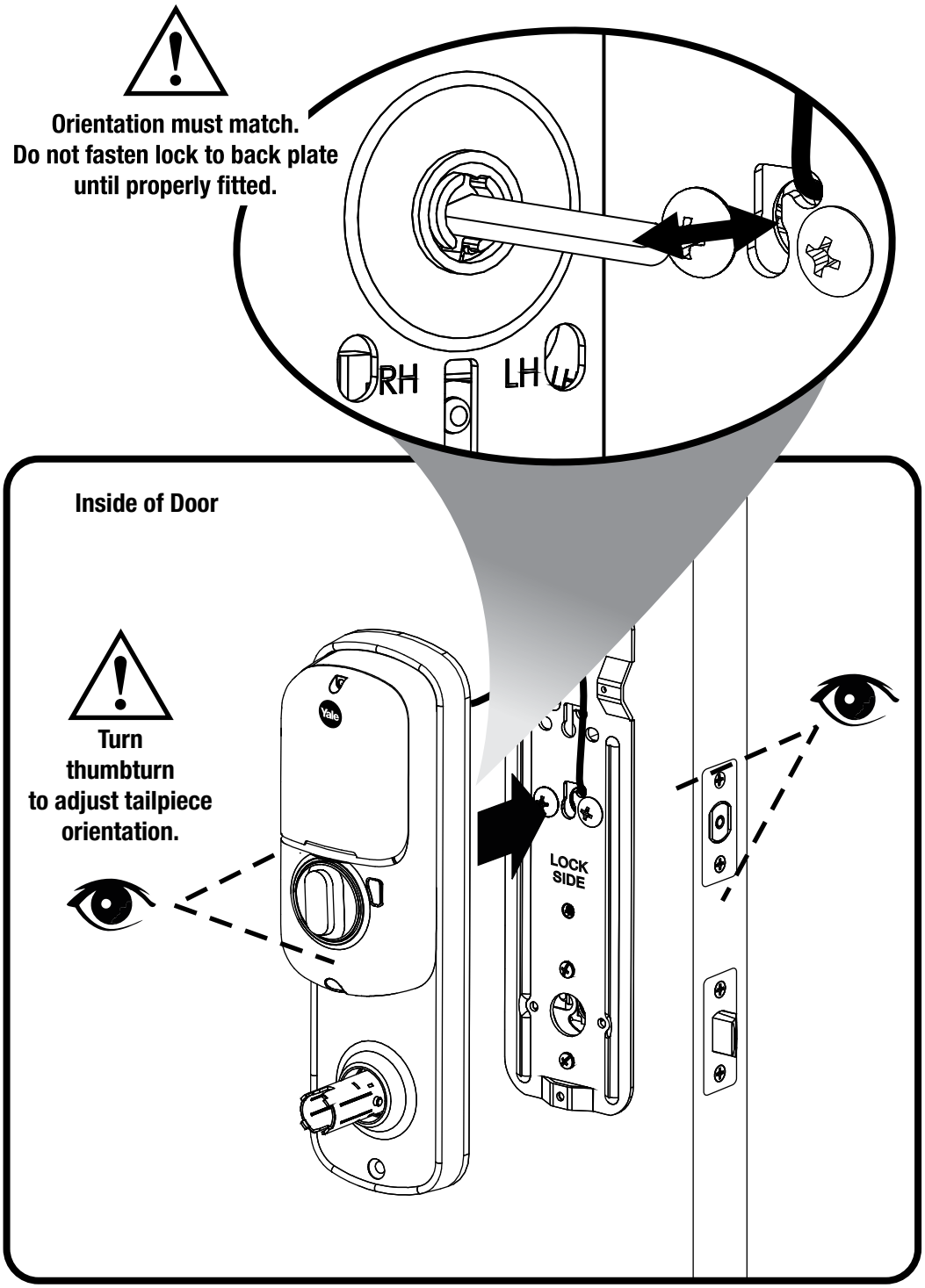

11 Installing Interior Lock continued

10-32 x 5/8" POHMS

x1

6-32 x 1" PPHMS

x2

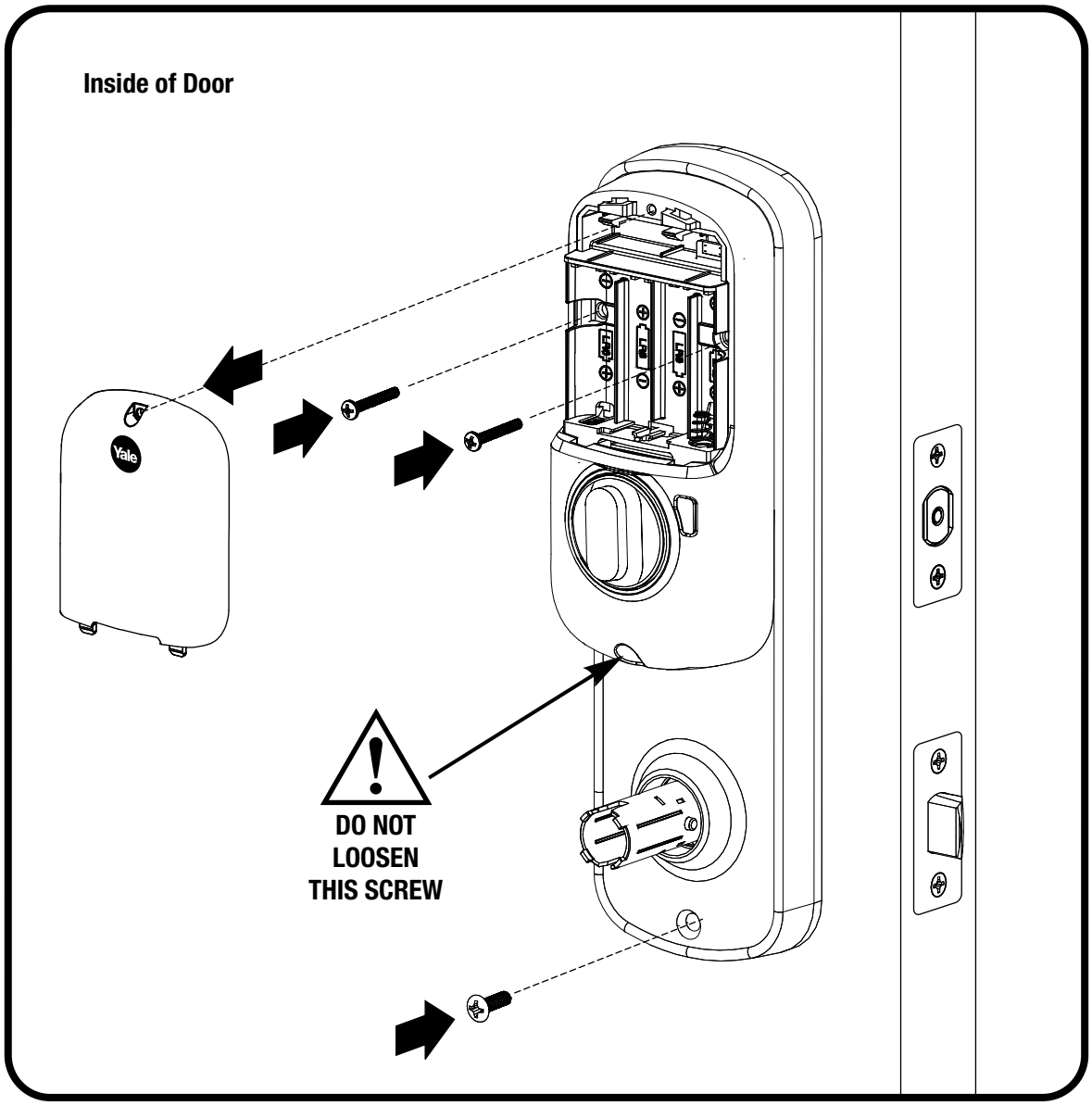

12 Installing Interior Lever

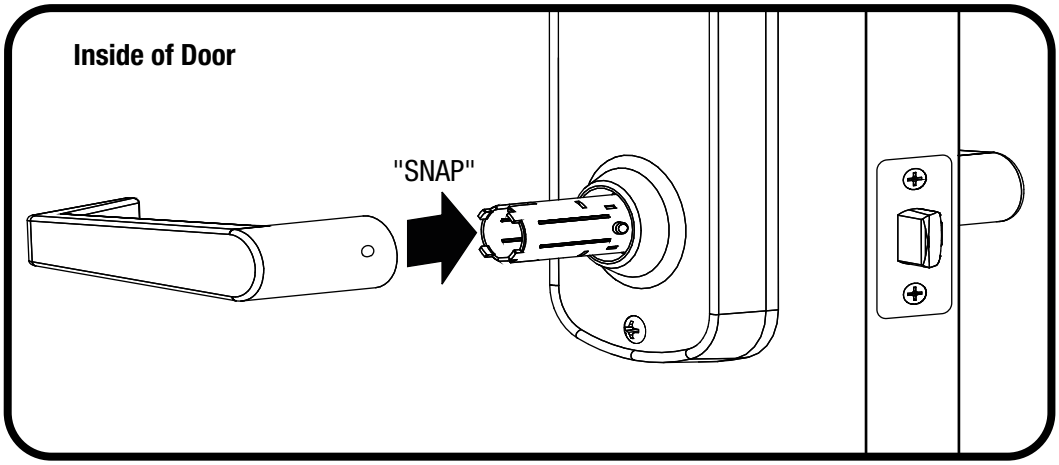

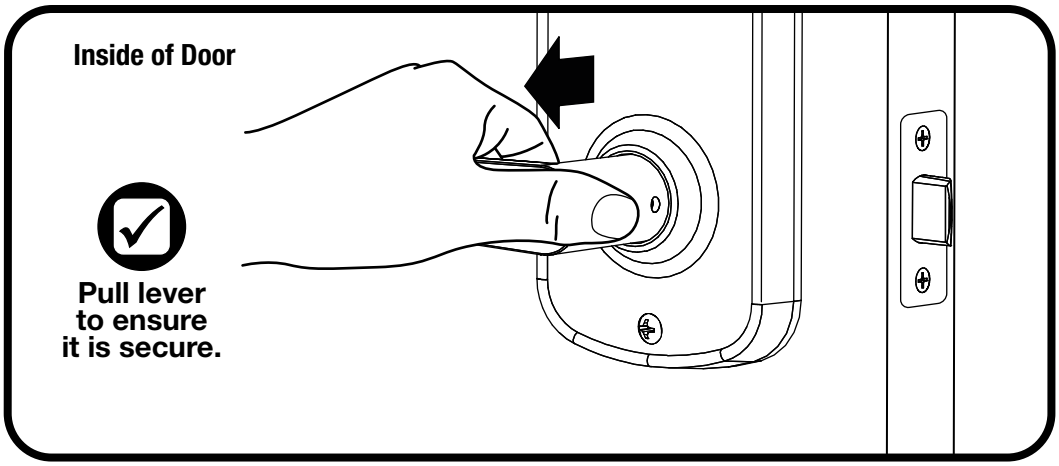

Testing Final Latchbolt Operation

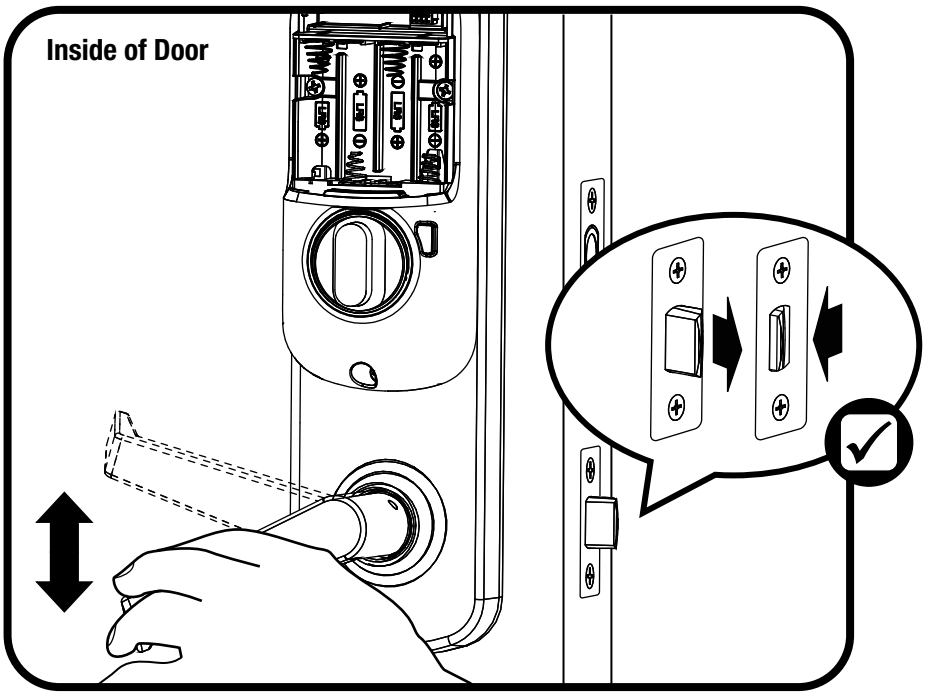

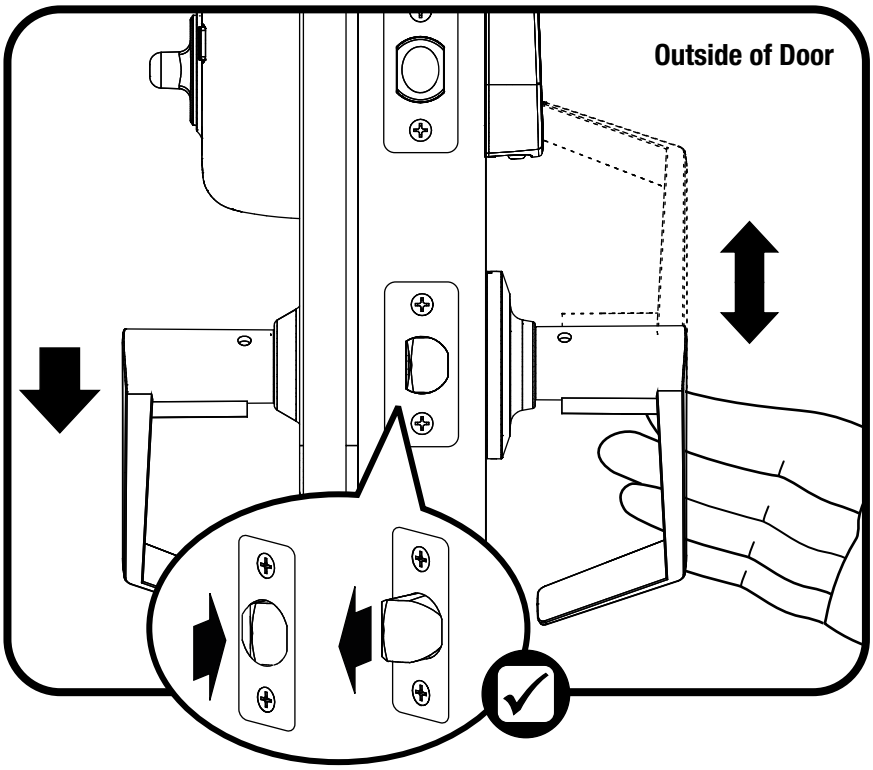

Testing Final Deadbolt Operation

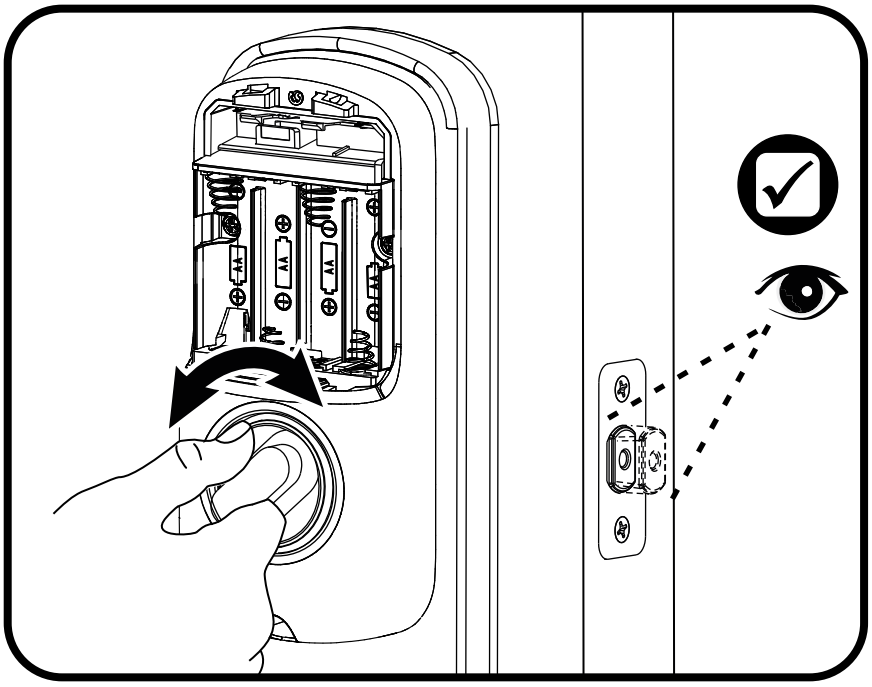

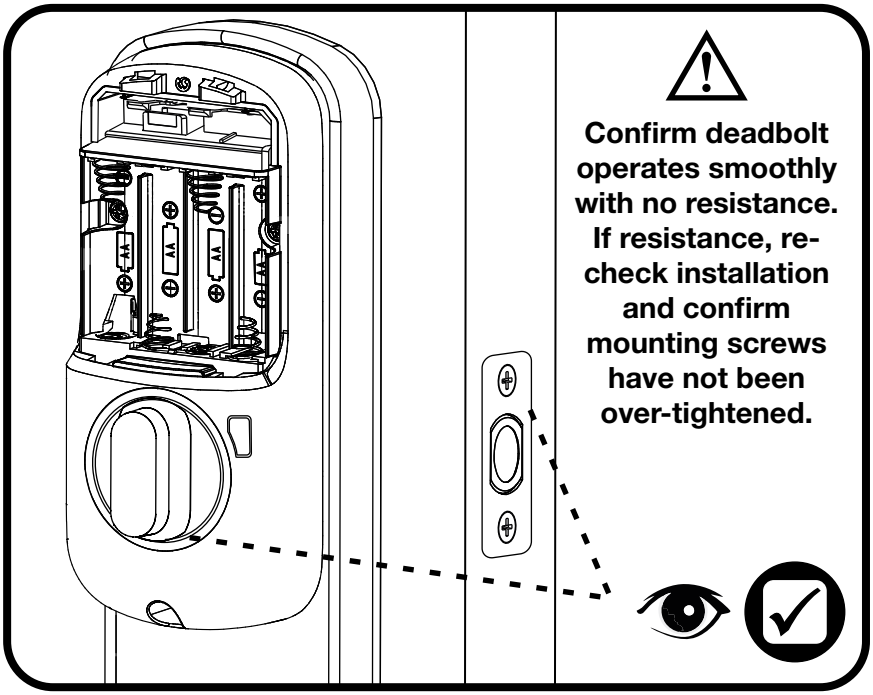

13 Installing Optional Smart Module

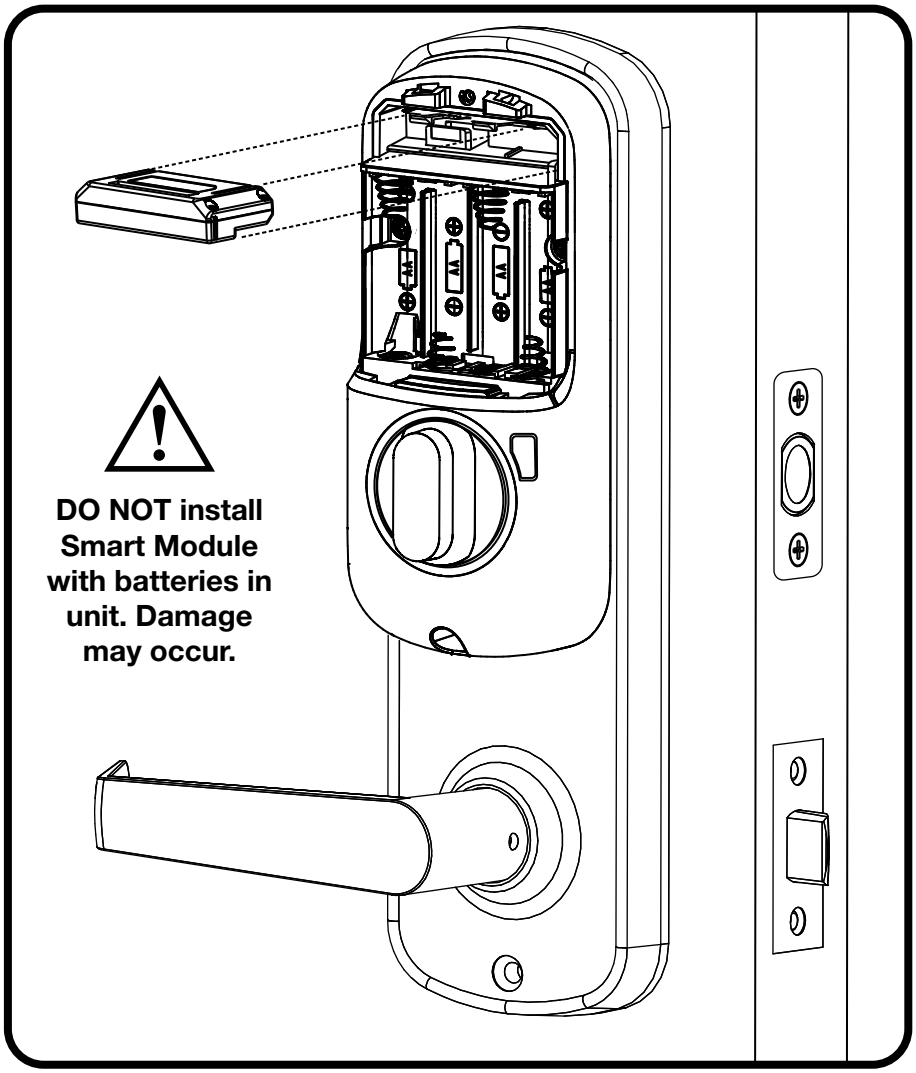

14 Installing Batteries & Cover

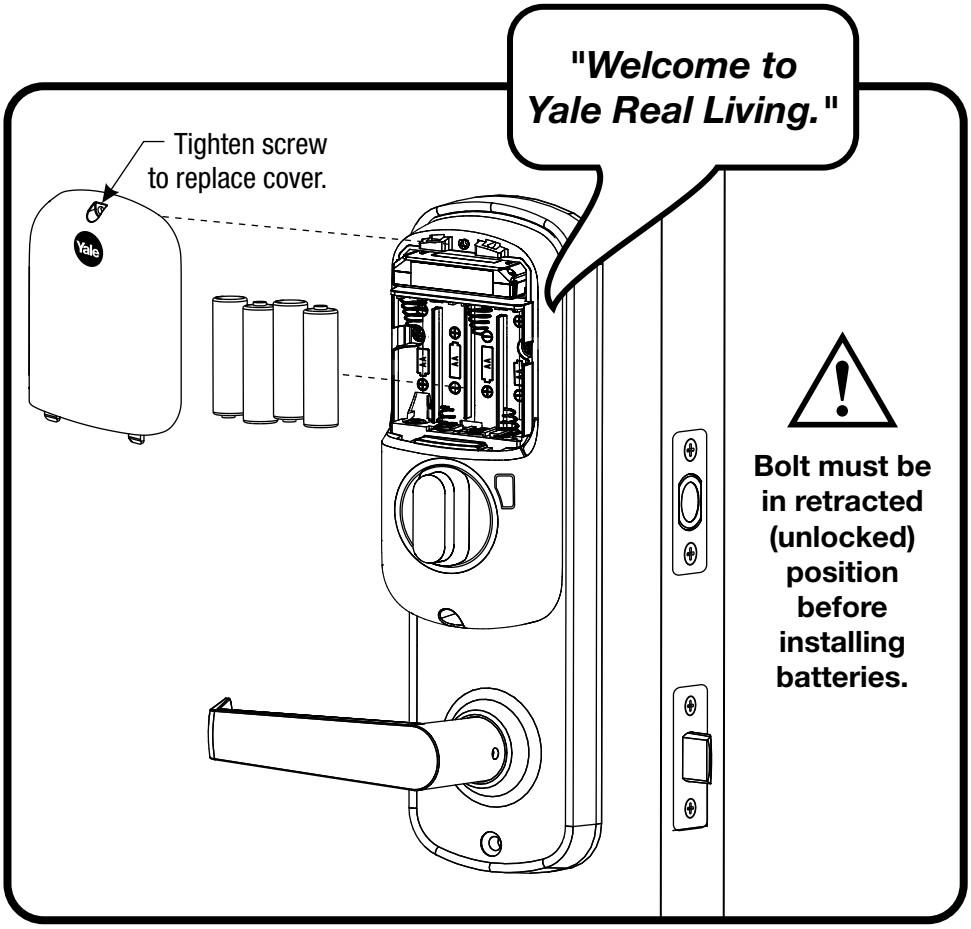

Handing the Lock

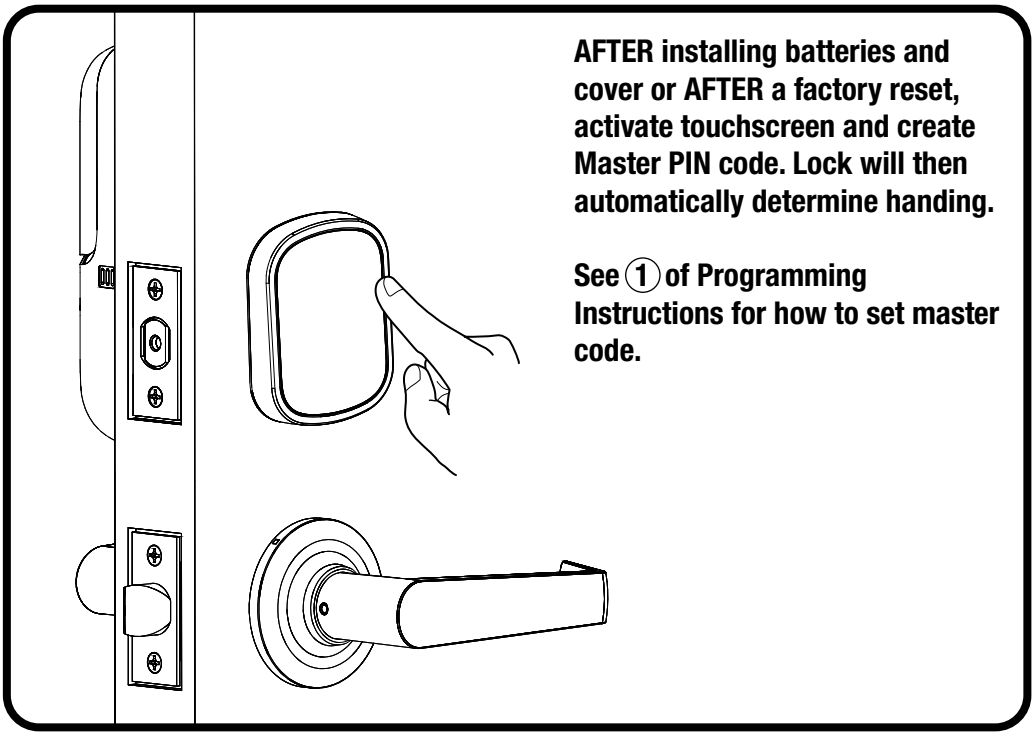

AFTER installing batteries and cover or AFTER a factory reset, activate touchscreen and create Master PIN code. Lock will then automatically determine handing.

See ① of Programming Instructions for how to set master code.

Congratulations, you've installed the
Yale® Assure Lock® Interconnected Key Free Touchscreen (YRC256)!
Continue with the Programming Instructions
to customize your product.

Hardware Troubleshooting

Cycle lock in both the locked and unlocked positions. If problems are found:

Bolt will not extend and lock jam alarm occurs a. Confirm manual operation. b. Enter your Master PIN code. c. With the bolt retracted, press menu Option 3 for Advanced Lock Settings. d. Press Option 5 to rehand the lock. e. Test the operation; locking the door via the keypad.
Door is binding a. Check that door and frame are properly aligned and door is free swinging. b. Check hinges: They should not be loose or have excessive wear on knuckles.
Bolt will not deadlock a. Check for sufficient clearance of the bolt within the strike-side jamb. Correct this by increasing the depth of the pocket for the bolt. b. Check for misalignment of bolt and/or strike which may be preventing bolt from properly entering the strike. With the door open, extend and retract the bolt; if it is smooth, check the strike alignment.
Bolt does not extend or retract smoothly a. Bolt and strike are misaligned, see above. b. Check the backset of door relative to adjustments already made to bolt. c. Verify proper door preparation and re-bore holes that are too small or misaligned. d. Verify touchscreen wire harness is routed properly (see Step 10). e. Verify bolt is installed with correct side up (see Step 6).
Keypad numerics are scrolling Remove interior lock and check to ensure that the wire harness is routed properly (see Step 10).

NOTE TO INSTALLER AND CONSUMER
While Yale® has included several features to prevent lockout (9-Volt battery jumper, low battery warnings), it is still possible for a lockout situation to occur. Because this product does not have a mechanical override (a key), Yale® recommends to use this product in an environment where there are additional entry points into the dwelling.

Programming Instructions

Exterior Escutcheon

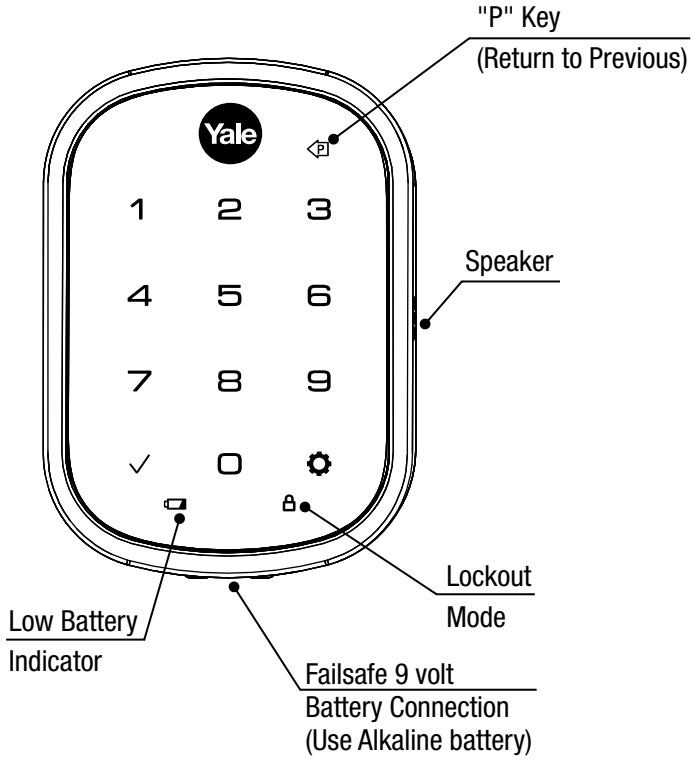

Interior Escutcheon

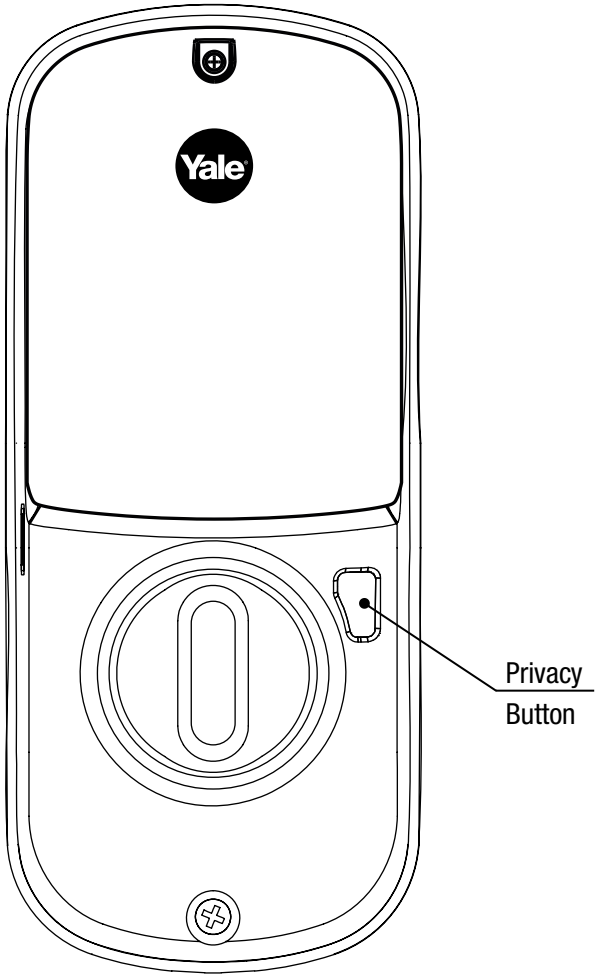

Lock Activation

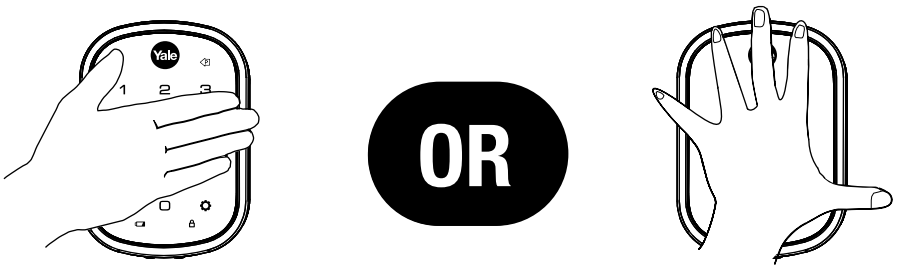

Master PIN Code must be created before any further programming.
Max User Codes = 250 with Z-Wave Plus or Zigbee network module
Max User Codes = 25 without network module or with iM1 network module
Max User Codes = 12 with Bluetooth

1 Creating Master PIN Code

Creating a Master PIN Code must be performed upon installation or after resetting the lock to factory default. Programming and use of lock is not possible until this step has been successfully completed.

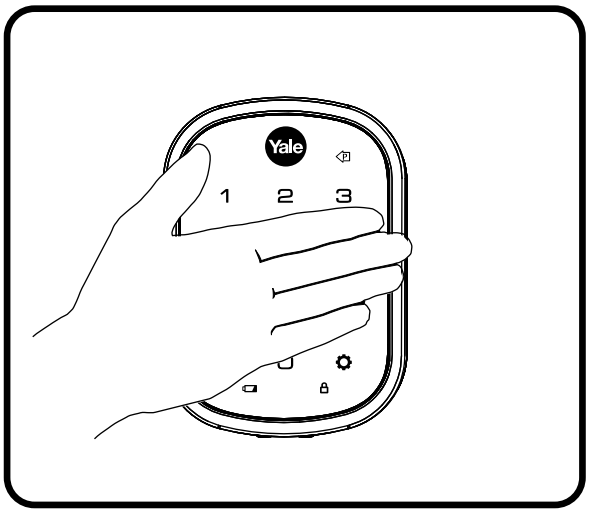

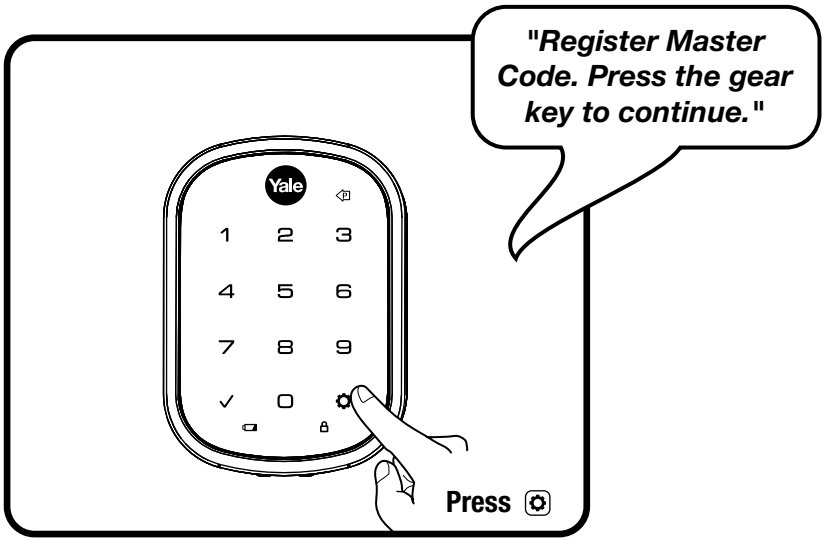

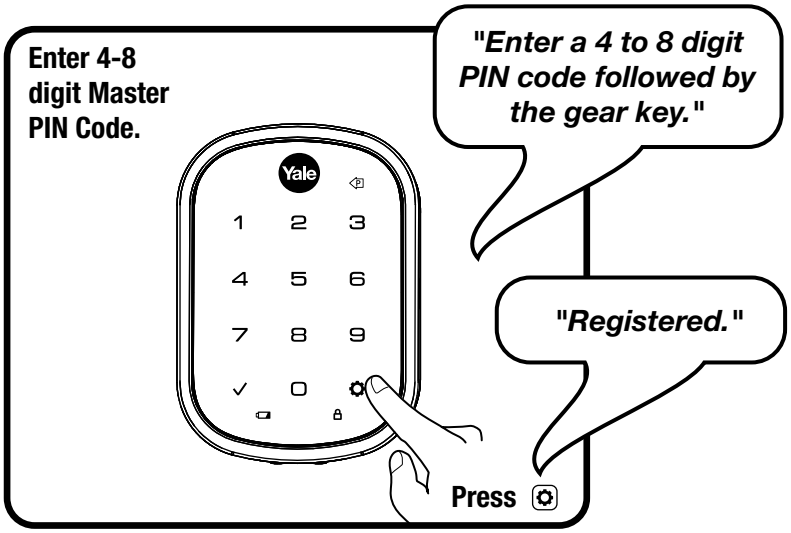

2 Creating User PIN Codes

Master PIN code must be created first.
*Max user codes = 250 with Z-Wave or Zigbee network module
Max user codes = 25 without network module or with iM1 network module
Max user codes = 12 with Bluetooth

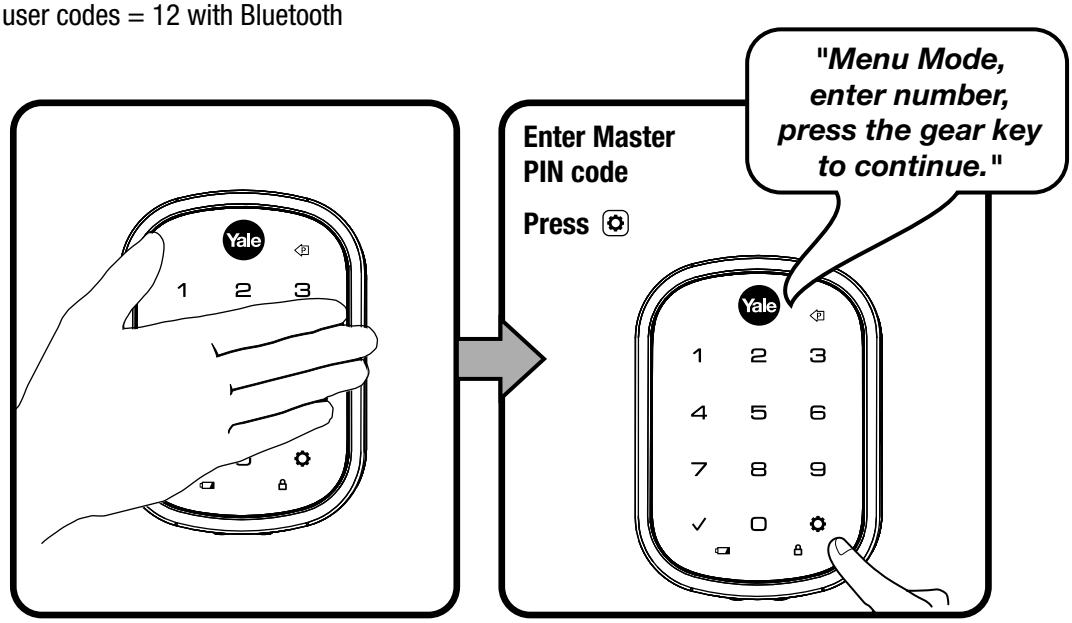

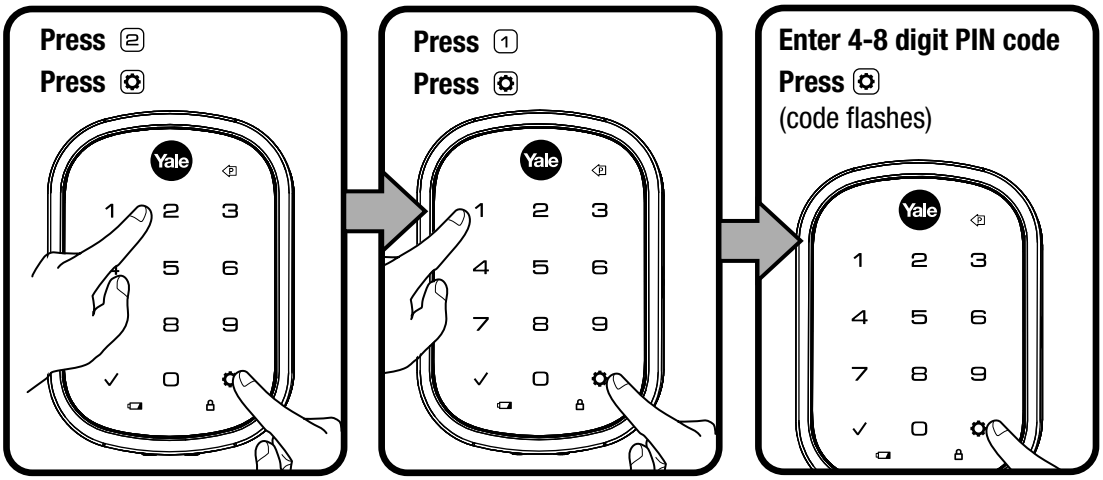

Adding more *User Codes:

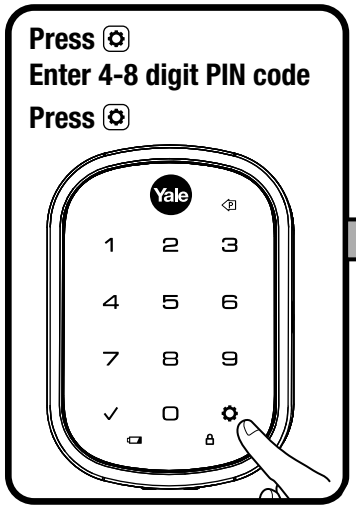

To end programming:

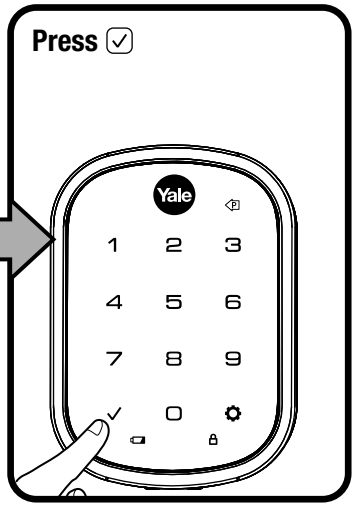

3 Unlocking Door with PIN Code

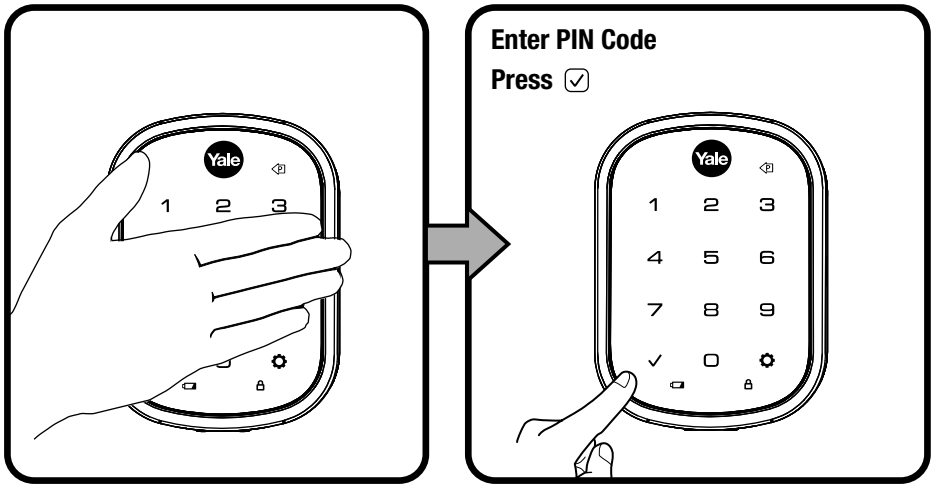

Code Chart Duplicate if necessary

PIN Code Management (With Network Module - Up to 250 Users)		
User Type	User Name	PIN Code
Master		
User		
User		
User		
User		
User		
User		
User		
User		
User		
User		
User		
User		
User		
User		
User		

Resetting Lock to Factory Default

When resetting the lock, all user codes, including the Master PIN code*, are deleted. All programming features are reset to original default settings (see below).

1. Remove the battery cover and batteries.
2. Remove the interior lock to access the reset button hole. (See image at right.)
3. Re-insert 3 batteries and insert a small screwdriver into the hole; holding the reset button for 3 seconds.
4. While still holding the reset button, insert the 4th battery and hold the reset button for an additional 3 seconds.
5. Release the reset button.
6. Re-install the interior lock onto the door.

Upon reset, Master PIN Code creation is the only option available and must be performed prior to any other programming of the lock.

For best results, the lock should be installed on the door when resetting the lock to factory default. If the process was done and the lock was not installed on the door, review the Re-Handing instructions listed in Hardware Troubleshooting.
Please use this procedure only when network primary controller is missing or otherwise inoperable.

Interior Lock (4" Shown)

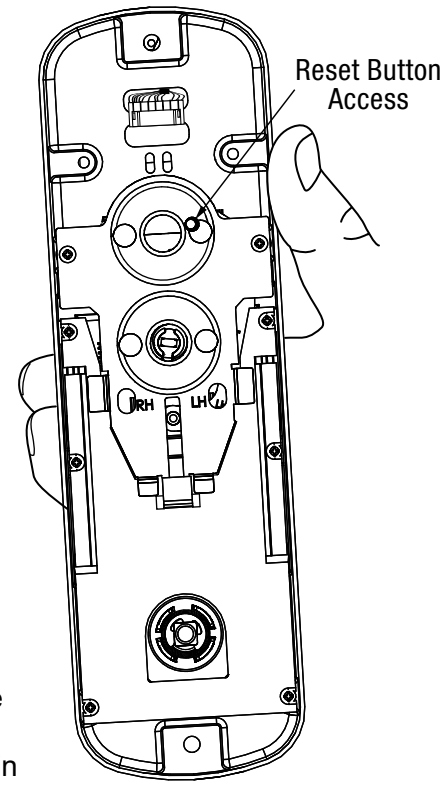

Factory Settings

Settings	Factory Setting
Master PIN Code	Registration ***required****
Automatic Re-lock	Disabled
Inside Indicator Light	Disabled (Off)
One Touch Locking	Enabled
Privacy Button Setting	Disabled
Volume Setting	Enabled (Low)
Language Setting	English
Lockout Mode	Disabled
Wrong Code Entry Limit	5 Times
Shutdown Time	60 Seconds

*The Master PIN code must be registered prior to any other programming of the lock.

Definitions

All Code Lockout Mode: This feature is enabled by the Master code. When enabled, it restricts all user (except Master) PIN code access. When attempting to enter a code while the unit is in Lockout, the RED locked padlock will appear on the screen.

Automatic Re-lock Time: After a successful unlock, the unit will re-lock automatically after duration selected in the **Advanced Lock Settings** (Main Menu selection #3).

Handing the Lock: Lock handing refers to which direction the bolt comes out of the door (right or left). If the lock was programmed off the door, the lock may need adjusting. Review Handing the Lock instructions and/or Re-Handing instructions listed in Hardware Troubleshooting.

Inside Indicator Light: Located on the interior escutcheon. Shows active status (Locked) of lock and can be enabled or disabled in the **Advanced Lock Settings** (Main Menu selection #3).

Language Setting Mode: Choosing English (1), Spanish (2) or French (3) becomes the (default) setting for the lock's voice prompts.

Low Battery: When battery power is low, the Low Battery Warning indicator flashes RED. If battery power is completely lost, use the 9Volt battery override. To use the 9V battery override apply 9V battery, in either direction, to terminals below the touchscreen for backup power option. Wake up the lock and enter your pin code to unlock the door.

Master PIN Code: The Master PIN code is used for programming and for feature settings. **It must be created prior to programming the lock.** The Master code will also operate (unlock/lock) the lock.

Network Module Setting: With the optional Network Module installed, this setting becomes available thru the Main Menu (7) and allows the lock to connect with a network controller.

One Touch Locking: When the latch is retracted, activating the keypad will extend the latch (during Automatic Re-lock duration or when Automatic Re-lock is disabled). When One-Touch Re-lock is **not** in use **(disabled),** any valid PIN code will re-lock the lock.

Previous: While in Menu Mode, pressing this icon cancels the current operation and returns the user to the previous step.

Privacy Mode: Privacy mode is disabled by default. Enable Privacy mode by pressing the privacy button for 4 seconds to put lock in do-not-disturb mode (all pin codes are disabled).

Shutdown Time: The unit will shutdown (flashing RED) for sixty (60) seconds and not allow operation after the wrong code entry limit (5 attempts) has been met.

Tamper Alert: Audible alarm sounds if attempting to forcibly remove outside lock from door.

User PIN Code: The user code operates the lock. The maximum number of user codes with Z-Wave Plus or Zigbee network module is 250; without network module or with iM1 network module, maximum is 25; with Bluetooth, maximum is 12. Note: When deleting user pin code(s), screen will display user pin code being deleted.

Volume Setting Mode: The volume setting for PIN code verification is set to **Low (2)** by default; otherwise it can be set to **High (1)** or **Silent (3)** for quiet areas.

Wrong Code Entry Limit: After five (5) unsuccessful attempts at entering a valid PIN code, the unit will shut down and not allow operation for sixty (60) seconds.

Feature Programming Through Menu Mode Using Master PIN code*

1. Touch screen with back of hand or palm to activate.
2. Enter 4-8 digit master PIN code* followed by key.
   Lock Response: "Menu mode, enter number, press key to continue."
3. Enter digit corresponding to the function to be performed followed by the key. Follow the voice commands.

***The Master PIN code must be registered prior to any other programming of the lock.**
Note: After Master PIN code is entered, lock will automatically hand itself. For best results, lock should be installed on door during this process. If this process was done and lock was not installed on door, review the Re-Handing instructions listed in Hardware Troubleshooting.

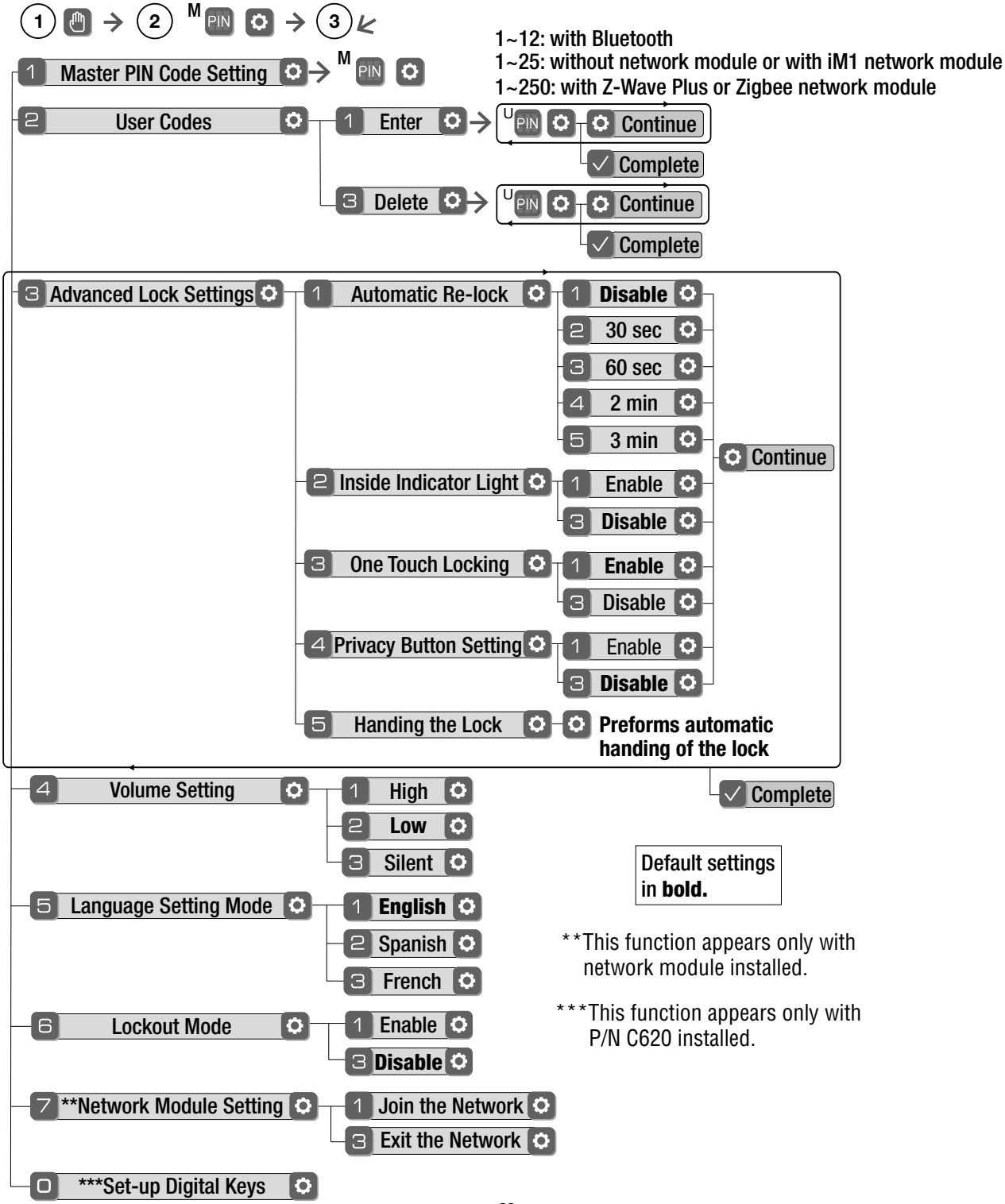

Programming Troubleshooting

Symptom	Suggested Action
Lock does not respond – door is open and accessible.	• Touchscreen becomes active when pressed w/whole hand. Use a larger area of the hand or fingers and verify contact with at least 3 areas. • If touchscreen numbers are visible, check to see if they respond when pressed. • Check batteries are installed and oriented correctly (polarity) in the battery case. • Check batteries are in good condition; replace batteries* if discharged. • Check to see if touchscreen harness is fully connected and not pinched.
Lock does not respond – door is locked and inaccessible.	• Batteries may be completely discharged. • Use mechanical key to gain entry and replace batteries*.
Unit is on for a while then shows no reaction. Lights dim.	• Batteries do not have enough power. Replace batteries*.
Unit chimes to indicate code acceptance, but the door will not open.	• Check the door gaps for any foreign objects between door and frame. • Check that the wire harness is firmly connected to the PCB.
Unit operates to allow access, but will not automatically re-lock.	• Check to see if Auto Re-lock Mode is enabled. • Disable Auto Re-lock Mode to lock the door (automatically). • If low battery indicator is lit (see below), change batteries*.
PIN codes will not register.	• PIN codes must consist of 4 to 8 digits to register. • The same PIN code cannot be used for multiple users. • Registration/management of PIN codes is set by the authority of the Master Code, which is set first. • Contact the Master user. • User codes must be entered within 5 seconds (while touchscreen is active) or process will have to be restarted. • Check ✓ or gear ⚙ cannot be used as part of the PIN code.
Upon entering a PIN code and pressing ✓ key, the unit displays "invalid code" error or lock times out without responding.	• Lockout Mode is enabled. • Only the Master can enable/disable Lockout Mode. • Contact the Master user.
Upon entering a PIN code and pressing the ✓ key, the red padlock icon appears and there are different tones.	• Check to see if the lock is set to Lockout Mode. • Setting/managing Lockout Mode is done through Master Code only. Contact the Master user.
The unit operates, but it makes no sound.	• Check to see if Silent Mode is enabled (see Feature #4).
The unit responds "Low Battery"	• This is the alert to replace the batteries. Replace all four (4) batteries* with new AA Alkaline batteries.
Upon entering a PIN code and pressing the ✓ key, the unit responds "Wrong number of digits".	• The digits entered were incorrect or incomplete. Re-enter the correct code followed by the check ✓ key.

* When batteries are replaced, Network Module locks have a real time clock that will be set through the User Interface (UI); it is recommended to verify correct date and time particularly those locks operating under Daylight Saving Time (DST).

FCC:

Class B Equipment

This equipment has been tested and found to comply with the limits for a Class B digital device, pursuant to Part 15 of the FCC Rules. These limits are designed to provide reasonable protection against harmful interference in a residential installation. This equipment generates, uses, and can radiate radio frequency energy and, if not installed and used in accordance with the instructions, may cause harmful interference to radio communications. However, there is no guarantee that interference will not occur in a particular installation. If this equipment does cause harmful Interference to radio or television reception, which can be determined by turning the equipment off and on, the user is encouraged to try to correct the interference by one or more of the following measures:

- Reorient or relocate the receiving antenna.
- Increase the separation between the equipment and receiver.
- Connect the equipment into an outlet on a circuit different from that to which the receiver is connected.
- Consult the dealer or an experienced radio/TV technician for help.

Warning: Changes or modifications to this device, not expressly approved by **ASSA ABLOY Residential Group** could void the user's authority to operate the equipment.

Industry Canada:

This Class A digital apparatus meets all requirements of the Canadian Interference Causing Equipment Regulations.

Cet appareillage numérique de la classe A répond à toutes les exigences de l'interférence canadienne causant des règlements d'équipement.

Yale Locks & Hardware

Product Support Tel 1-855-213-5841 • www.yalehome.com

Yale® ,Yale Real Living® and Assure Lock® are registered trademarks of ASSA ABLOY Residential Group. Other products' brand names may be trademarks or registered trademarks of their respective owners and are mentioned for reference purposes only. © Copyright 2019. All rights reserved. Reproduction in whole or in part without the express written permission of ASSA ABLOY Residential Group is prohibited.

Yale® Z-Wave Plus™ Smart Module Installation Guide

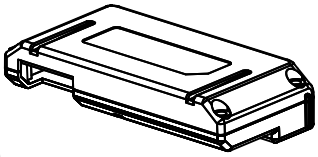

Adding a Yale Z-Wave Plus Smart Module to your Assure Lock & Z-Wave System

1. Install the Yale Smart Module into the slot above the battery compartment
   IMPORTANT: The batteries must be removed before removing the Yale Smart Module:
   - Remove battery cover
   - Remove batteries
   - Insert or remove Yale Smart Module
   - Reinstall batteries
   - Reinstall battery cover

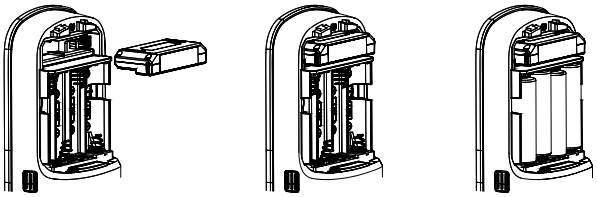

2. Open the Z-Wave system's smart home or alarm app on your smartphone or tablet

3. Follow the in-app instructions for adding a new device

4. On your lock keypad, enter your master entry code followed by the ⚙ icon

5. Press the 7 key followed by the ⚙ icon

6. Press the 1 key followed by the ⚙ icon

Removing a Yale Z-Wave Plus Smart Module from your Assure Lock & Z-Wave System

1. On your lock keypad, enter your master entry code followed by the ⚙ icon

2. Press the 7 key followed by the ⚙ icon

3. Press the 3 key followed by the ⚙ icon

4. Open the Z-Wave system's smart home or alarm app and follow the instructions for removing a device

5. Remove the Yale Smart Module from the slot above the battery compartment
   IMPORTANT: The batteries must be removed before removing the Yale Smart Module:
   - Remove battery cover
   - Remove batteries
   - Insert or remove Yale Smart Module
   - Reinstall batteries
   - Reinstall battery cover

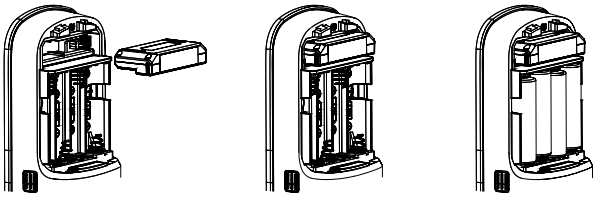

6. If you're adding a new Yale Smart Module, follow the instructions included with it

WARNING: Changes or modifications to this device, not expressly approved by Yale Home could void the user's authority to operate the equipment.

This device is a security enabled Z-Wave Plus product that is able to use encrypted Z-Wave Plus messages to communicate to other security enabled Z-Wave Plus products. This device must be used in conjunction with a Security Enabled Z-Wave Controller in order to fully utilize all implemented functions. This product can be operated in any Z-Wave network with other Z-Wave certified devices from other manufacturers. All non-battery operated nodes within the network will act as repeaters regardless of vendor to increase reliability of the network.

FCC:
Contain FCC ID: U4A-YRHCPZW0FM
Model: YRMZW2-US
This equipment has been tested and found to comply with the limits for a Class B digital device, pursuant to Part 15 of the FCC Rules. These limits are designed to provide reasonable protection against harmful interference in a residential installation. This equipment generates, uses, and can radiate radio frequency energy and, if not installed and used in accordance with the instructions, may cause harmful interference to radio communications. However, there is no guarantee that interference will not occur in a particular installation. If this equipment does cause harmful Interference to radio or television reception, which can be determined by turning the equipment off and on, the user is encouraged to try to correct the interference by one or more of the following measures:

- Reorient or relocate the receiving antenna.
- Increase the separation between the equipment and receiver.
- Connect the equipment into an outlet on a circuit different from that to which the receiver is connected.
- Consult the dealer or an experienced radio/TV technician for help.

THIS DEVICE COMPLIES WITH PART 15 OF THE FCC RULES. OPERATION IS SUBJECT TO THE FOLLOWING TWO CONDITIONS.
(1) THIS DEVICE MAY NOT CAUSE HARMFUL INTERFERENCE, AND (2) THIS DEVICE MUST ACCEPT ANY INTERFERENCE RECEIVED, INCLUDING INTERFERENCE THAT MAY CAUSE UNDESIRED OPERATION.

Industry Canada:
Contain IC: 6982A-YRHCPZW0FM
Model: YRMZW2-US
Section 7.1.2 of RSS-GEN Under Industry Canada regulations, this radio transmitter may only operate using an antenna of a type and maximum (or lesser) gain approved for the transmitter by Industry Canada. To reduce potential radio interference to other users, the antenna type and its gain should be so chosen that the equivalent isotropically radiated power (e.i.r.p.) is not more than that necessary for successful communication.
En vertu des règlements d'Industrie Canada, cet émetteur radio ne peut fonctionner avec une antenne d'un type et un maximum (ou moins) approuvés pour gagner de l'émetteur par Industrie Canada. Pour réduire le risque d'interférence aux autres utilisateurs, le type d'antenne et son gain doivent être choisies de façon que la puissance isotrope rayonnée équivalente (PIRE) ne dépasse pas ce qui est nécessaire pour une communication réussie.

Section 7.1.3 of RSS-GEN This Device complies with Industry Canada License-exempt RSS standard(s). Operation is subject to the following two conditions: 1) this device may not cause interference, and 2) this device must accept any interference, including interference that may cause undesired operation of the device.
Cet appareil est conforme avec Industrie Canada RSS standard exemptes de licence(s). Son fonctionnement est soumis aux deux conditions suivantes: 1) ce dispositif ne peut causer des interférences, et 2) cet appareil doit accepter toute interférence, y compris les interférences qui peuvent causer un mauvais fonctionnement du dispositif.

This radio transmitter 6982A-YRHCPZW0FM has been approved by Industry Canada to operate with the antenna types listed below with the maximum permissible gain indicated. Antenna types not included in this list, having a gain greater than the maximum gain indicated for that type, are strictly prohibited for use with this device.

Le présent émetteur radio 6982A-YRHCPZW0FM a été approuvé par Industrie Canada pour fonctionner avec les types d'antenne énumérés ci-dessous et ayant un gain admissible maximal. Les types d'antenne non inclus dans cette liste, et dont le gain est supérieur au gain maximal indiqué, sont strictement interdits pour l'exploitation de l'émetteur.

CAN ICES-3B/NMB-3B

Yale Home

24/7 Tech Support : 1-855-492-0505 • www.US.YaleHome.com

Yale® is a registered trademark of Yale Home. Other products' brand names may be trademarks or registered trademarks of their respective owners and are mentioned for reference purposes only. © Copyright 2020. All rights reserved. Reproduction in whole or in part without the express written permission of Yale Home is prohibited.

ASSA ABLOY

The global leader in door opening solutions

Yale Locks

Z-Wave Plus™ v2 System Integrators Guide for Marketing

Yale Assure Electronic Deadbolts

YRD216-ZW3, YRD226-ZW3, YRD256-ZW3
YRC216-ZW3, YRC226-ZW3, YRC256-ZW3

Document Revision: 1.4

October 20, 2020

Contents

Yale Z-Wave Plus Product Info 3
Supported Command Classes 3
Association Table: 4
Notifications Table 4
Configurable Parameters 9

Yale Z-Wave **Plus** Product Info

- Manufacturer ID: Assa Abloy (0x0129)
- Z-Wave Device Type: Door Lock Keypad
- Z-Wave Role Type: Listening Sleeping Slave (LSS)
- Product ID:
  - 0x46D1 for YRD216-ZW3 (Push Button Deadbolt)
  - 0x46D2 for YRD226-ZW3 (Keyed Touch Screen Deadbolt)
  - 0x46D5 for YRD256-ZW3 (Keyless Touch Screen Deadbolt)
  - 0x46C1 for YRC216-ZW3 (Interconnected Push Button Deadbolt)
  - 0x46C2 for YRC226-ZW3 (Interconnected Keyed Touch Screen Deadbolt)
  - 0x46C5 for YRC256-ZW3 (Interconnected Keyless Touch Screen Deadbolt)
- Product Type ID:
  - 0x8004 for YRD216-ZW3 & YRC216-ZW3 (Push Button Deadbolt)
  - 0x8002 for YRD226-ZW3, YRC226-ZW3, YRD256-ZW3, & YRC256-ZW3 (Touch Screen Deadbolt)

Supported Command Classes

- Command Class Z-Wave Plus Info
- Command Class Manufacturer Specific*
- Command Class Security
- Command Class Security 2
- Command Class Device Reset Locally*
- Command Class Power Level*
- Command Class Version*
- Command Class Battery*
- Command Class Door Lock*
- Command Class Door Lock Logging*
- Command Class Schedule Entry Lock*
- Command Class User Code*
- Command Class Time Parameters*
- Command Class Time*
- Command Class Firmware Update Meta Data*
- Command Class Association*
- Command Class Multi Channel Association*
- Command Class Association Group Info*
- Command Class Notification*
- Command Class Configuration*
- Command Class Application Status
- Command Class Transport Service

- Command Class Supervision
- Command Class Indicator*
- Command Class Basic*

* Command Class Requires Security

Association Table:

Table 1 - Association Table

Group ID	Maximum Nodes	Description	Commands
1	1	Lifeline	• Command_Class_Battery, V1 o Battery_Report • Command_Class_Configuration, V4 o Configuration_Report • Command_Class_Notification, V8 o Notification_Report • Command_Class_Door_Lock, V4 o Door_Lock_Operation_Report o Door_Lock_Configuration_Report • Command_Class_Device_Reset_Locally, V1 o Device_Reset_Locally_Notification • Command_Class_Indicator, V3 o Indicator_Report • Command_Class_User_Code, V2 o User Code Report • Command_Class_Clock, V1 o Clock_Report

Notifications Table

Table 2 - Notifications Table

Alarm Reports	Alarm type	Alarm Level	Description	Notification Type	Event
Deadbolt Jammed	0x09	0x01	Deadbolt jammed while locking	0x06	0x0B
		0x02	Deadbolt jammed while unlocking	0x06	0x0B

Keypad Lock	0x12	0x (01 - max users)	Where Alarm level represents user slot number	0x06	0x05
Keypad Unlock	0x13	0x(01-max users)	Where Alarm level represents user slot number (0x00 = Master Code)	0x06	0X06
Manual Lock	0x15	0x01	by key cylinder or inside thumb-turn	0x06	0x01
		0x02	by touch function (lock and leave)	0x06	0x01
		0x03	By inside button	0x06	0x01
Manual Unlock	0x16	0x01	By key cylinder or inside thumb turn	0x06	0x02
RF Operate Lock	0x18	0x01	by RF module	0x06	0x03
RF Operate Unlock	0x19	0x01	by RF module	0x06	0X04
Auto Lock Operate Locked	0x1B	0x01	Auto re-lock cycle complete, locked.	0x06	0x09
User deleted	0x21	0x(01-max users)	User was deleted. Alarm level = user slot number	0x06	0X0D (single) 0X0C (all)
Door State	0x23	0x00	Door is open	0x06	0x16
		0x01	Door is closed	0x06	0x17
Non Access	0x26	0x(01-max users)	A Non Access Code was entered at the lock. Where alarm level represents	0x06	0xFE

			user slot number		
Daily Repeating Schedule Set/Erased	0x60	0x(01-max users)	Schedule(s) has been set/erased for specified user ID	0x06	0xFE
Year Day Schedule Set/Erased	0x62	0x(01-max users)	Schedule(s) has been set/erased for specified user ID	0x06	0xFE
All Schedule Types Enabled/Disabled	0x65	0x(01-max users)	Schedule(s) has been enable/disabled for specified user ID	0x06	0xFE
Master Code changed	0x70	0x00	Master code was changed at keypad	0x06	0x12
		0xFB	Master code was changed over RF	0x06	0x0E
User added		0x(01-max users)	User added. Alarm level = user slot number	0x06	0X0E
Duplicate Pin-code error	0x71	0x (01-max users)	Where Alarm level represents user slot number Alarm generated in response to add user RF cmd. This alarm is not generated when attempting to add duplicate pin at the keypad. The lock simply denies it and plays the “Denied”. Trying to duplicate the master code will result in a 0x71	0x06	0x0F

			0x00 alarm report.		
Disabled user entered at keypad	0x83	0x(01-max users)	A disabled user pin code was entered at the keypad	0x06	0xFE
Valid user but outside of schedule	0x84	0x(01-max users)	A valid user can be both a normal user and a Non-Access user. If a non-access user is out of schedule this alarm will be sent instead of the non-access alarm.	0x06	0xFE
Tamper Alarm	0xA1	0x01	keypad attempts exceed code entry limit	0x06	0X10
		0x02	front escutcheon removed from main	0x06	0xFE
Battery is fully charged	0x80	0x05	After a low battery alert was observed, the lock was powered down and powered back up with full battery.	0x08	0x0D
Door Lock needs Time set	0x82	0x00	Power to the lock was restored and the locks RTC was cleared. The controller should set the time to ensure proper logging.	0x08	0x01
Low Battery Alarms***	0xA7	0x(Current %)	Low Battery (Starting at 4.0V)	0x08	0x0A
	0xA8	0x(Current %)	Critical Battery Level (Starting at 3.9V)	0x08	0x0B

** The Yale lock also supports a 3rd low battery alarm: too low to operate. This alarm is sent out as a Battery Report (with value = 0xFF) through the Battery Command Class. This is the last low battery alarm level before the product stops functioning.

Configurable Parameters

Table 3 - Configurable Parameters

Param. Num.	Name	Format	Length	Configuration Properties			Info	Info String
				Min	Max	Default		
1	Volume	Signed Integer	1 byte	0x01 (High Volume)	0x03 (Silent)	0x02 (Low Volume)	Set Volume Level to high (1), low (2), or silent (3).	53
2	Auto Relock	Unsigned Integer	1 byte	0x00 (Disable)	0xFF (Enable)	0x00 (Disable)	Set Auto Relock feature to enable or disable.	45
3	Relock time	Signed Integer	1 byte	0x0A (10 seconds)	0xB4 (180 seconds)	0x1E (30 seconds)	Adjust the time your lock will auto relock.	43
4	Wrong Code Entry Limit	Signed Integer	1 byte	0x03	0x0A	0x05	Adjust the limit for wrong code entries allowed by your lock.	61
5	Language	Signed Integer	1 byte	0x01 (English)	0x03 (French)	0x01 (English)	Set the language to English (1), Spanish (2), or French (3).	60
7	Shut down time	Signed Integer	1 byte	0x0A (10 seconds)	0x84 (132 seconds)	0x3C (60 seconds)	Adjust the time your lock is shutdown after reaching its	80

							wrong code entry limit.	
8	Operating mode	Signed Integer	1 byte	0x00 (Normal Mode)	0x02 (Privacy Mode)	0x00 (Normal Mode)	Set the Operating Mode to normal mode(0), vacation mode(1) or privacy mode(2).	75
11	One Touch Locking	Unsigned Integer	1 byte	0x00 (Disable)	0xFF (Enable)	0xFF (Enable)	Set One Touch Locking feature to enable or disable.	51
12	Privacy Button	Unsigned Integer	1 byte	0x00 (Disable)	0xFF (Enable)	0x00 (Disable)	Set Privacy Button feature to enable or disable.	48
13	Lock Status LED	Unsigned Integer	1 byte	0x00 (Disable)	0xFF (Enable)	0x00 (Disable)	Set Lock Status LED feature to enable or disable.	57
15	Reset To Factory Defaults	Unsigned Integer	1 byte	0x01	0x01	N/A	Lock will reset to factory defaults when set this parameter to 0x01.	57