USER MANUAL

ON/OFF TOGGLE SWITCH 700

ZEN73 VER. 1.0

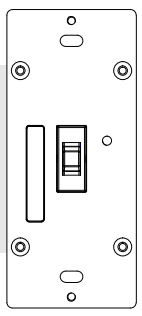

zooz™ bright ideas

www.getzooz.com

ask@getzooz.com

FIRMWARE VERSION 10.0

FEATURES

- Manual or Z-Wave on/off control with instant status updates
- **NEW: 700 series Z-Wave** chip for better range and faster control
- **Simple Direct 3-Way:** connect with existing on/off switches in 3-way, 4-way, and 5-way set-ups, no add-on needed
- **Scene control**: trigger actions with multi-tap (select hubs only)
- **Smart bulb mode:** disable relay and control the light via Z-Wave
- Remembers and restores on/off status after power failure
- **NEW:** discreet LED indicator for easy set-up and troubleshooting
- Works with LED and incandescent bulbs (don't use with tubes)

SPECIFICATIONS

- Model Number: ZEN73 VER. 1.0
- Z-Wave Signal Frequency: 908.42 MHz
- Power: 120 VAC, 60 Hz
- **Maximum Load:** 8 A, 150 W LED/CFL, 600 W incandescent, 960 W resistive (DON'T use with tube lights, fans, or receptacles)
- Range: Up to 500 feet line of sight
- Operating Temperature: 32-104° F (0-40° C)
- Installation and Use: Indoor only

⚠ CAUTION

This is an electrical device - please use caution when installing and operating the on/off switch. Remote control of appliances may result in unintentional or automated activation of power.
Do not use this Z-Wave device to control electric heaters or other appliances which produce the risk of fire, burns, or electrical shock when unattended.
To reduce risk of overheating and possible damage to other equipment, do not install this unit to control a receptacle; a motor-operated appliance; a fluorescent lighting fixture; or a transformer-supplied fixture.

BEFORE YOU INSTALL

This switch is intended for installation in accordance with the National Electric Code and local regulations. It is recommended that a licensed electrician perform this installation.

WIRING: READ IT!

1. CHECK THE LOAD: lights only (150W for LED's, 600W for incande-scent), DON'T CONNECT THIS SWITCH TO OUTLETS, FANS, OR TUBE LIGHTS.
2. POWER OFF: turn the circuit power off in the breaker panel before you start. If installing in a multi-switch box with multiple circuits, turn power off at all of the circuits.
3. CHECK THE WIRES: mark load (most often black), line (most often black), neutral (most often white), and ground (most often bare). 14 AWG wires only! **Don't rely exclusively on your multimeter to identify the wires!**

NOT SURE WHAT YOU'RE SEEING? WE'LL HELP! **SUPPORT.GETZOOZ.COM**
SEND US PICTURES OF YOUR SET-UP, BEFORE YOU DISCONNECT WIRES.

4. REMOVE THE OLD SWITCH: disconnect the wires and label them with the included label stickers.
5. CONNECT THE Z-WAVE SWITCH: follow all installation steps carefully. Wire the switch EXACTLY like in the diagram.

ZEN73 WIRING DIAGRAM FOR SINGLE POLE INSTALLATION

❶ Insert the ground (bare) wire into the **Ground** terminal (not shown in the diagram)

❷ Insert the power source wire to **Line** terminal and load wire to **Load** terminal. **Load and line CAN'T be swapped so make sure you identified them correctly!**

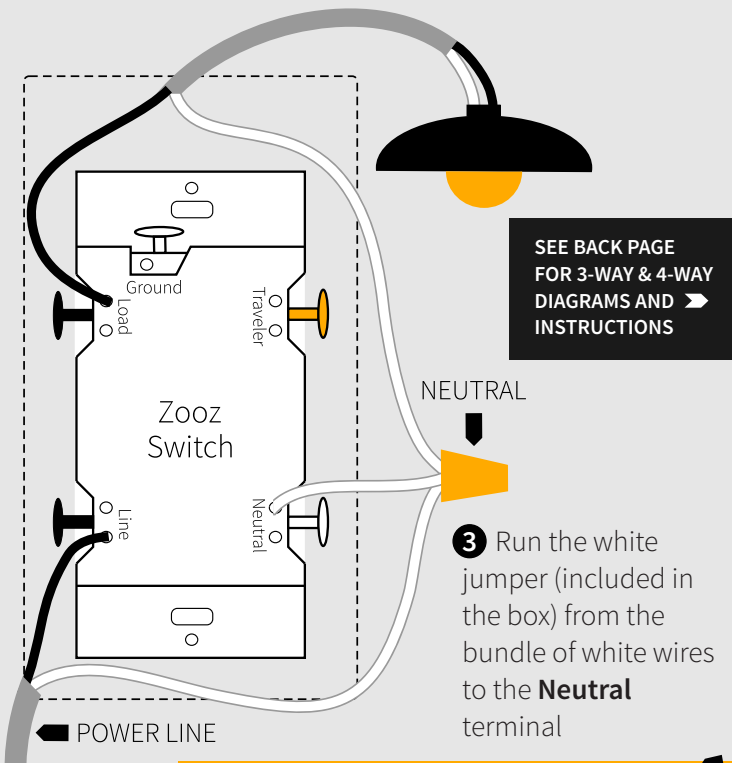

SEE BACK PAGE FOR 3-WAY & 4-WAY DIAGRAMS AND INSTRUCTIONS

❸ Run the white jumper (included in the box) from the bundle of white wires to the **Neutral** terminal

DON'T FORCE THE SCREWS. Look up to see how to install the wires correctly.

HOW TO INSTALL THE WIRES

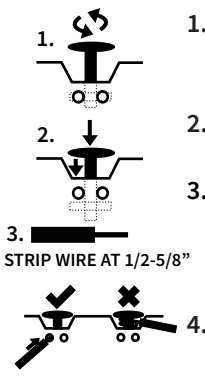

1. **UNSCREW:** carefully turn the screw counter clockwise to make space for the wire. DO NOT unscrew completely.
2. **PRESS DOWN:** once it's loose, press the screw down with your finger so it catches the thread.
3. **INSERT WIRE:** make sure the wire is perfectly straight, then insert it into the terminal while holding the screw down. DO NOT wrap wires around the terminal screws!
4. **TIGHTEN:** turn the screw clockwise to tighten the wire. DO NOT OVERTIGHTEN!

COMPLETE INSTALLATION

Secure your Z-Wave switch in the box with mounting screws, handling the wires with care. Always use the supplied short screws! Install the wall plate and restore power to the circuit.

TEST THE SWITCH

The LED indicator will **not** light up when you turn the power back on, that's normal. Toggle the switch up for ON and toggle it down for OFF. **If the test fails, please check that:**

- power is fully restored to the circuit
- wiring matches the instructions **exactly**
- the load isn't too large and overheating the switch causing it to shut off

⚠ WARNING

- This product should be installed indoors upon completion of any building renovations.
- Prior to installation, the device should be stored in a dry, dust-and-mold-proof place.
- Do not install the switch in a place with direct sun exposure, high temperature, or humidity.
- Keep away from chemicals, water, and dust.
- Ensure the device is never close to any heat source or open flame to prevent fire.
- Ensure the device is connected to an electric power source that does not exceed the maximum load power.
- No part of the device may be replaced or repaired by the user.

Z-WAVE CONTROL

1. ADD DEVICE to your hub

Initiate inclusion (pairing) in the app (or browser). Not sure how? Scan one of the QR codes below for step-by-step instructions or get in touch: www.support.getzooz.com

2. Finalize inclusion at the switch.
TOGGLE UP 3 TIMES QUICKLY
if using traditional Z-Wave inclusion.

SCAN THE QR CODE / ENTER THE 5-DIGIT PIN
if using the new SmartStart method.

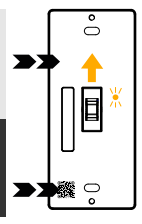

SmartStart enabled devices can be added into a Z-Wave network by scanning the QR code on the product.
The LED indicator will blink blue to signal communication and turn green for 3 seconds if inclusion is successful or turn red for 3 seconds if the pairing attempt fails.

Choose your hub and scan the QR code with your phone's camera. Then click on the link to access the step-by-step pairing instructions.

SmartThings | Hubitat | Wink | Vera

Get more tutorials and helpful tips at ww.support.getzooz.com

TROUBLESHOOTING

The switch won't add to your system? Try this:

1. Initiate **EXCLUSION** and toggle the switch down 3 times quickly.
2. Toggle the switch up **4-5 times quickly** when adding it.
3. Bring the gateway controller (hub) **closer** to the switch, it may be out of range.
4. Get troubleshooting tips for your hub at **www.support.getzooz.com**

The switch won't control the lights manually anymore? Try this:

1. Turn the power off at the breaker and check if a wire didn't get loose.
2. Exclude the switch from the hub or **reset** it in case manual control was accidentally disabled.
3. The load may be incompatible so try it with a single incandescent bulb.

EXCLUSION (REMOVING / UNPAIRING DEVICE)

1. Bring your Z-Wave gateway (hub) close to the switch if possible
2. Put the Z-Wave hub into **exclusion mode** (not sure how to do that? ask@getzooz.com)
3. Toggle the switch **down 3 times quickly** (the LED indicator will start blinking blue)
4. Your hub will confirm exclusion, the LED indicator on the switch will turn green for 3 seconds, and the device will disappear from your controller's device list

FACTORY RESET

If your primary controller is missing or inoperable, you may need to reset the device to factory settings. To reset the switch, **hold the toggle DOWN for 10 seconds** until the LED indicator starts blinking. Release the toggle, and immediately after, **toggle the switch DOWN 5 times** to complete the reset. The LED indicator will flash blue 3 times and turn red for 3 seconds to confirm successful reset.
NOTE: All previously recorded activity and custom settings will be erased from the device's memory.

ADVANCED SETTINGS

Please refer to your controller's user guide for advanced programming instructions as they are a little different for every software.
Not sure where to start? Go to www.support.getzooz.com for detailed instructions on how to change the settings on SmartThings, Vera, and more.
Or just email us: ask@getzooz.com

CUSTOMIZE YOUR SWITCH

Here is a selection of settings available to customize your switch. **Scan the QR code for a full list of parameters** and look below for how to access them on your hub.

- **Built-in timer** for auto on and auto off
- On/off **toggle orientation**
- **Smart Bulb Mode** (disable the relay): HOLD DOWN for 10 seconds then 5 x TAP UP
- On/off status after **power failure**

SCAN SETTINGS

Choose your hub and scan the QR code with your phone's camera. Then click on the link to learn how to access and change the advanced settings for the switch on your hub.

SmartThings | Hubitat | Home Assistant | Vera

SCENE CONTROL

You can trigger scenes or control other connected devices in your network using this switch. Just enable the setting in Parameter 10 and verify that your hub supports scene control. Assign scenes or actions to 1-tap, 2-tap, 3-tap, 4-tap, and 5-tap as well as to held and released for toggle up and toggle down.

Scan the QR code for scene control programming instructions on your hub.

QUESTIONS?

ask@getzooz.com

ASSOCIATION

This on/off switch supports Group 1 with up to 1 devices for lifeline communication and Group 2 with up to 5 devices. This device will send BASIC REPORT to Group 1 and BASIC SET command to group 2 when operated manually.
You can set direct association to have the switch control another Z-Wave device independently of the hub by using Group 2. Not every hub exposes direct association settings in the interface so please go to www.support.getzooz.com to see if your system allows for direct association.

This product can be included and operated in any Z-Wave network with other Z-Wave certified devices from other manufacturers and/or other applications. All non-battery operated nodes within the network will act as repeaters regardless of vendor to increase reliability of the network.
This product features the latest Security 2 (S2) framework to remove smart home network hacking risks. This device is equipped with a unique authentication code for trusted wireless communication. Find the full DSK key for the device on the QR sticker located on the green inner box the product came in.

This is an ETL certified device. ETL, just like UL, is a Nationally Recognized Testing Laboratory. The ETL mark is proof of product compliance with North American safety standards.

WARRANTY

This product is covered under a 12-month limited warranty. To read the full warranty policy or file a warranty claim, please go to www.getzooz.com/warranty

IN NO EVENT SHALL ZOOZ OR ITS SUBSIDIARIES AND AFFILIATES BE LIABLE FOR ANY INDIRECT, INCIDENTAL, PUNITIVE, SPECIAL, OR CONSEQUENTIAL DAMAGES, OR DAMAGES FOR LOSS OF PROFITS, REVENUE, OR USE INCURRED BY CUSTOMER OR ANY THIRD PARTY, WHETHER IN AN ACTION IN CONTRACT, OR OTHERWISE EVEN IF ADVISED OF THE POSSIBILITY OF SUCH DA-MAGES. ZOOZ'S LIABILITY AND CUSTOMER'S EXCLUSIVE REMEDY FOR ANY CAUSE OF ACTION ARISING IN CON-NECTION WITH THIS AGREEMENT OR THE SALE OR USE OF THE PRODUCTS, WHETHER BASED ON NEGLIGENCE, STRICT LIABILITY, BREACH OF WARRANTY, BREACH OF AGREEMENT, OR EQUITABLE PRINCIPLES, IS EXPRESSLY LIMITED TO, AT ZOOZ'S OPTION, REPLACEMENT OF, OR REPAYMENT OF THE PURCHASE PRICE FOR THAT PORTION OF PRODUCTS WITH RESPECT TO WHICH DA-MAGES ARE CLAIMED. ALL CLAIMS OF ANY KIND ARISING IN CONNECTION WITH THIS AGREEMENT OR THE SALE OR USE OF PRODUCTS SHALL BE DEEMED WAIVED UNLESS MADE IN WRITING WITHIN THIRTY (30) DAYS FROM ZOOZ'S DELIVERY, OR THE DATE FIXED FOR DELI-VERY IN THE EVENT OF NONDELIVERY.

FCC NOTE
THE MANUFACTURER IS NOT RESPONSIBLE FOR ANY RADIO OR TV INTERFERENCE CAUSED BY UNAUTHORIZED MODIFICATIONS TO THIS EQUIPMENT. SUCH MODIFICATIONS COULD VOID THE USER'S AUTHORITY TO OPERATE THE EQUIPMENT. STORE INDOORS WHEN NOT IN USE. SUITABLE FOR DRY LOCATIONS ONLY. DO NOT IMMERSE IN WATER. NOT FOR USE WHERE DIRECTLY EXPOSED TO WATER.
This device complies with Part 15 of the FCC Rules.
Operation is subject to the following conditions:
1. This device may not cause harmful interference,
2. This device must accept any interference received, including interference that may cause undesired operation.
This equipment has been tested and found to comply with the limits for a Class B digital device, pursuant to part 15 of the FCC Rules.
These limits are designed to provide reasonable protection against harmful interference in a residential installation.
This equipment generates, uses and can radiate radio frequency energy and, if not installed and used according to instructions, may cause harmful interference to radio communications.
However, there is no guarantee that interference will not occur in any given installation.
If this equipment causes harmful interference to radio or television reception, the user may try to correct the interference by taking one or more of the following measures:
- Reorient or relocate receiving antenna
- Increase the separation between equipment and receiver
- Connect equipment into a separate outlet or circuit from receiver
- Consult the dealer or an experienced radio/TV technician for additional assistance

All brand names displayed are trademarks of their respective holders.
© Zooz 2021

ZEN73 WIRING DIAGRAMS FOR THE MOST COMMON 3-WAY INSTALLATIONS

For more diagrams or to request custom instructions go to **support.getzooz.com**

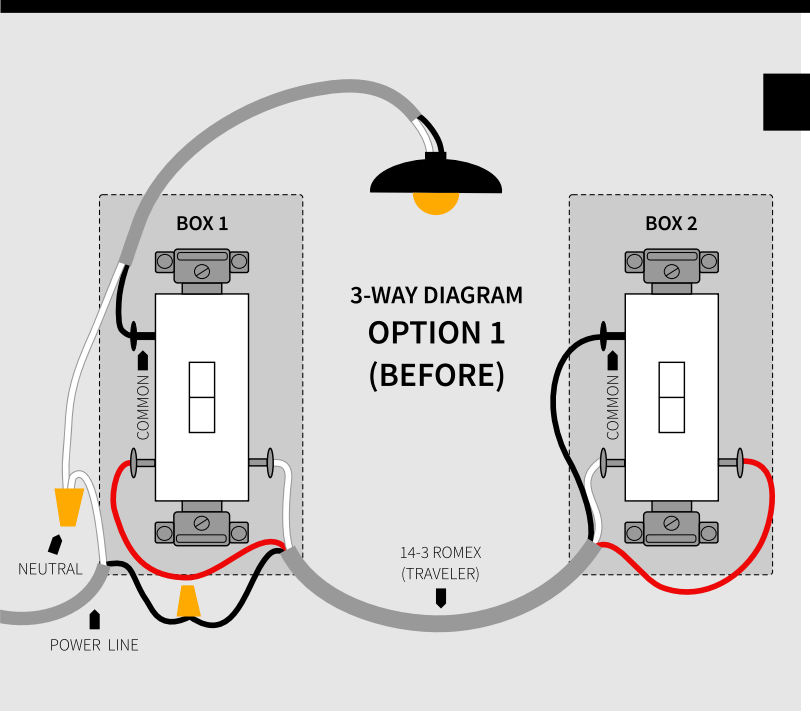

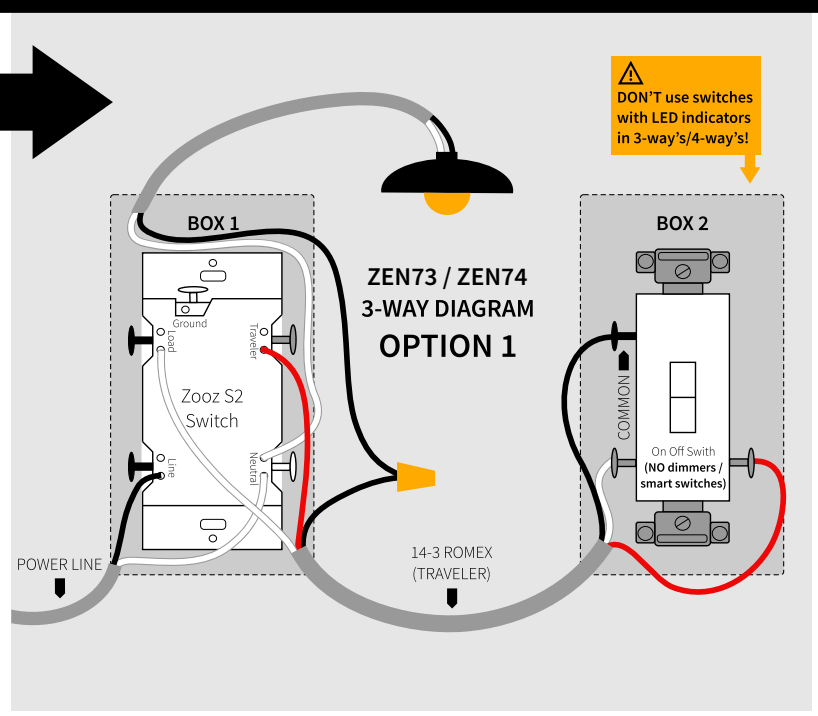

STOP!

Wire and screw position, as well as color codes are for illustration only. You should not follow the colors and positioning in the illustration blindly. Always identify all wires prior to installing Zooz switches and make sure you can match the diagrams to your set-up exactly. Don't experiment or attempt a "trial-and-error" installation for your own safety.

NOTE!

If you are not comfortable identifying the wiring and completing the installation, please consult a licensed electrician.
Make sure you have identified all wiring correctly before connecting the switch. If your wiring doesn't match any of the below diagrams, contact our support: ask@getzooz.com

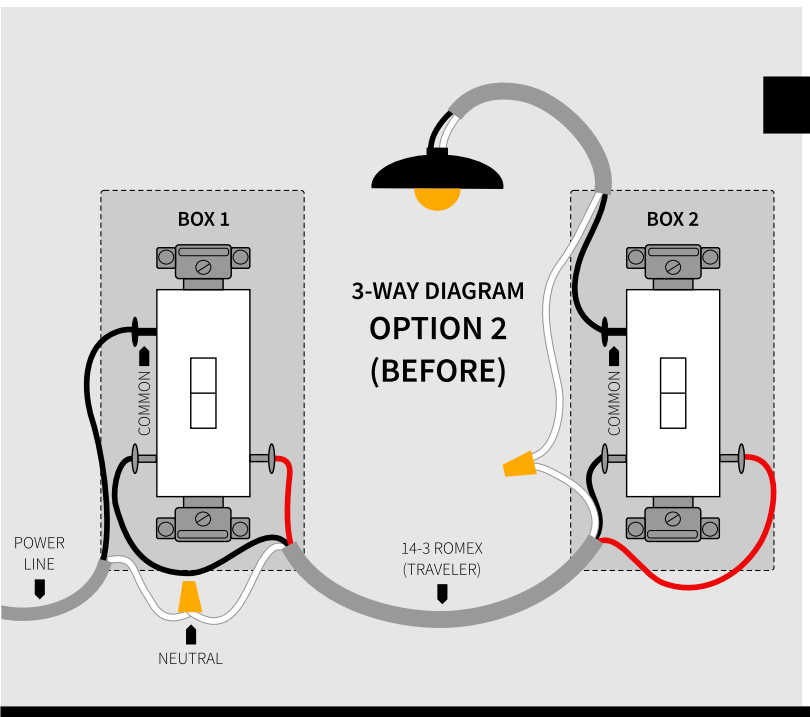

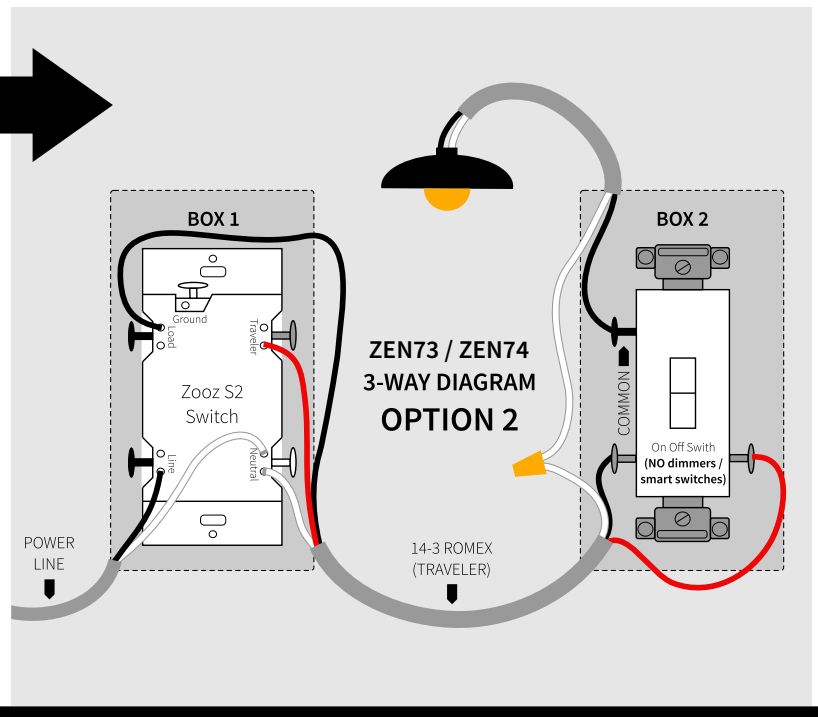

⚠ ON/OFF SWITCHES ONLY

Do not connect Zooz Z-Wave switches to an existing 3-way dimmer, illuminated switch, or an electronic add-on switch. Zooz switches can only be wired with mechanical on/off switches in a 3-way or 4-way setting!
To simplify the diagrams, we did not include connections for the ground wire. Remember that all Zooz switches need to be wired according to the electrical code, with ground wire connected to the ground terminal.

Always install your Zooz S2 switch in the box with direct connection to power line. Diagrams and instructions in this manual are for ZEN73 and ZEN74 models ONLY!

ZEN73 WIRING DIAGRAM FOR THE MOST COMMON 4-WAY INSTALLATION

For more diagrams or to request custom instructions go to **support.getzooz.com**

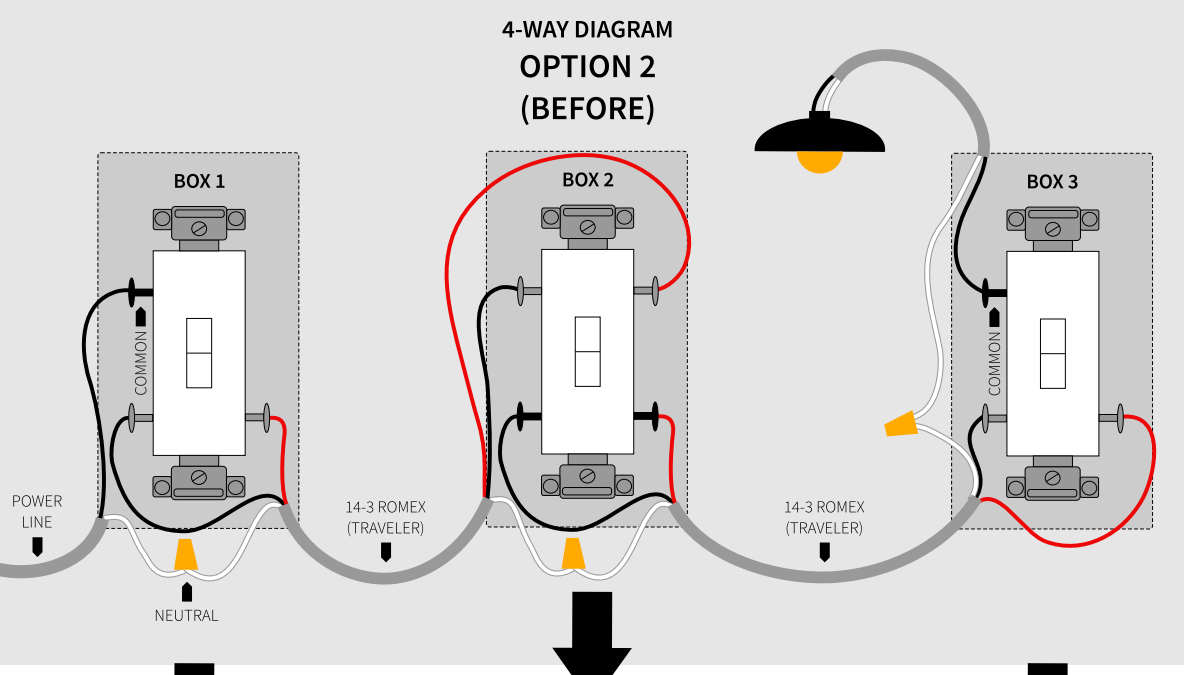

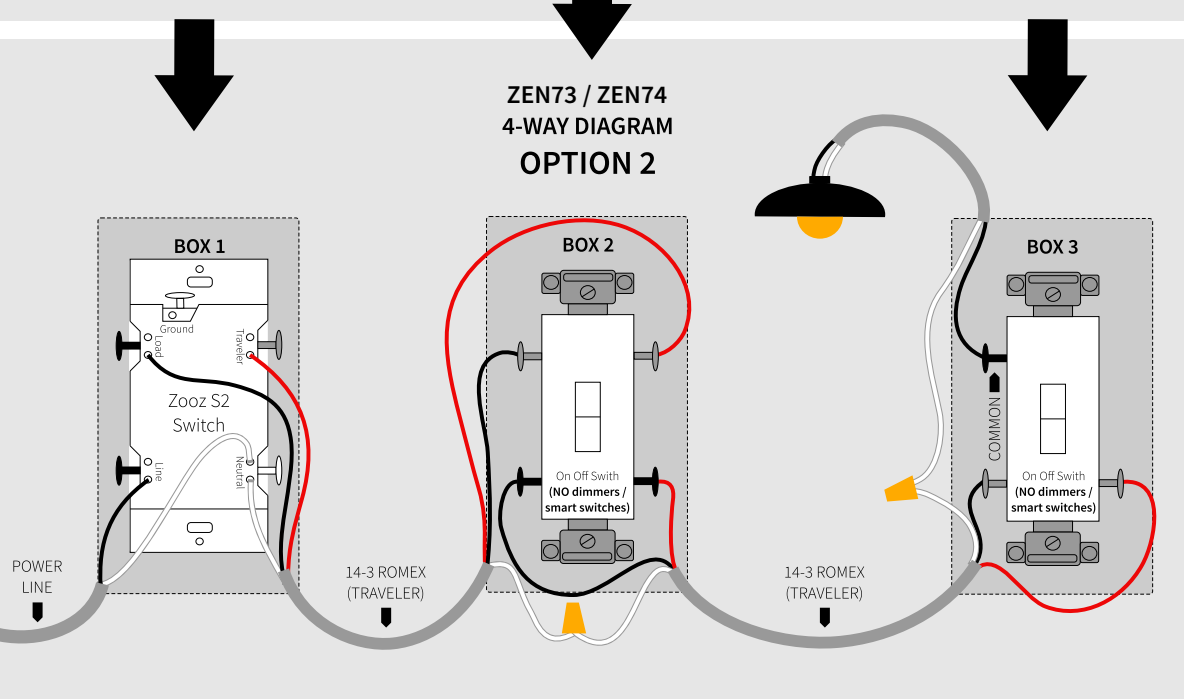

NEED HELP?

If you're having trouble reading the diagrams or don't see your wiring set-up here, get in touch! We have **more 3-way, 4-way, and 5-way diagrams** and instructions. There are many ways to wire multi-point control set-ups so unless you can match your wiring to the diagrams here, please don't attempt the installation for your own safety.

www.support.getzooz.com
ask@getzooz.com

RANGE TEST TOOL

You can now easily check if the switch is within your Z-Wave hub's range:
Press and hold the **toggle down** for **10 seconds** until the LED indicator starts blinking. **Release the toggle and within 2 seconds, toggle it down again 2 times quickly.** The LED indicator will then report signal strength.
Solid green = direct communication with the primary controller is stable
Flashing green = direct communication with the primary controller is established but signal is weak
Solid blue = stable communication with hub via repeaters
Flashing blue = communication with the primary controller is established via repeaters but signal is weak
Solid red = communication with the primary controller has failed
Tap the **lower paddle** to **exit** testing mode.

NOTE: This function may only be activated once the switch has been included to a Z-Wave network.

MORE COLOR?

Zooz rocker (decora) style switches now come with replaceable paddles in different colors!
Please get in touch with our support to check which colors are currently available and how to order replacement paddles for the ZEN71, ZEN72, ZEN76, and ZEN77 models.
Zooz switches will match the shade of standard Leviton switches and wall plates available at any major retailer.

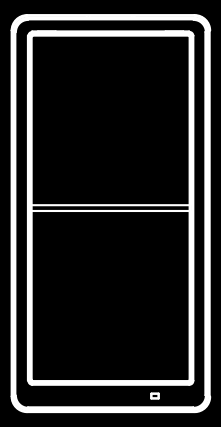

The Simple Direct 3-Way/4-Way implemented in this device is a unique Z-Wave multi-point control solution covered under U.S. Patent 10,219,353 B1.