Yale® Z-Wave Plus™ Smart Module Installation Guide

Please use this procedure only when network primary controller is missing or otherwise inoperable.

Adding a Yale Z-Wave Plus™ v2 Smart Module to your Assure Lock & Z-Wave™ System

1. Install Yale Smart Module into slot above battery compartment
   IMPORTANT: Batteries must be removed before inserting Yale Smart Module:
   - Remove battery cover
   - Remove batteries
   - Insert Yale Smart Module
   - Reinstall batteries
   - Reinstall battery cover

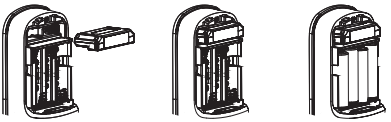

2. Open Z-Wave™ system's smart home or alarm app on your smartphone or tablet
3. If you have SmartStart* enabled with your Z-Wave™ System follow in-app prompts to add a new device If you don't have SmartStart or are not sure, follow steps 4 - 6
4. On your lock keypad, enter your master entry code followed by the ⚙ icon
5. Press the 7 key followed by the ⚙ icon
6. Press the 1 key followed by the ⚙ icon

If prompted, scan QR code

Removing a Yale Z-Wave Plus™ v2 Smart Module from your Assure Lock & Z-Wave™ System

1. Open Z-Wave™ system's smart home or alarm app and follow instructions for removing a device
2. On your lock keypad, enter your master entry code followed by the ⚙ icon
3. Press the 7 key followed by the ⚙ icon
4. Press the 3 key followed by the ⚙ icon
5. Remove Yale Smart Module from slot above battery compartment
   IMPORTANT: Batteries must be removed before removing Yale Smart Module:
   - Remove battery cover
   - Remove batteries
   - Remove Yale Smart Module
   - Reinstall batteries
   - Reinstall battery cover

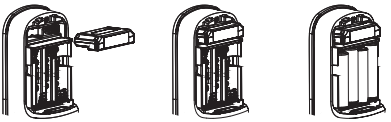

6. If you're adding a new Yale Smart Module, follow instructions included with it

*SmartStart enabled products can be added into a Z-Wave network by scanning the Z-Wave QR Code present on the product with a controller providing SmartStart inclusion. No further action is required and the SmartStart product will be added automatically within 10 minutes of being switched on in network vicinity.

P/N AYR-MOD-ZW3-MNL-0015 Rev A

Warning: Changes or modifications to this device, not expressly approved by ASSA ABLOY Residential Group could void the user's authority to operate the equipment.

This device is a security enabled Z-Wave Plus™ v2 product that is able to use encrypted Z-Wave Plus™ v2 messages to communicate to other security enabled Z-Wave Plus™ v2 products. This device must be used in conjunction with a Security Enabled Z-Wave™ Controller in order to fully utilize all implemented functions. This product can be operated in any Z-Wave™ network with other Z-Wave™ certified devices from other manufacturers. All non-battery operated nodes within the network will act as repeaters regardless of vendor to increase reliability of the network.

FCC:

Class B Equipment

This equipment has been tested and found to comply with the limits for a Class B digital device, pursuant to Part 15 of the FCC Rules. These limits are designed to provide reasonable protection against harmful interference in a residential installation. This equipment generates, uses, and can radiate radio frequency energy and, if not installed and used in accordance with the instructions, may cause harmful interference to radio communications. However, there is no guarantee that interference will not occur in a particular installation. If this equipment does cause harmful Interference to radio or television reception, which can be determined by turning the equipment off and on, the user is encouraged to try to correct the interference by one or more of the following measures:

- Reorient or relocate the receiving antenna.
- Increase the separation between the equipment and receiver.
- Connect the equipment into an outlet on a circuit different from that to which the receiver is connected.
- Consult the dealer or an experienced radio/TV technician for help.

THIS DEVICE COMPLIES WITH PART 15 OF THE FCC RULES. OPERATION IS SUBJECT TO THE FOLLOWING TWO CONDITIONS. (1) THIS DEVICE MAY NOT CAUSE HARMFUL INTERFERENCE, AND (2) THIS DEVICE MUST ACCEPT ANY INTERFERENCE RECEIVED, INCLUDING INTERFERENCE THAT MAY CAUSE UNDESIRED OPERATION.

This equipment complies with FCC radiation exposure limits set forth for an uncontrolled environment. This equipment should be installed and operated with minimum distance 20cm between the radiator & your body.

Industry Canada:

Section 7.1.2 of RSS-GEN Under Industry Canada regulations, this radio transmitter may only operate using an antenna of a type and maximum (or lesser) gain approved for the transmitter by Industry Canada. To reduce potential radio interference to other users, the antenna type and its gain should be so chosen that the equivalent isotropically radiated power (e.i.r.p.) is not more than that necessary for successful communication.

En vertu des règlements d'Industrie Canada, cet émetteur radio ne peut fonctionner avec une antenne d'un type et un maximum (ou moins) approuvés pour gagner de l'émetteur par Industrie Canada. Pour réduire le risque d'interférence aux autres utilisateurs, le type d'antenne et son gain doivent être choisies de façon que la puissance isotrope rayonnée équivalente (PIRE) ne dépasse pas ce qui est nécessaire pour une communication réussie.

Section 7.1.3 of RSS-GEN This Device complies with Industry Canada License-exempt RSS standard(s). Operation is subject to the following two conditions: 1) this device may not cause interference, and 2) this device must accept any interference, including interference that may cause undesired operation of the device.

Cet appareil est conforme avec Industrie Canada RSS standard exemptes de licence(s). Son fonctionnement est soumis aux deux conditions suivantes: 1) ce dispositif ne peut causer des interférences, et 2) cet appareil doit accepter toute interférence, y compris les interférences qui peuvent causer un mauvais fonctionnement du dispositif.

CAN ICES-3B/NMB-3B

Yale Locks & Hardware

24/7 Tech Support: 1-855-492-0505 • www.yalehome.com

Yale® is a registered trademark of ASSA ABLOY Residential Group. Other products' brand names may be trademarks or registered trademarks of their respective owners and are mentioned for reference purposes only. © Copyright 2020. All rights reserved. Reproduction in whole or in part without the express written permission of ASSA ABLOY Residential Group is prohibited.

Yale real Living

Yale® Assure Lock®
Interconnected Key Free Touchscreen
Installation and Programming Instructions
(YRC652)

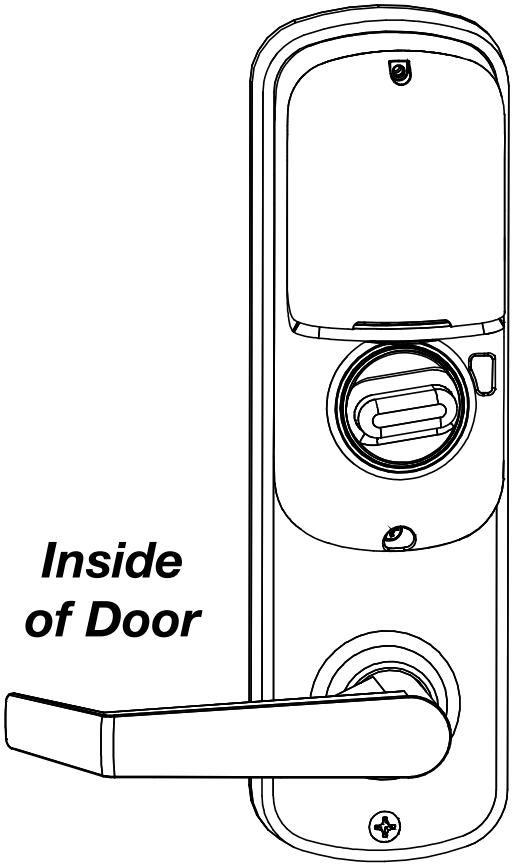

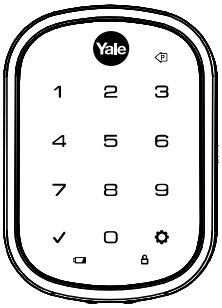

Inside of Door

Outside of Door

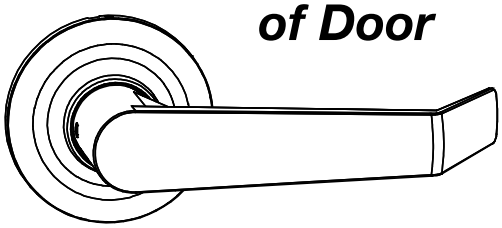

4" Shown - 5.5" Available

Before you begin

DOWNLOAD THE BILT APP

for step-by-step installation instructions & to register your product

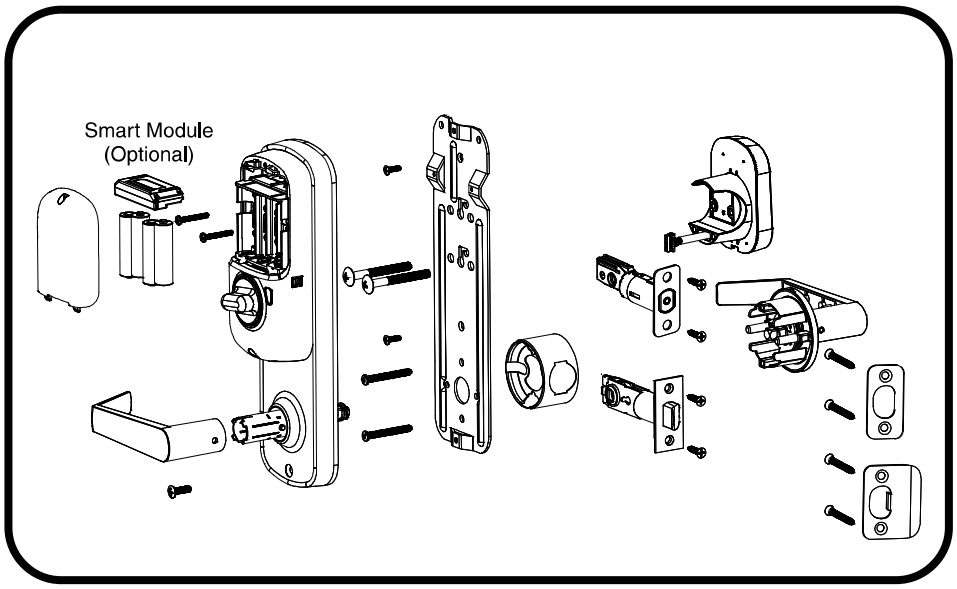

Retrofitting or modifying this product may impact fire rating, safety features and warranty.
Consult with code specifications to ensure compliance with all codes and ratings.

Before You Begin

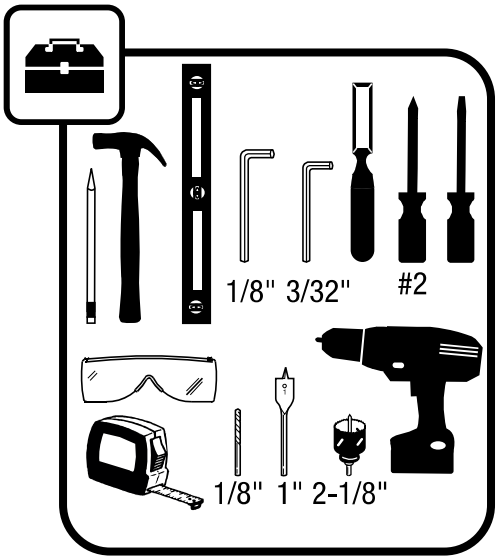

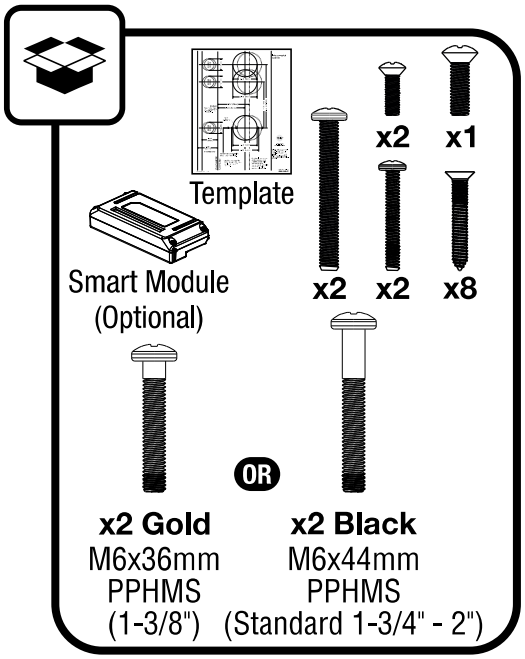

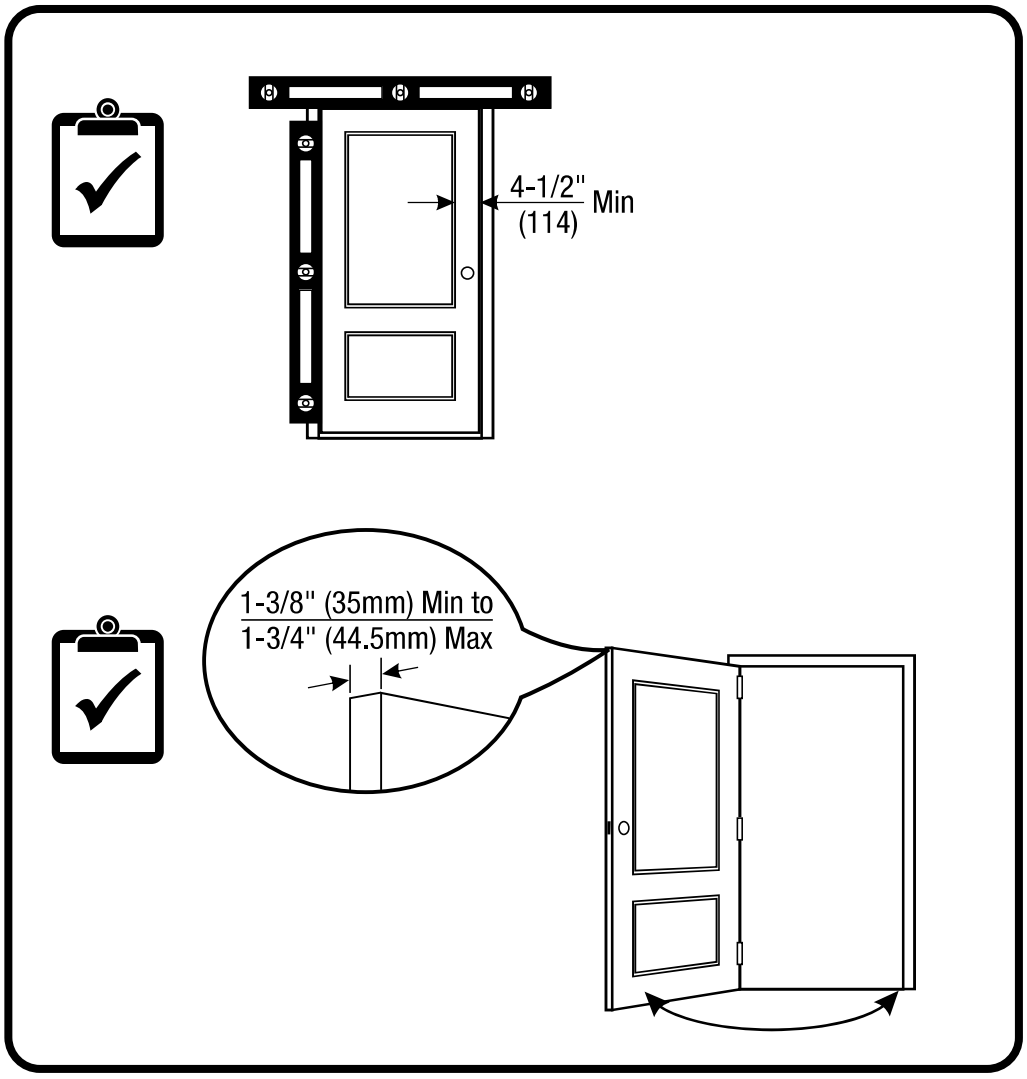

Mark Door Reference Lines

EXISTING

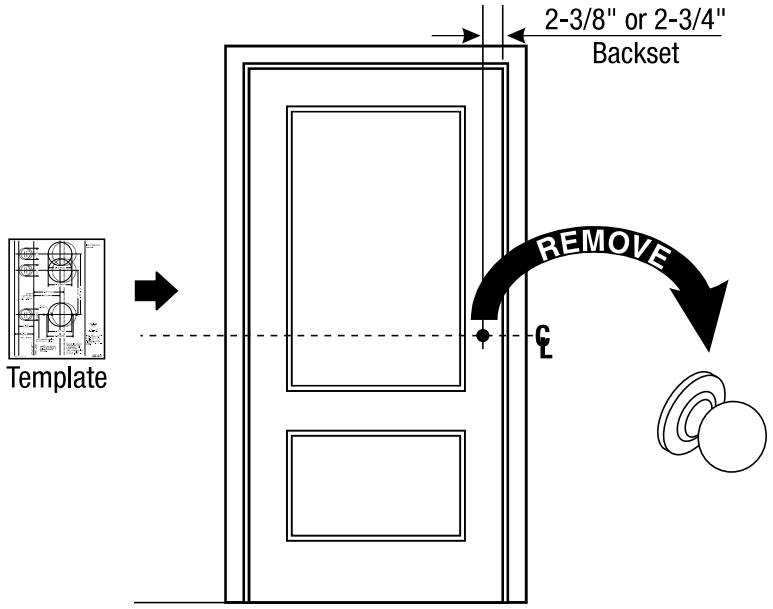

1 Preparing Door *(if necessary)*

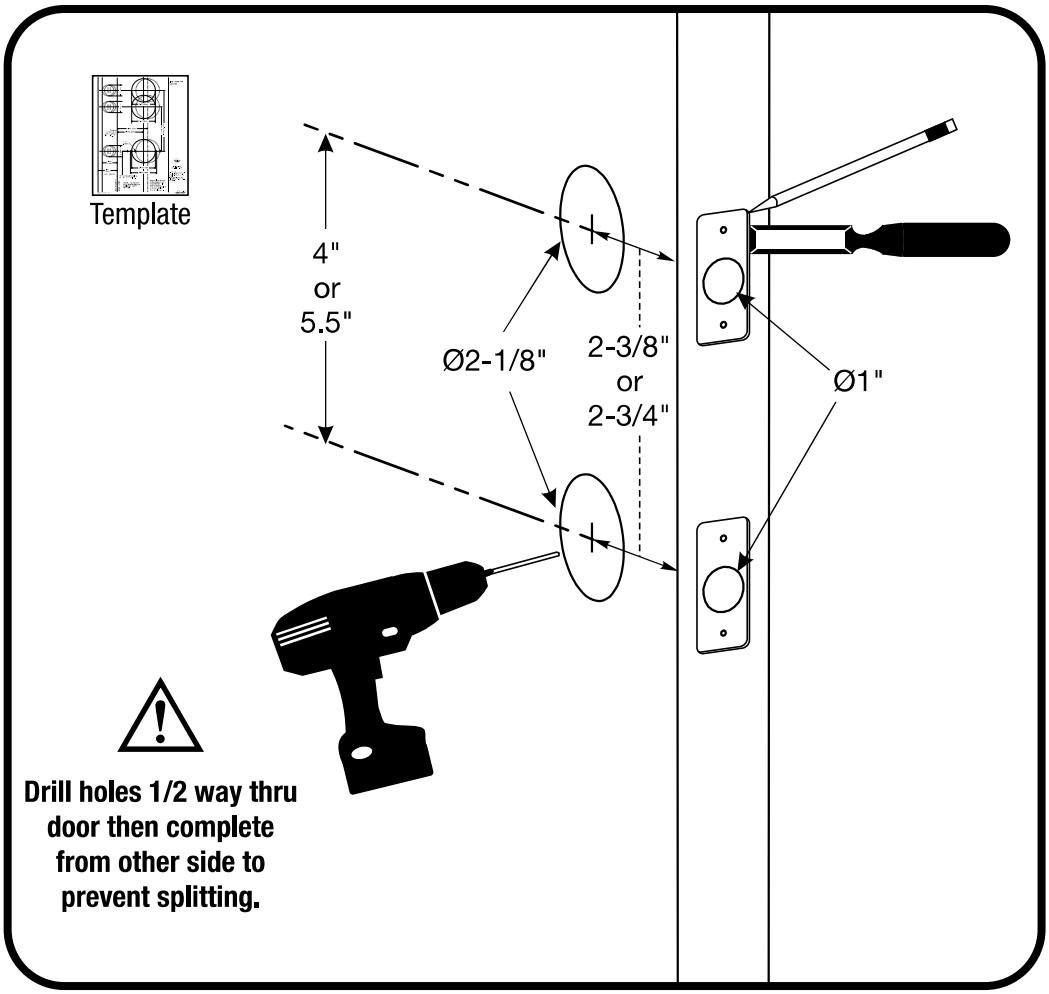

2 Installing Strike Plates

7-16 / 8-32 x 1" UNCWS

x4

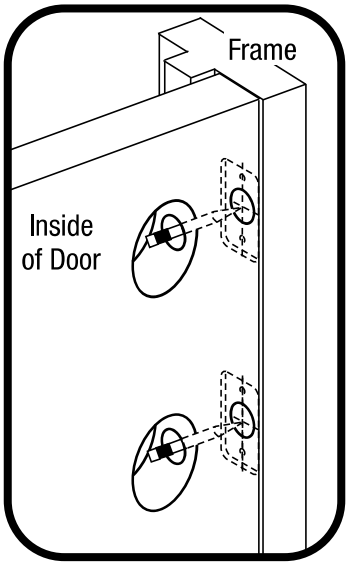

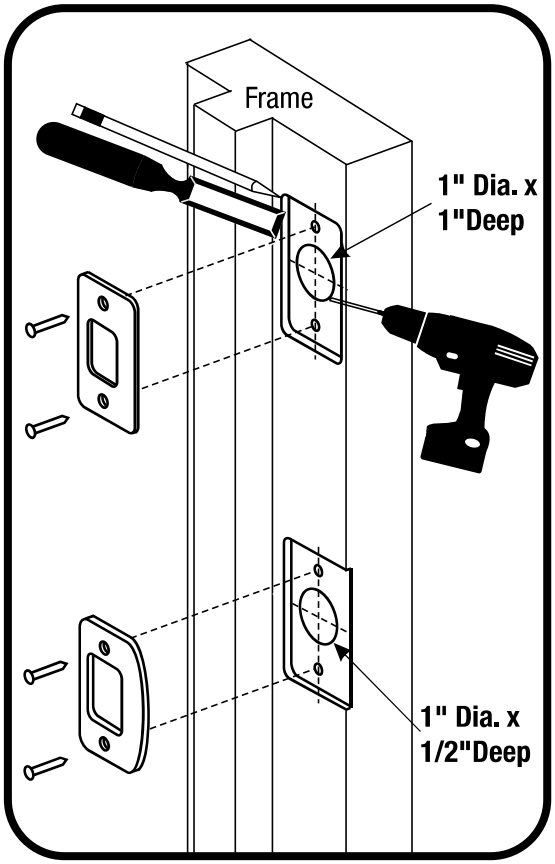

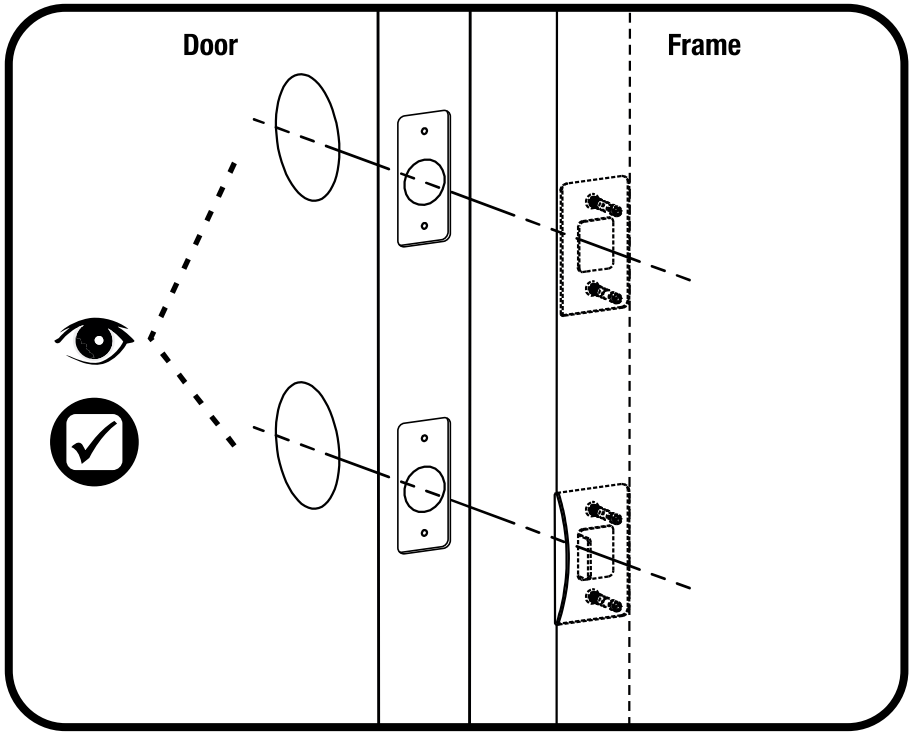

Determining Handing

The hand of a door is determined from the secure side of the door. The term "secure" means the side from which you initially unlock and enter.

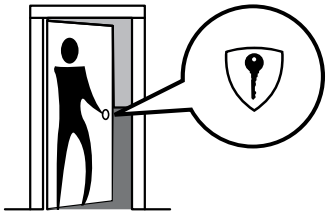

Left Hand “LH”, Hinges Left.
Open Inward.

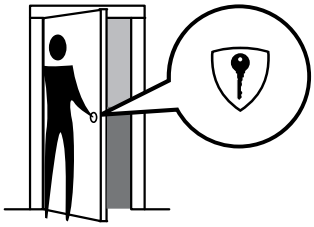

Left Hand Reverse "LHR", Hinges Left.
Open Outward.

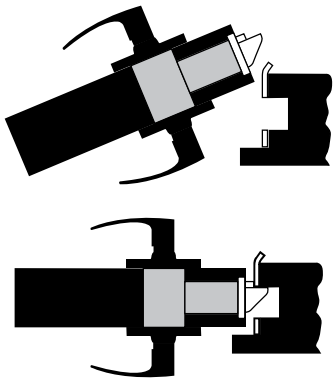

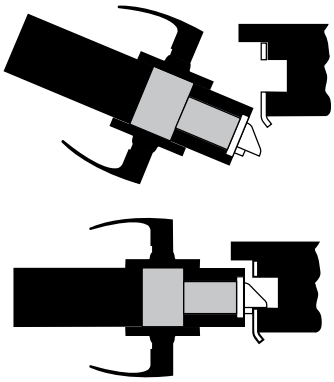

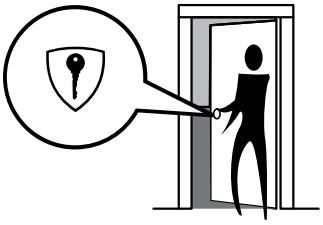

Right Hand "RH", Hinges Right.
Open Inward.

Right Hand Reverse "RHR", Hinges Right.
Open Outward.

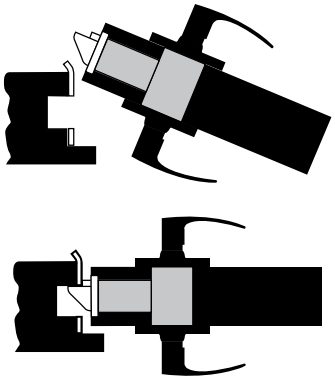

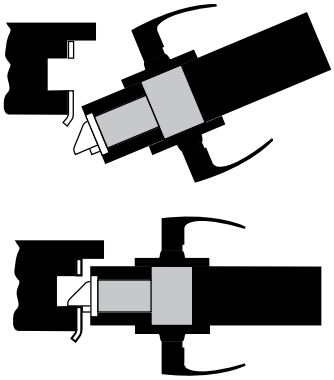

3 Changing Handing *(if necessary)*

4" Left Hand to 4" Right Hand Shown

4-24 x 1/4" PPHMS

x2

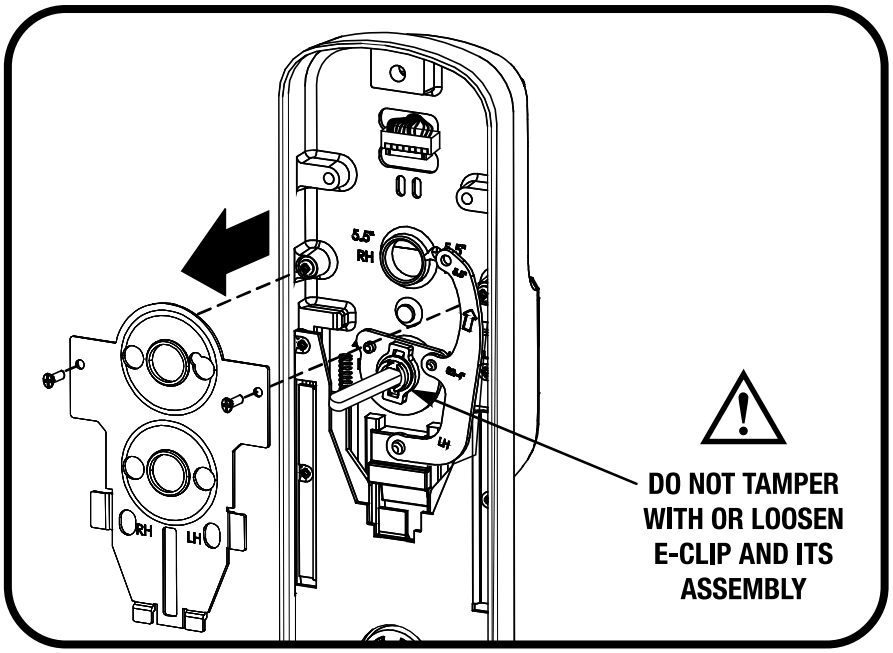

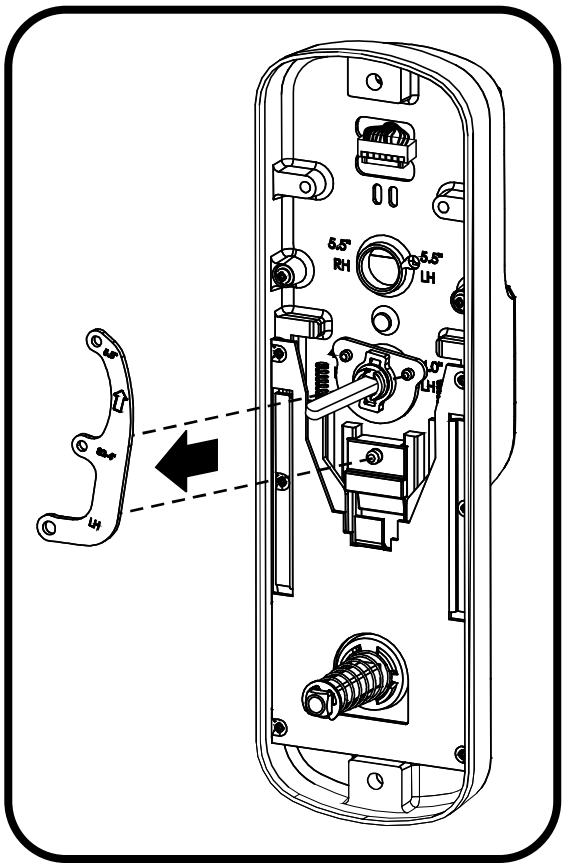

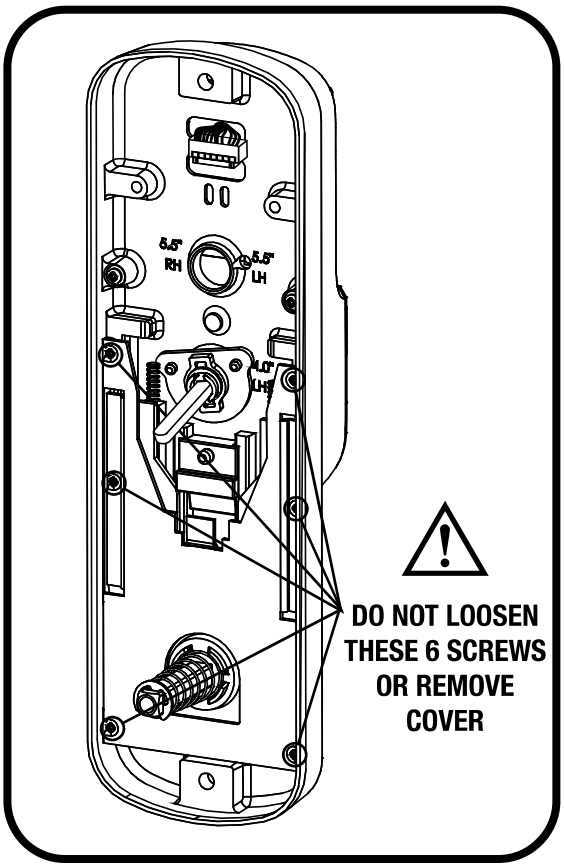

3 Changing Handing *(if necessary)* continued

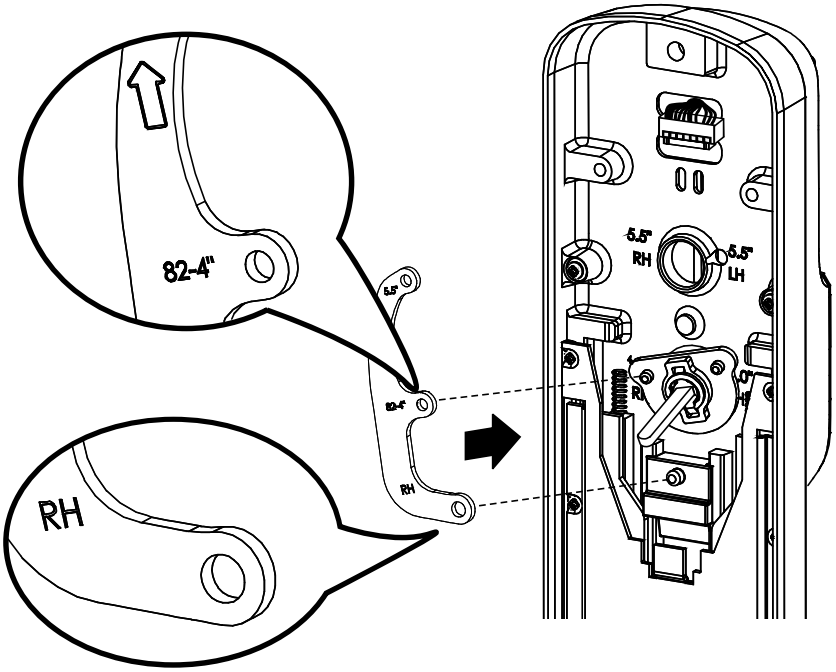

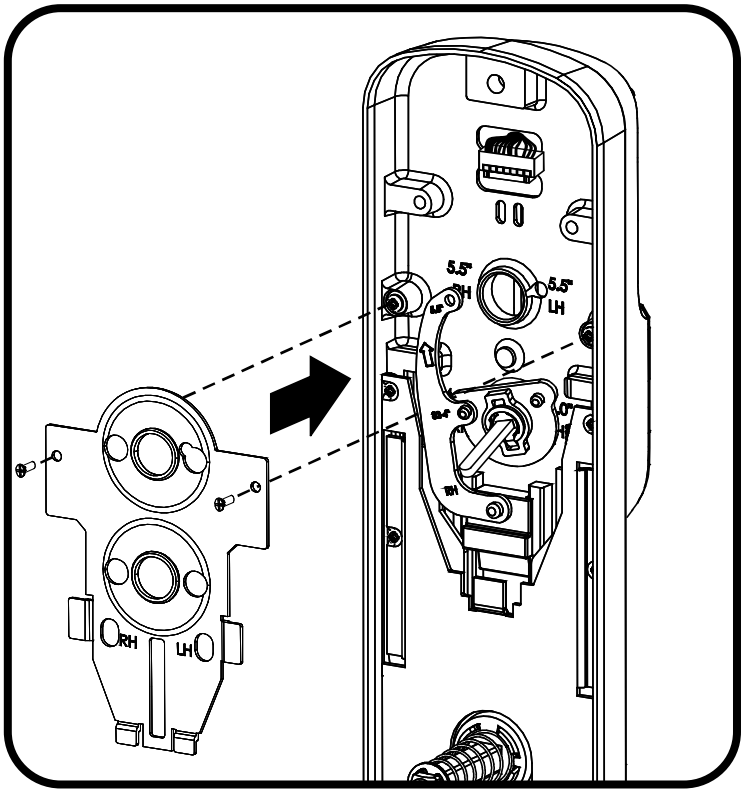

Lockset Handing Configurations

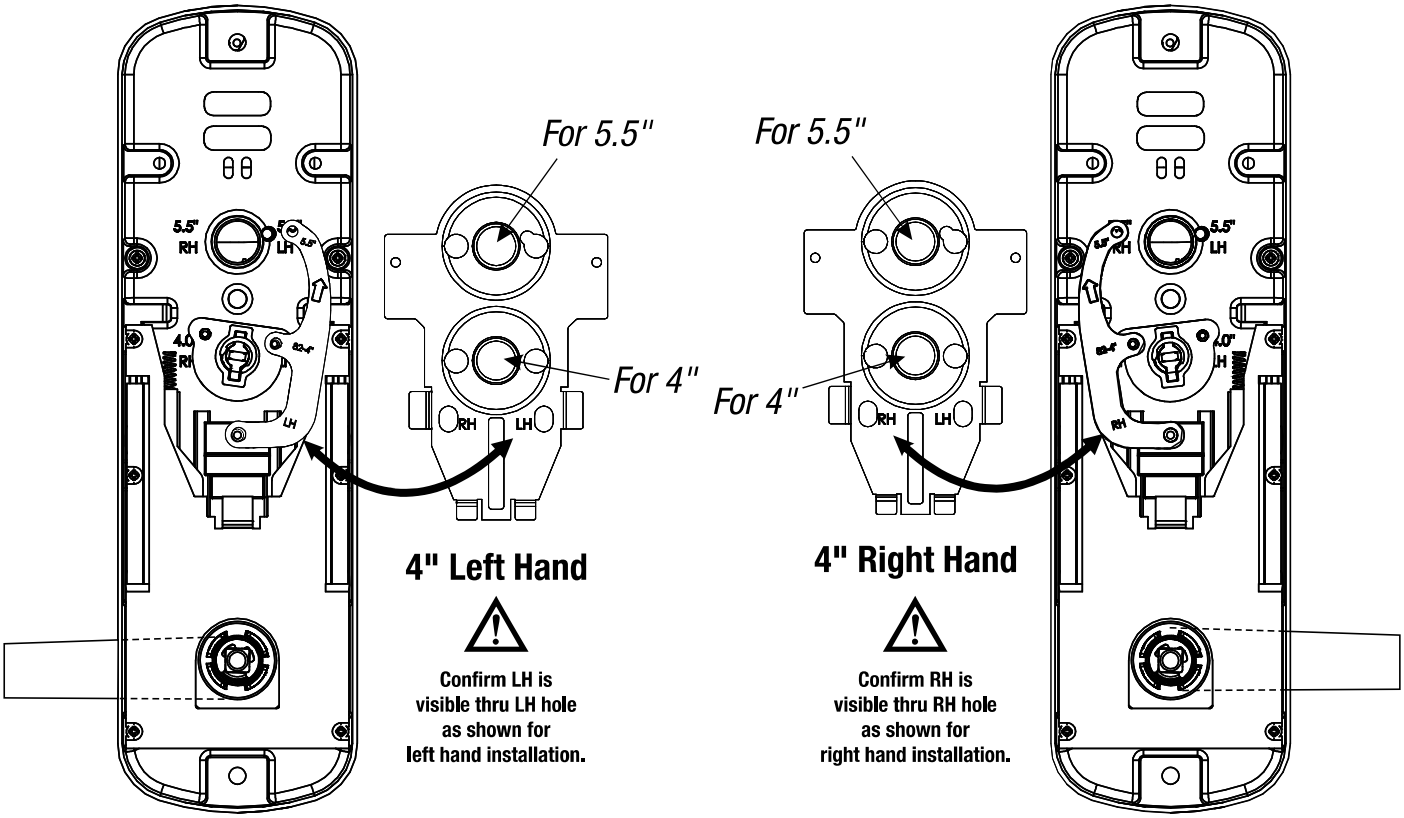

4" Left Hand

Confirm LH is visible thru LH hole as shown for left hand installation.

4" Right Hand

Confirm RH is visible thru RH hole as shown for right hand installation.

Test Lever and Thumbturn

After handing is changed, check that lever and thumbturn rotate freely.

4 Installing Fire Cup

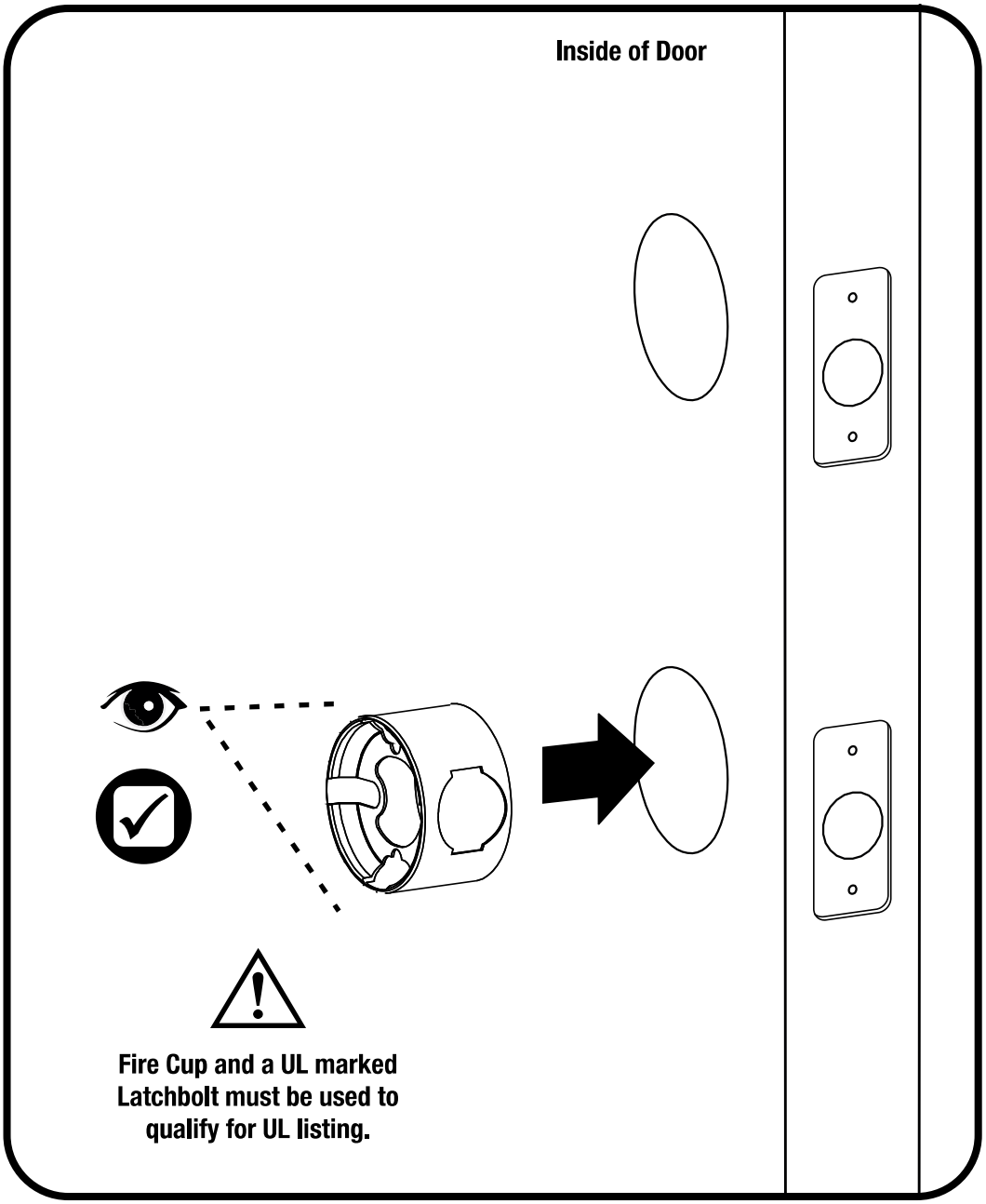

5 Adjusting Deadbolt Latch

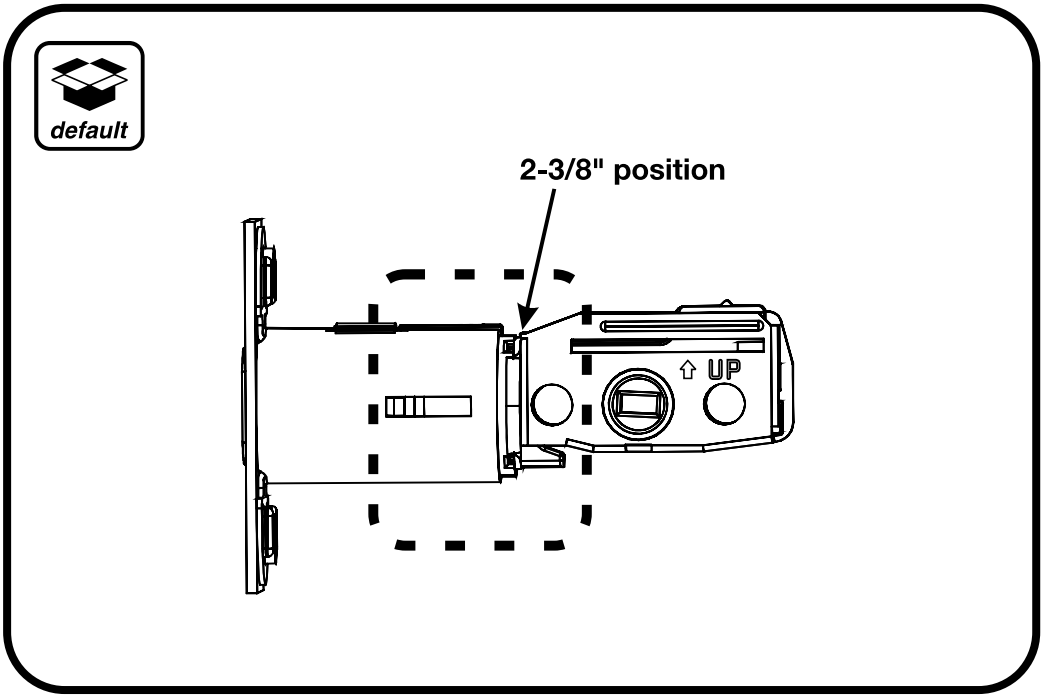

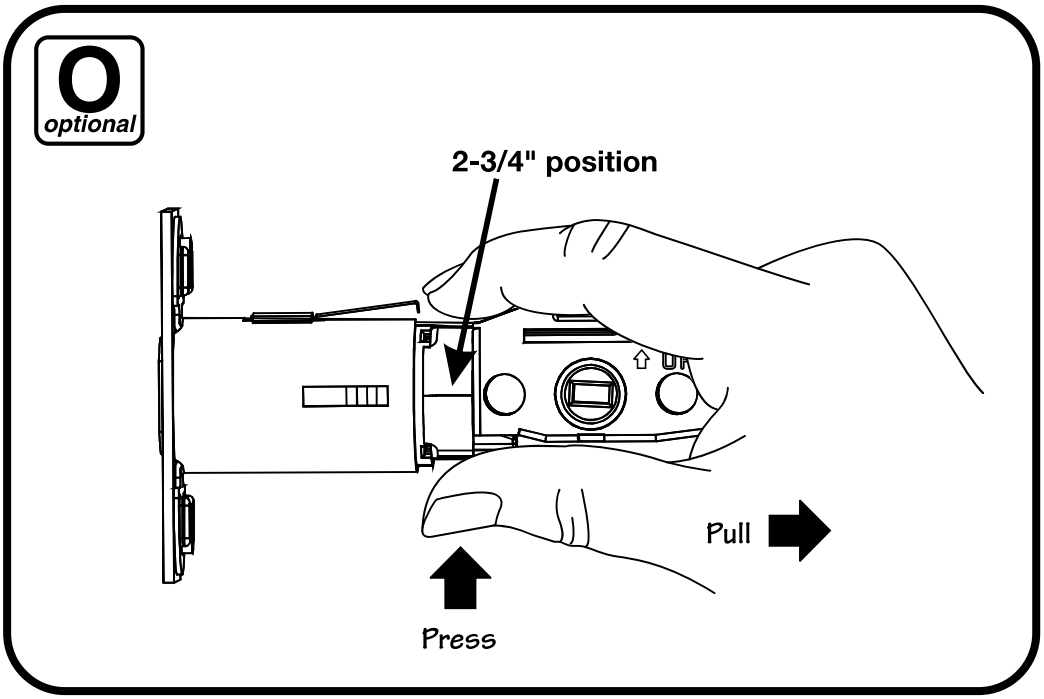

6 Installing Deadbolt Latch & Latchbolt

7-16 / 8-32 x 1" UNCWS

x4

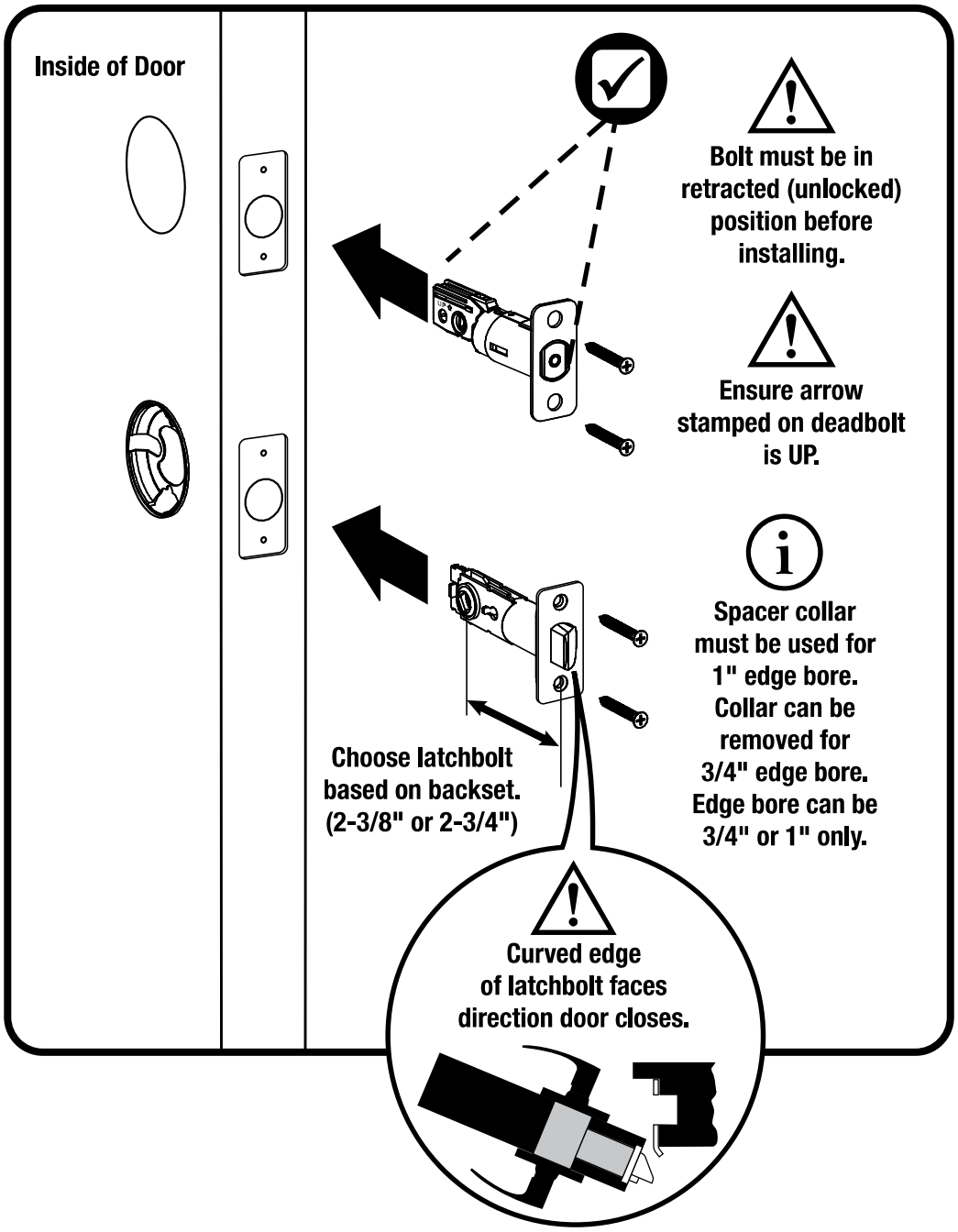

7 Installing Exterior Deadbolt

M6x44 PPHMS for standard door thickness shown

x2

Choose through bolt appropriate for your door thickness.

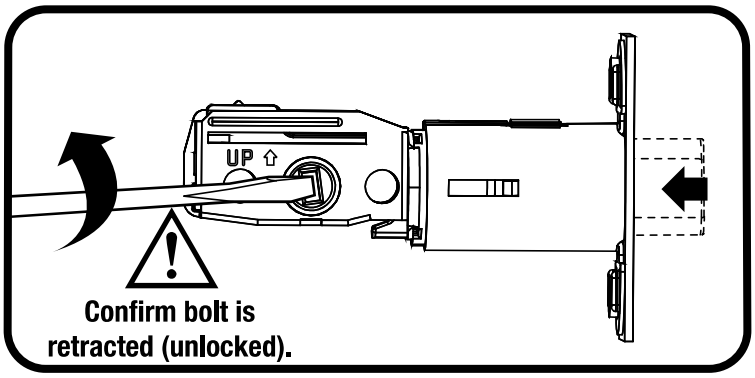

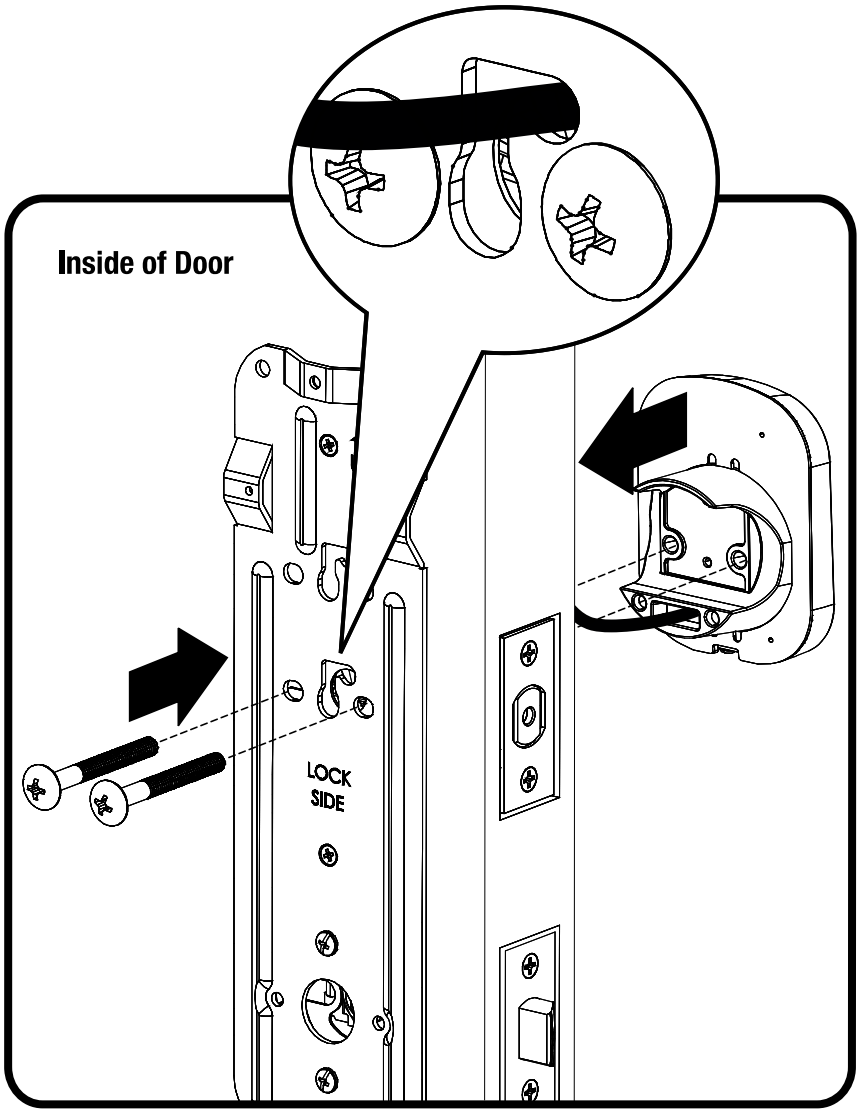

8 Installing Lock Chassis

10-32 x 1-1/2" PPHMS

x2

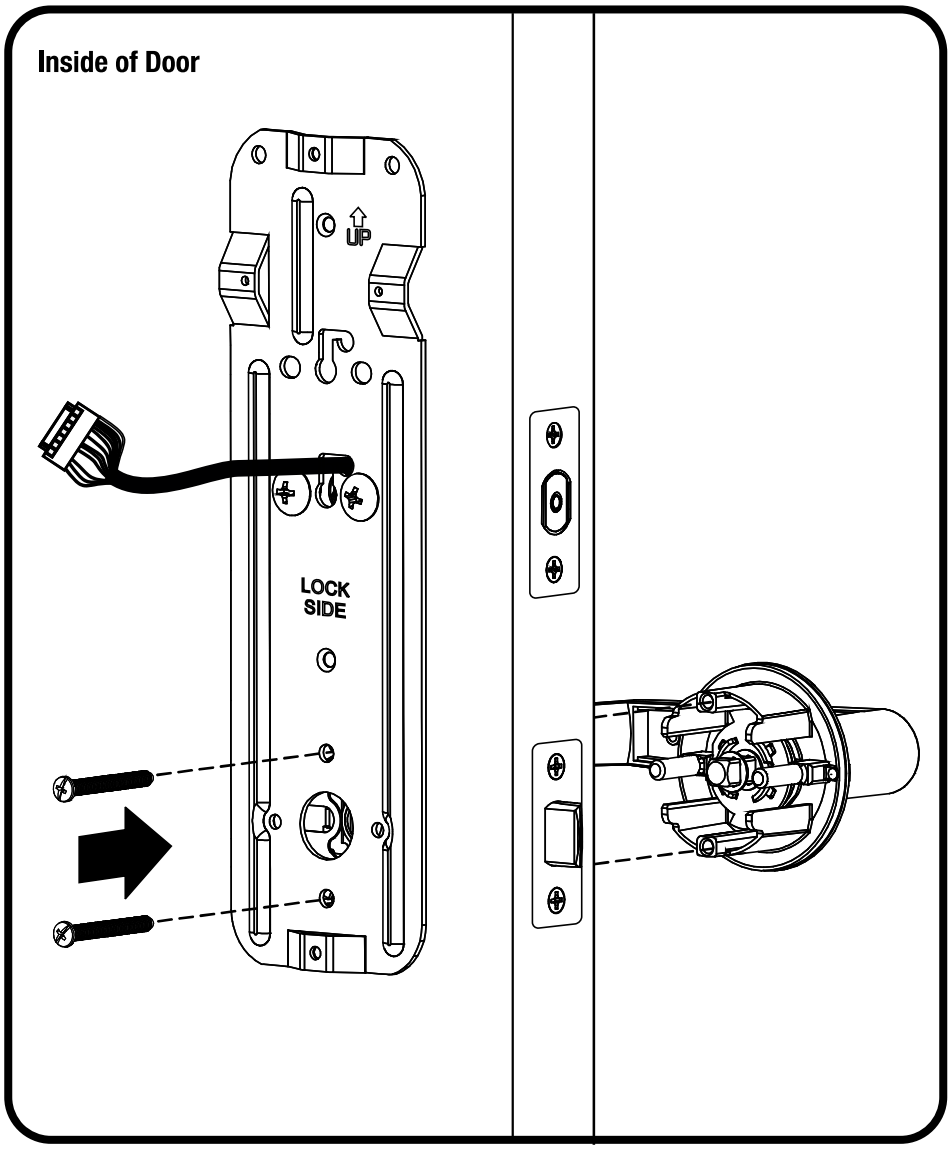

9 Securing Back Plate to Door

#6-32 x 1/2" POHMS

x2

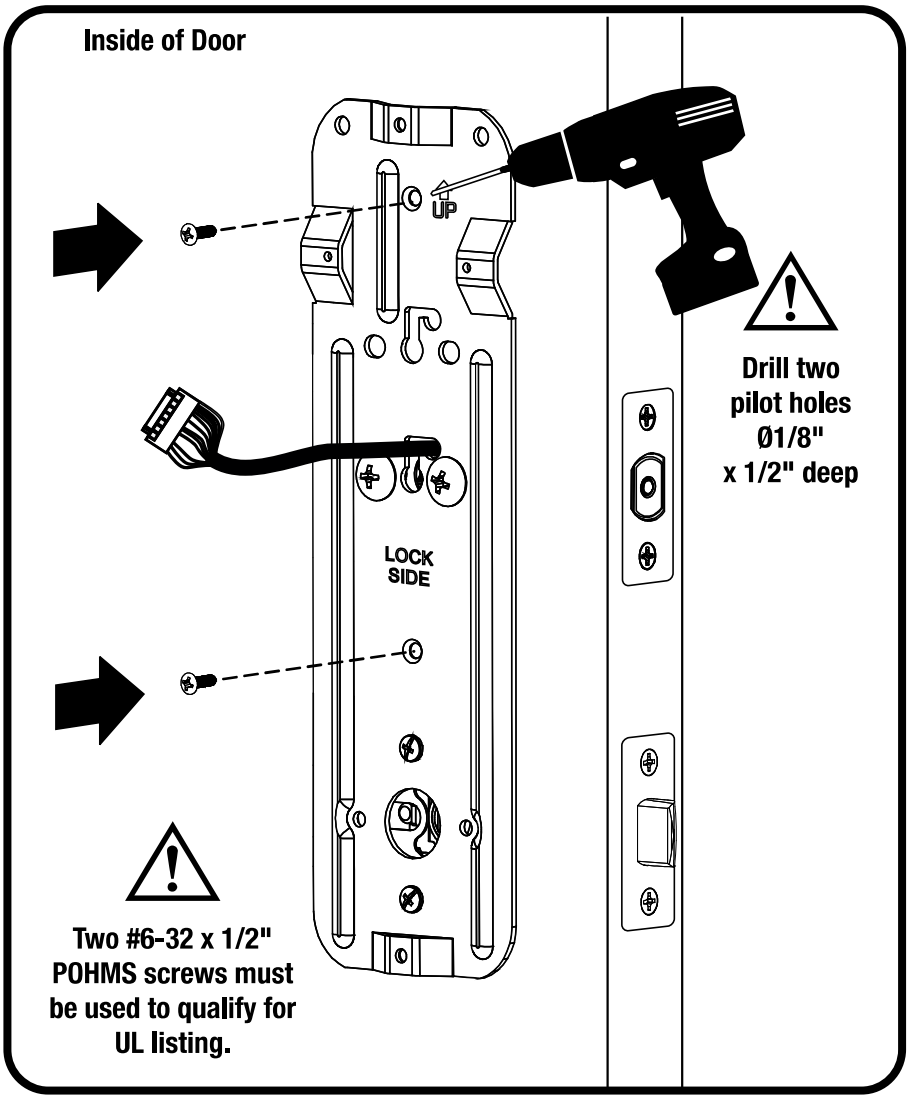

Testing Latchbolt Operation

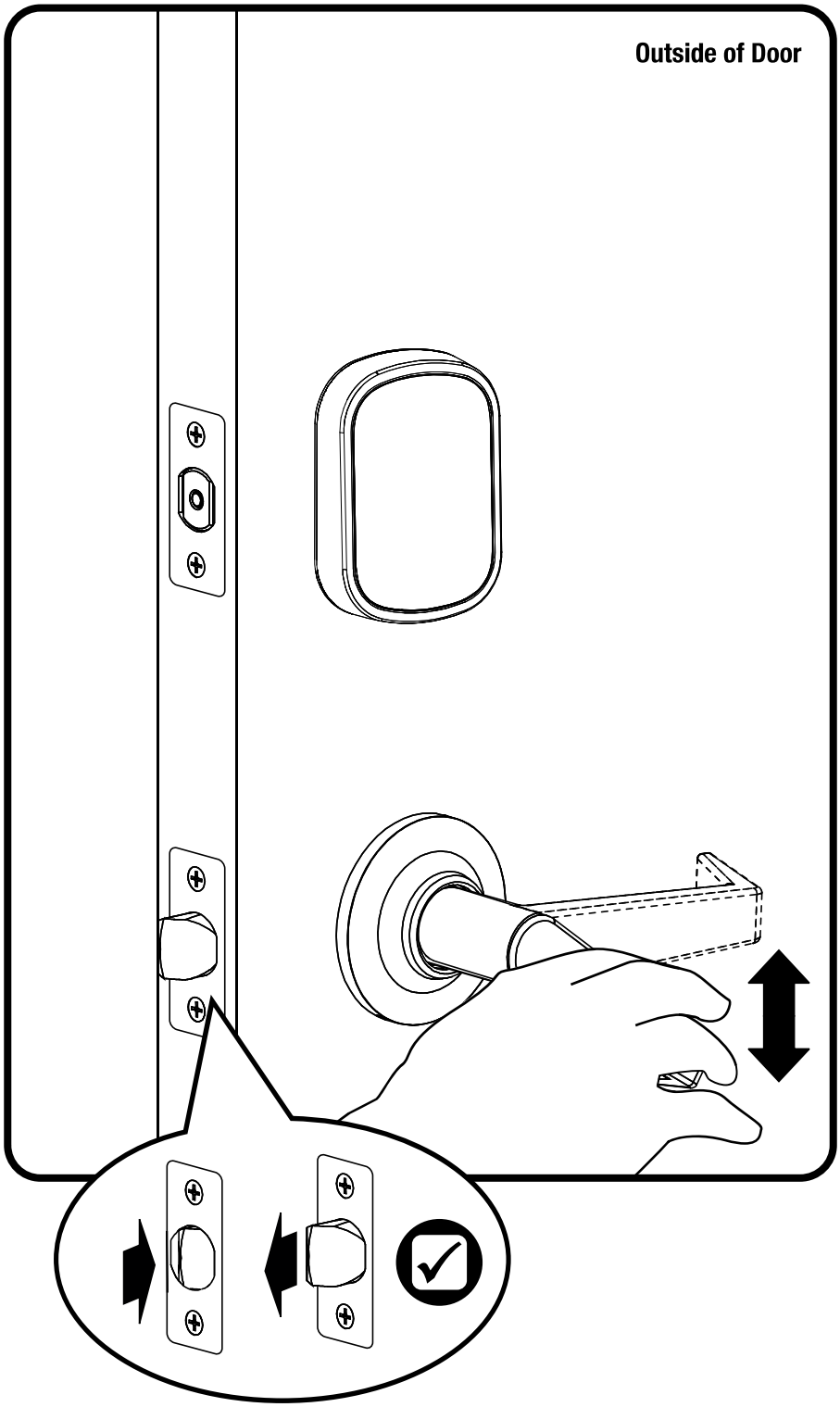

10 Attaching the Cable Assembly

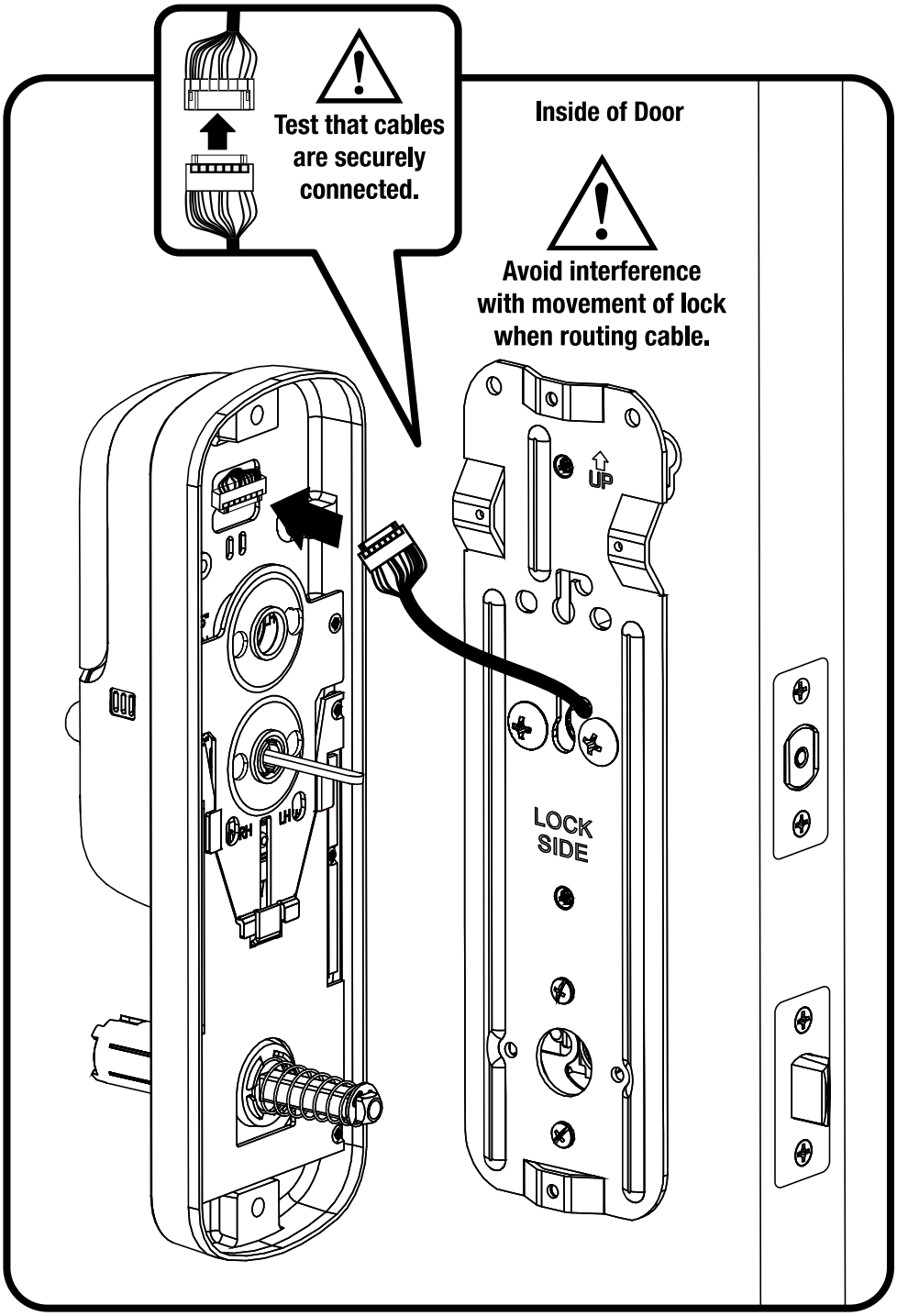

11 Installing Interior Lock

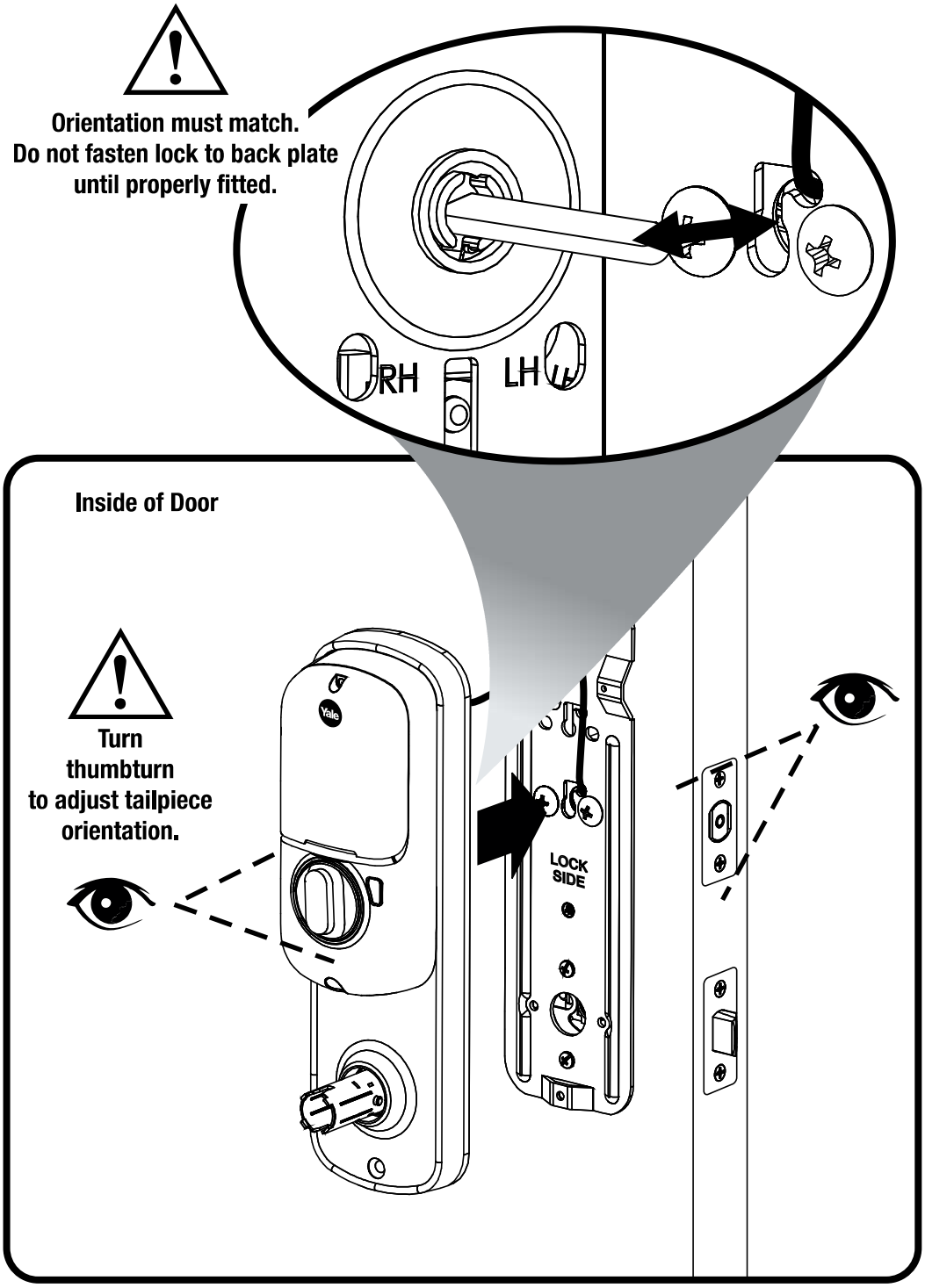

11 Installing Interior Lock continued

10-32 x 5/8" POHMS

x1

6-32 x 1" PPHMS

x2

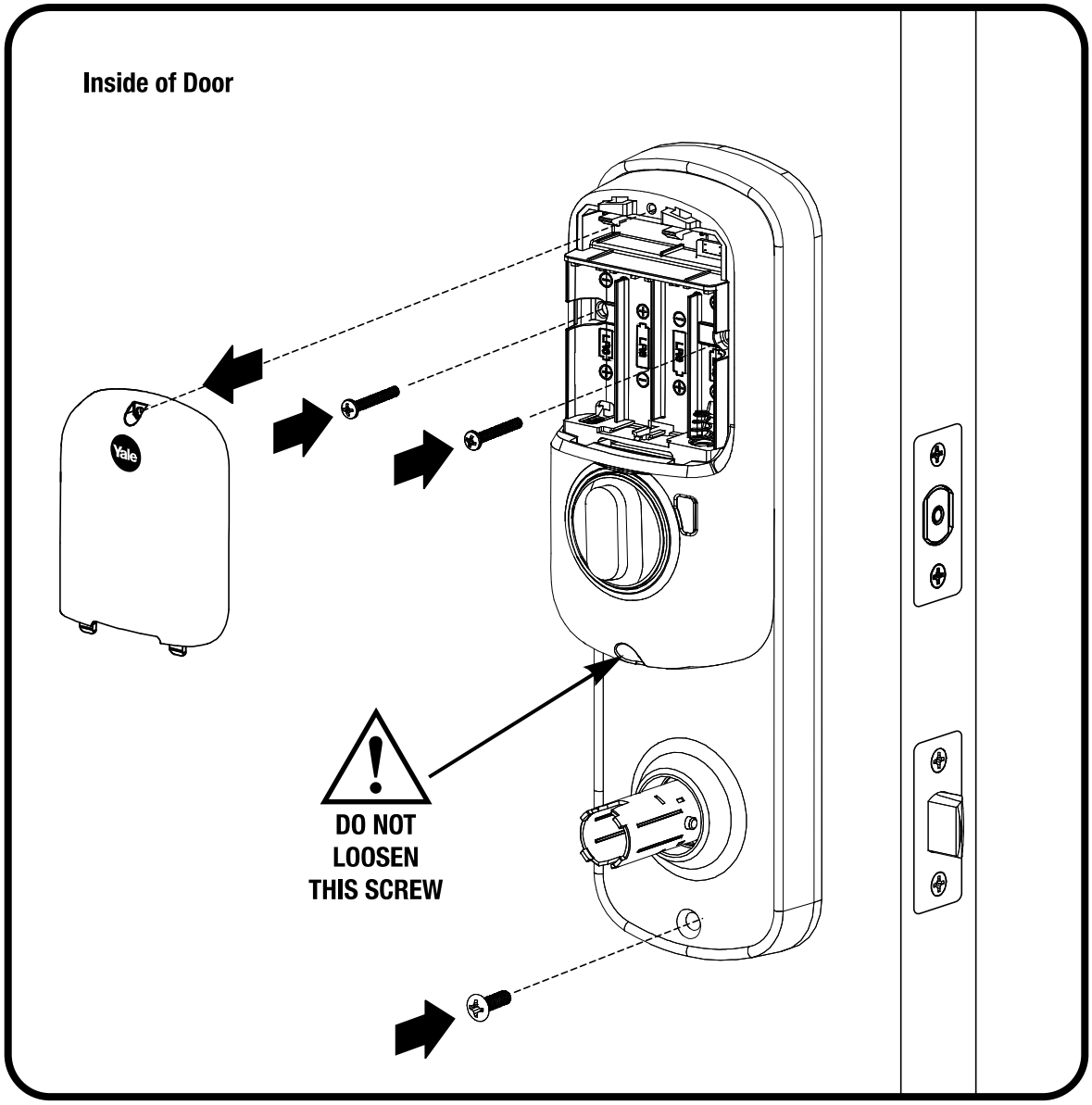

12 Installing Interior Lever

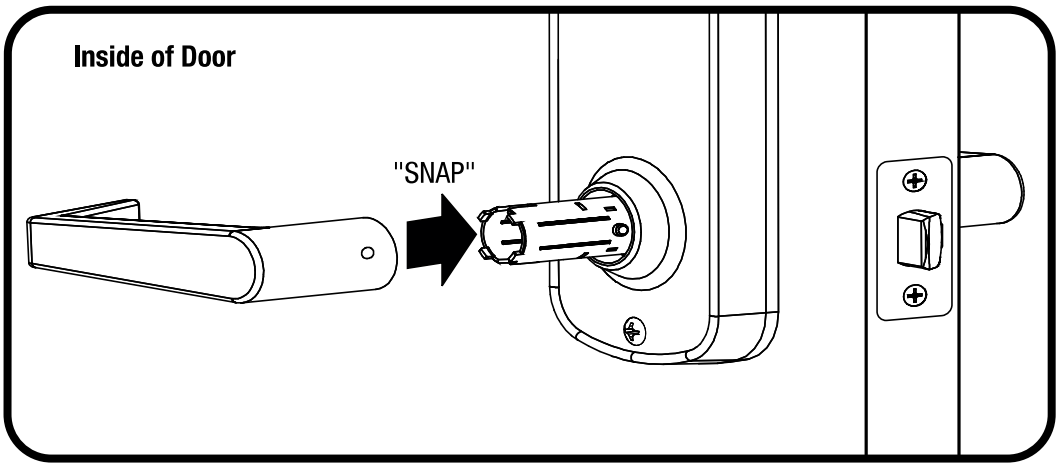

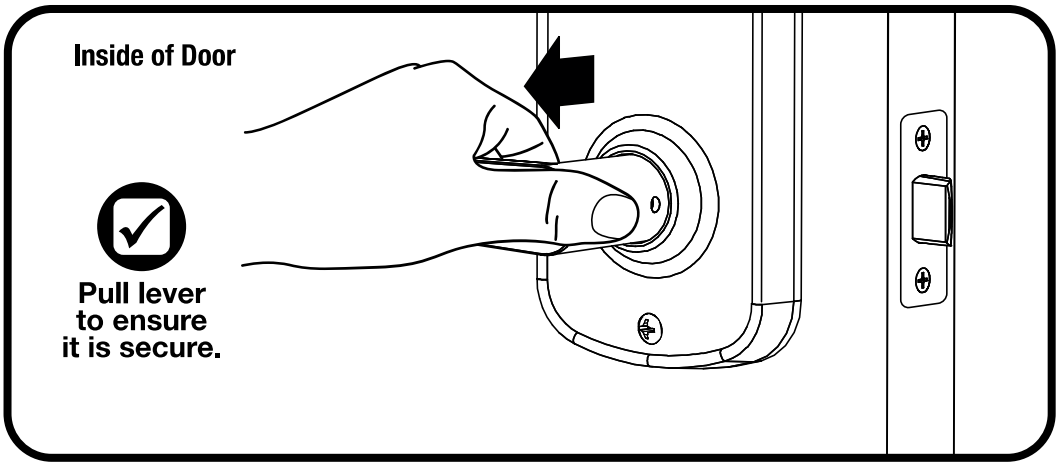

Testing Final Latchbolt Operation

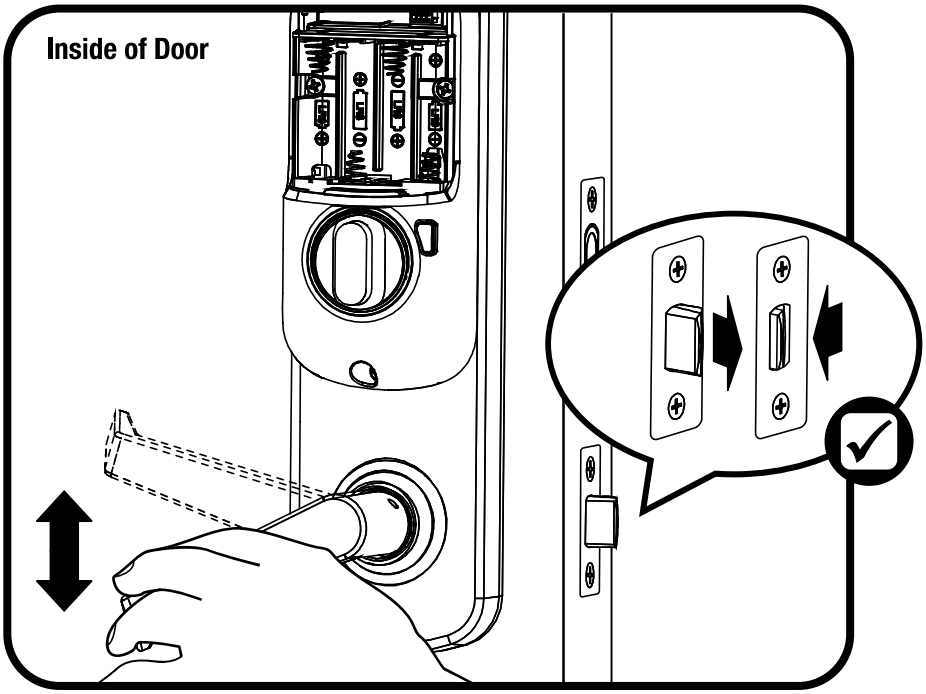

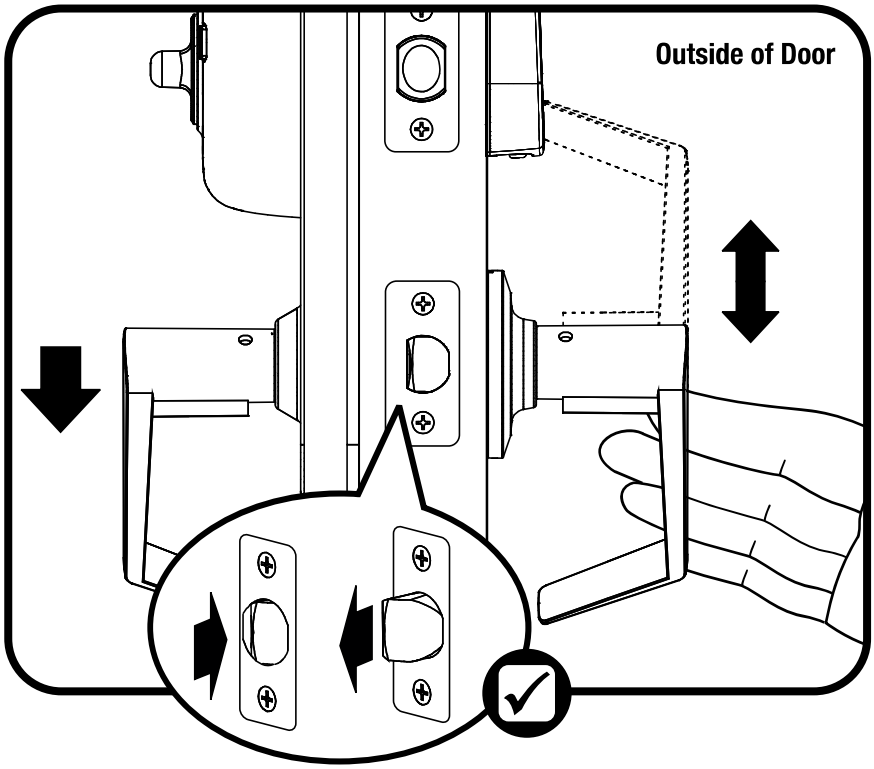

Testing Final Deadbolt Operation

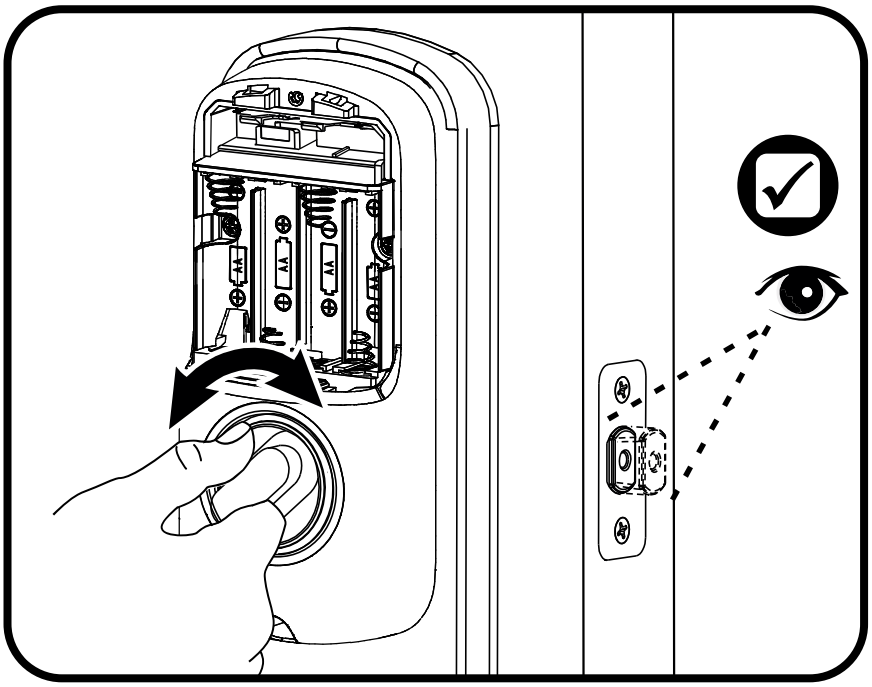

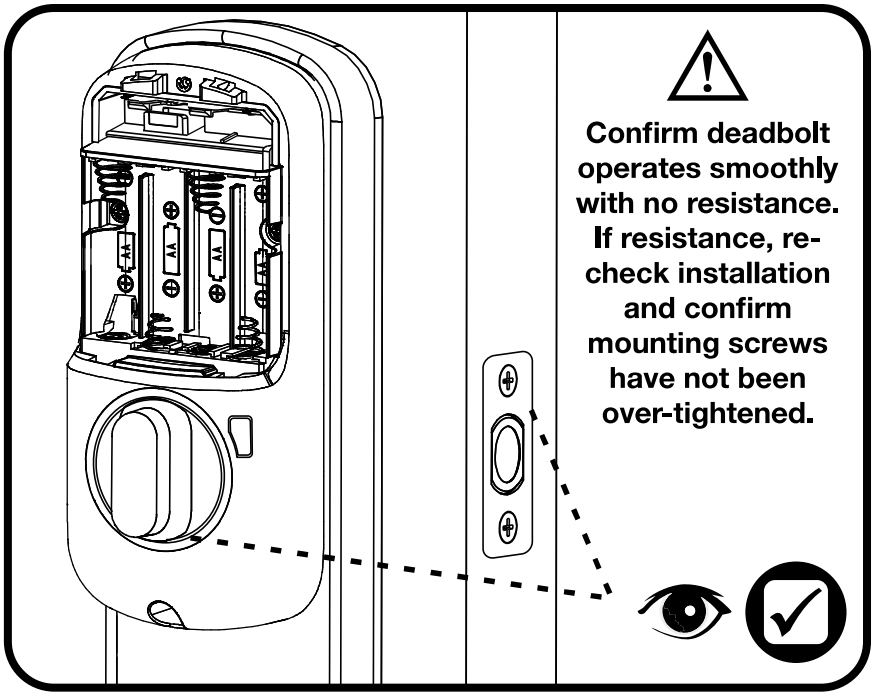

13 Installing Optional Smart Module

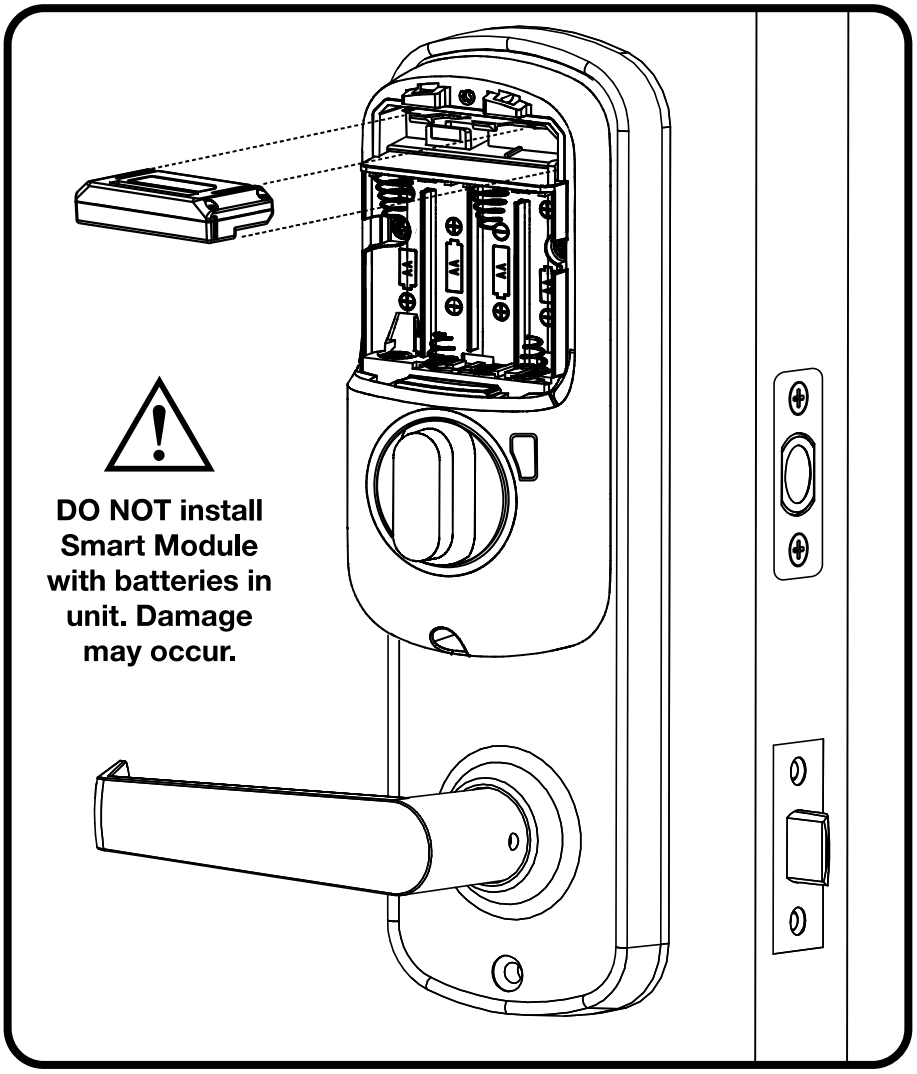

14 Installing Batteries & Cover

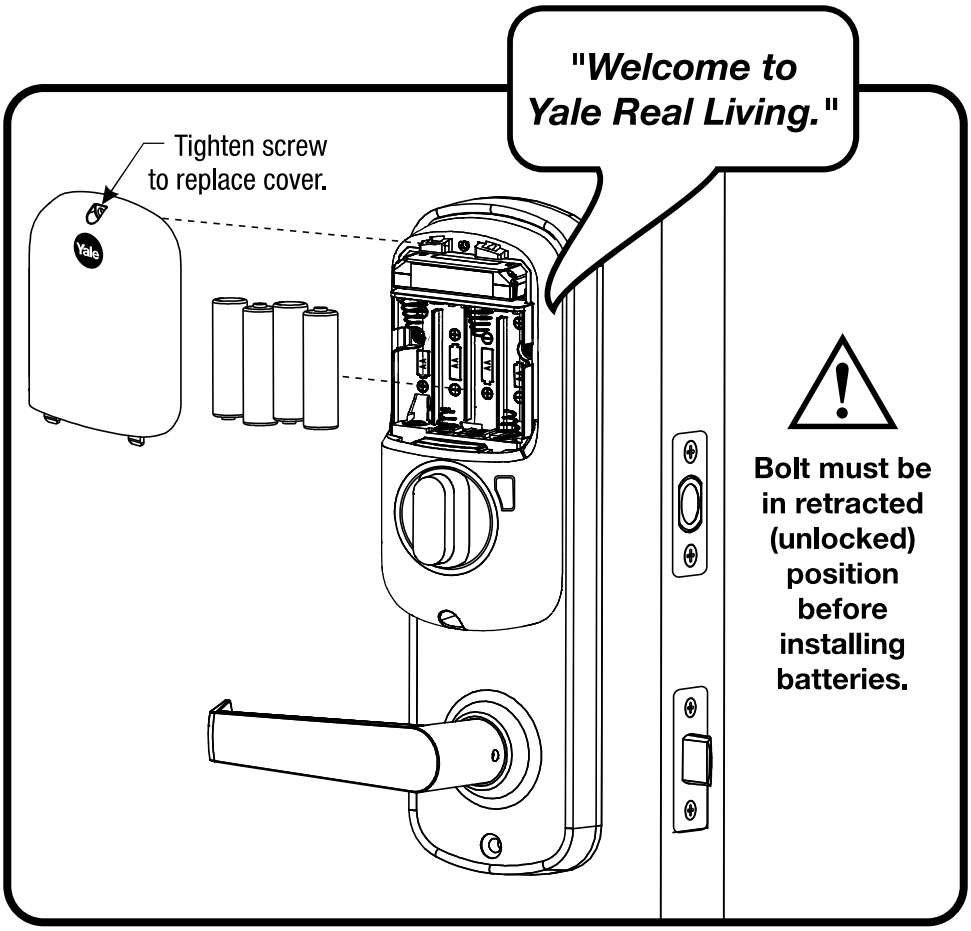

Handing the Lock

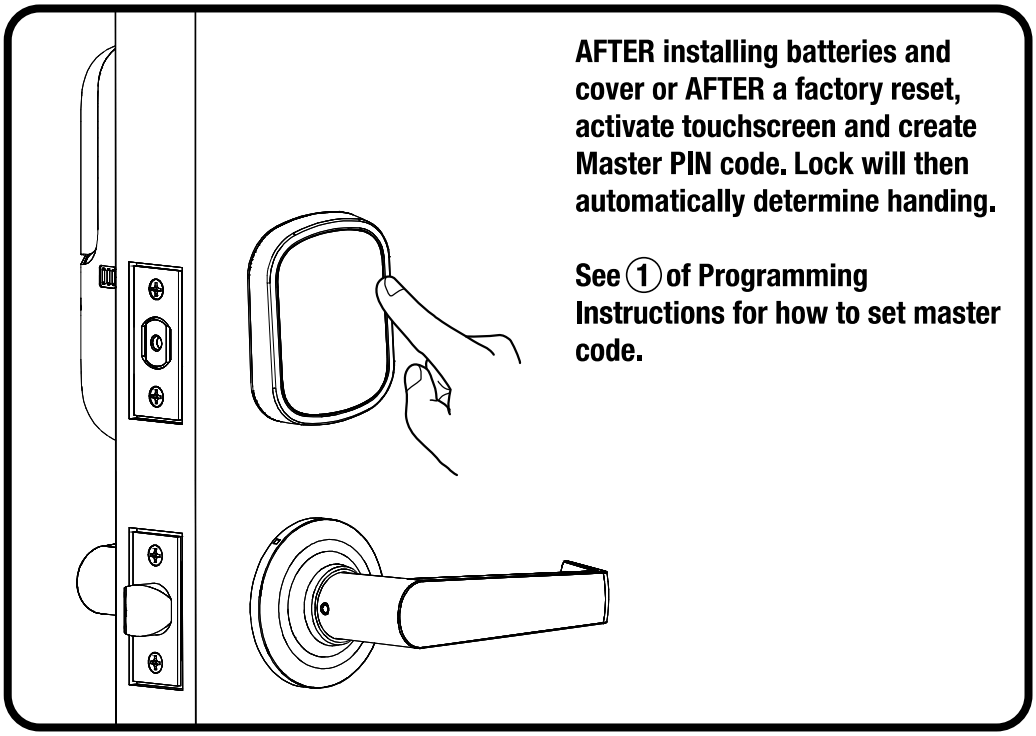

Congratulations, you've installed the
Yale® Assure Lock® Interconnected Key Free Touchscreen (YRC256)!
Continue with the Programming Instructions
to customize your product.

Hardware Troubleshooting

Cycle lock in both the locked and unlocked positions. If problems are found:

Bolt will not extend and lock jam alarm occurs a. Confirm manual operation. b. Enter your Master PIN code. c. With the bolt retracted, press menu Option 3 for Advanced Lock Settings. d. Press Option 5 to rehand the lock. e. Test the operation; locking the door via the keypad.
Door is binding a. Check that door and frame are properly aligned and door is free swinging. b. Check hinges: They should not be loose or have excessive wear on knuckles.
Bolt will not deadlock a. Check for sufficient clearance of the bolt within the strike-side jamb. Correct this by increasing the depth of the pocket for the bolt. b. Check for misalignment of bolt and/or strike which may be preventing bolt from properly entering the strike. With the door open, extend and retract the bolt; if it is smooth, check the strike alignment.
Bolt does not extend or retract smoothly a. Bolt and strike are misaligned, see above. b. Check the backset of door relative to adjustments already made to bolt. c. Verify proper door preparation and re-bore holes that are too small or misaligned. d. Verify touchscreen wire harness is routed properly (see Step 10). e. Verify bolt is installed with correct side up (see Step 6).
Keypad numerics are scrolling Remove interior lock and check to ensure that the wire harness is routed properly (see Step 10).

NOTE TO INSTALLER AND CONSUMER
While Yale® has included several features to prevent lockout (9-Volt battery jumper, low battery warnings), it is still possible for a lockout situation to occur. Because this product does not have a mechanical override (a key), Yale® recommends to use this product in an environment where there are additional entry points into the dwelling.

Programming Instructions

Exterior Escutcheon

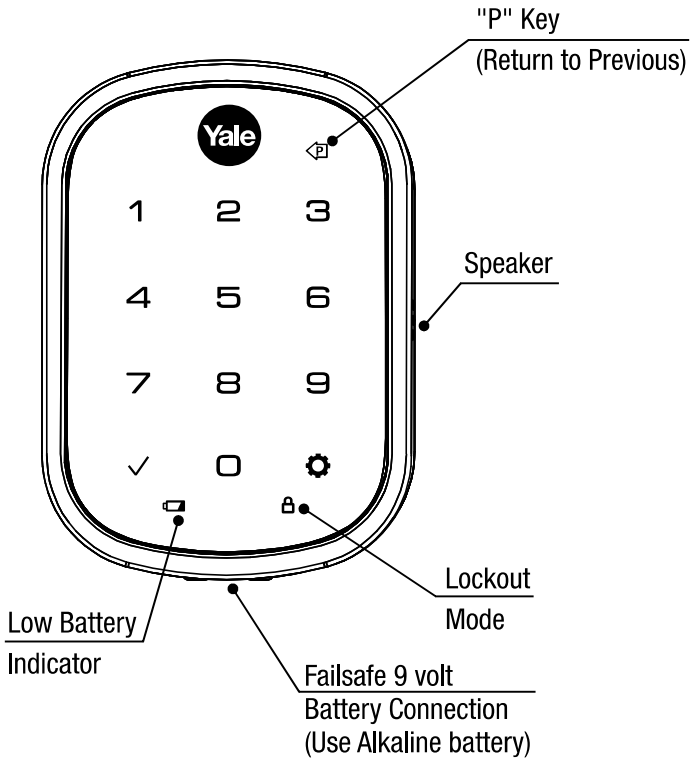

Interior Escutcheon

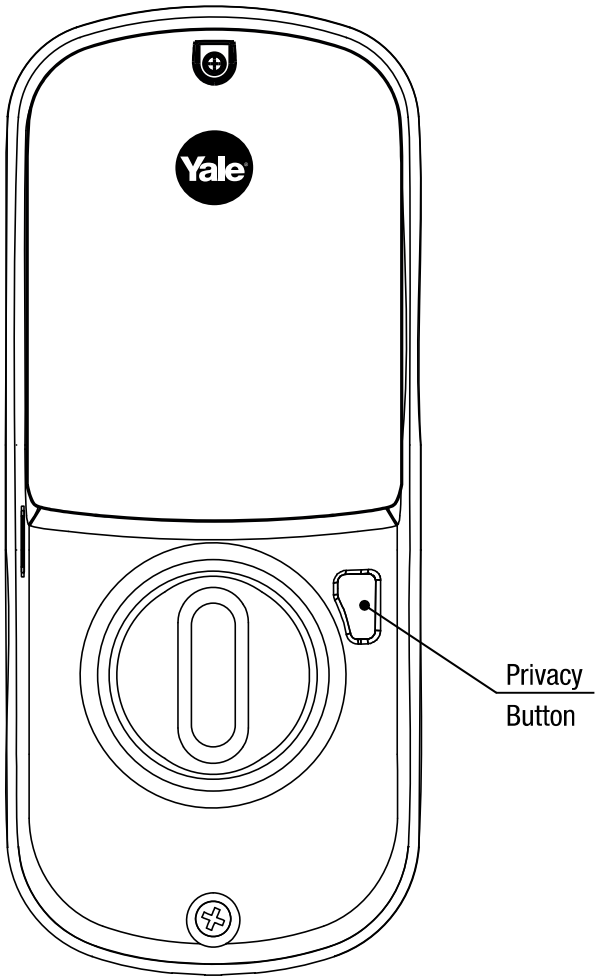

Lock Activation

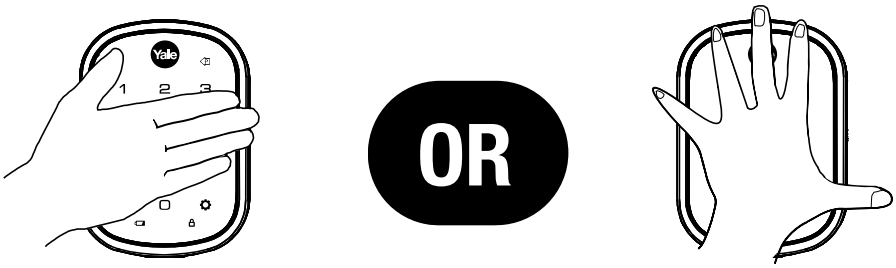

Master PIN Code must be created before any further programming.
Max User Codes = 250 with Z-Wave Plus or Zigbee network module
Max User Codes = 25 without network module or with iM1 network module
Max User Codes = 12 with Bluetooth

1 Creating Master PIN Code

Creating a Master PIN Code must be performed upon installation or after resetting the lock to factory default. Programming and use of lock is not possible until this step has been successfully completed.

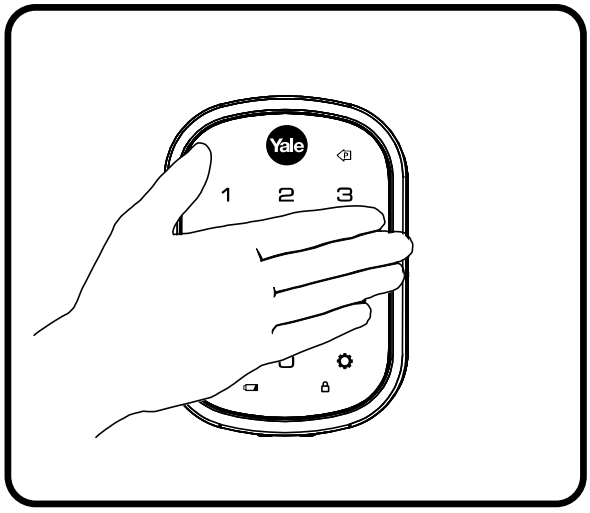

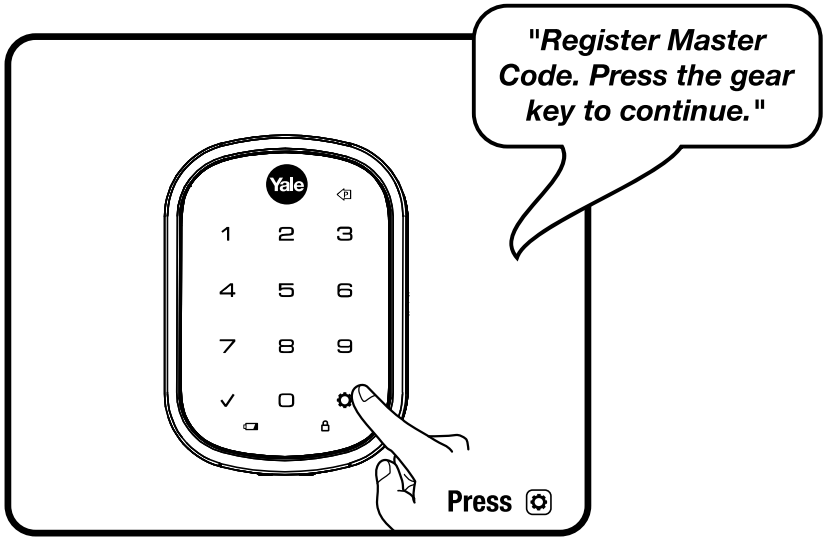

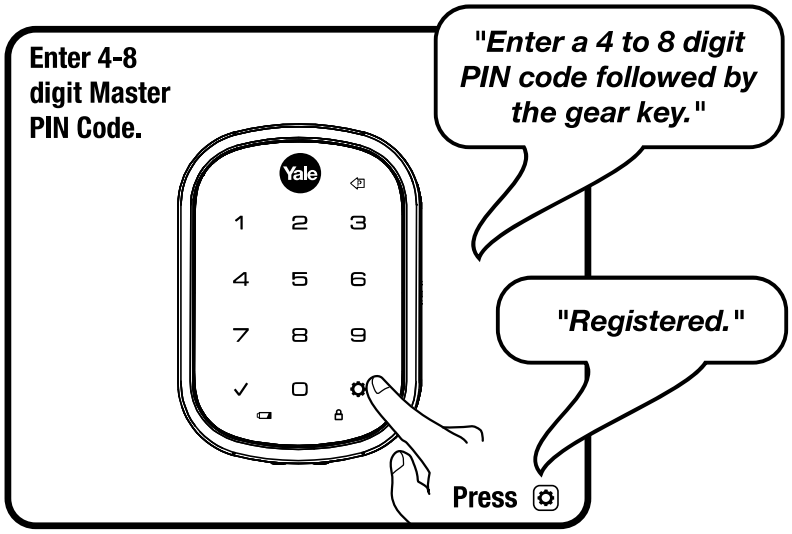

2 Creating User PIN Codes

Master PIN code must be created first.
*Max user codes = 250 with Z-Wave or Zigbee network module
Max user codes = 25 without network module or with iM1 network module
Max user codes = 12 with Bluetooth

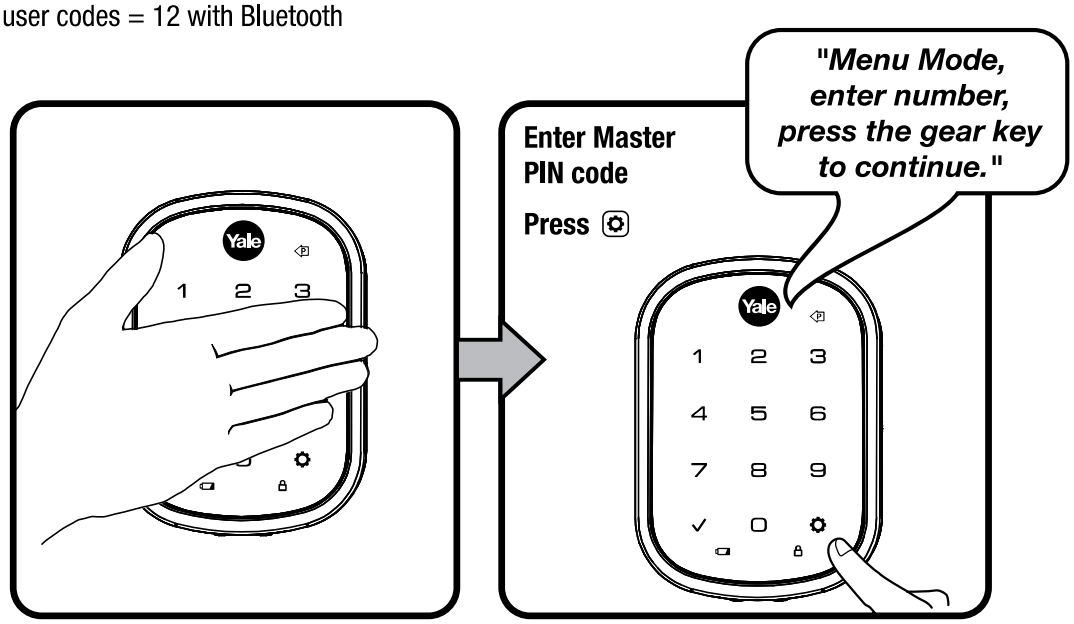

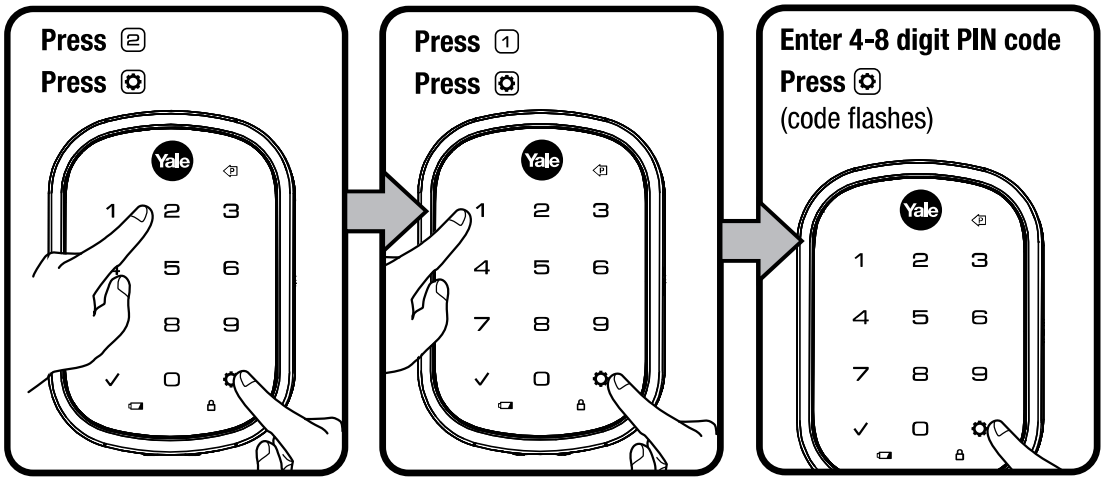

Adding more *User Codes:

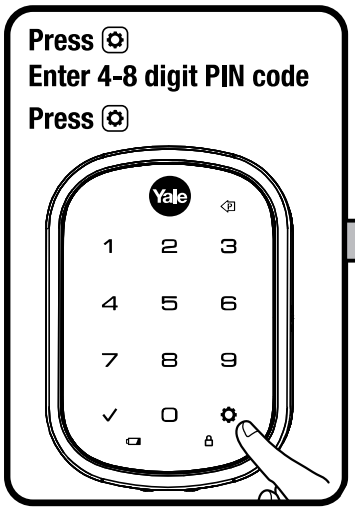

To end programming:

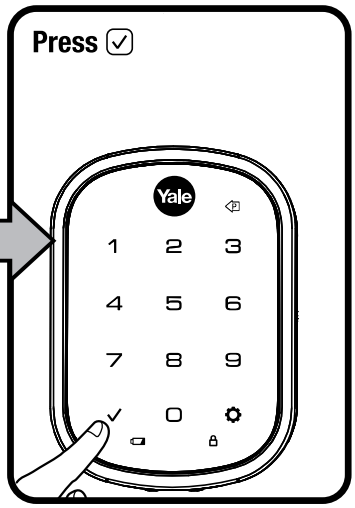

3 Unlocking Door with PIN Code

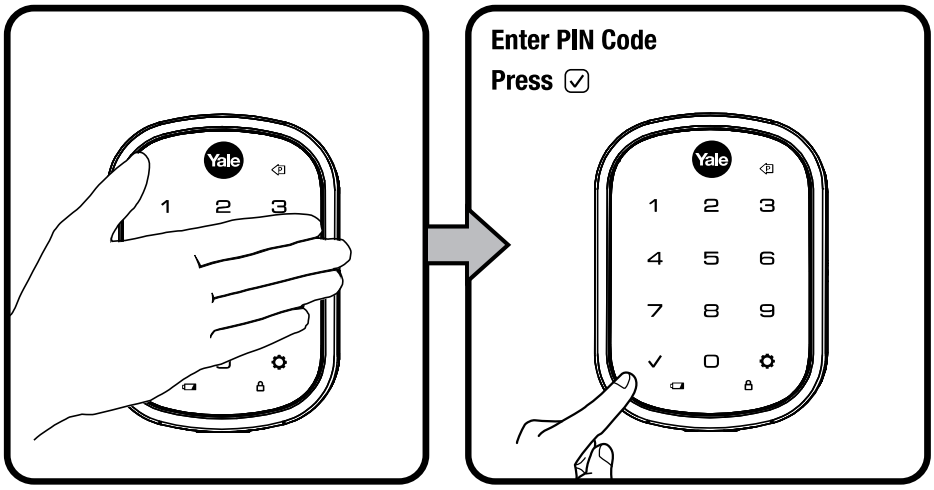

Code Chart Duplicate if necessary

PIN Code Management (With Network Module - Up to 250 Users)		
User Type	User Name	PIN Code
Master		
User		
User		
User		
User		
User		
User		
User		
User		
User		
User		
User		
User		
User		
User		
User		

Resetting Lock to Factory Default

When resetting the lock, all user codes, including the Master PIN code*, are deleted. All programming features are reset to original default settings (see below).

1. Remove the battery cover and batteries.
2. Remove the interior lock to access the reset button hole. (See image at right.)
3. Re-insert 3 batteries and insert a small screwdriver into the hole; holding the reset button for 3 seconds.
4. While still holding the reset button, insert the 4th battery and hold the reset button for an additional 3 seconds.
5. Release the reset button.
6. Re-install the interior lock onto the door.

Upon reset, Master PIN Code creation is the only option available and must be performed prior to any other programming of the lock.

For best results, the lock should be installed on the door when resetting the lock to factory default. If the process was done and the lock was not installed on the door, review the Re-Handing instructions listed in Hardware Troubleshooting.

Interior Lock (4" Shown)

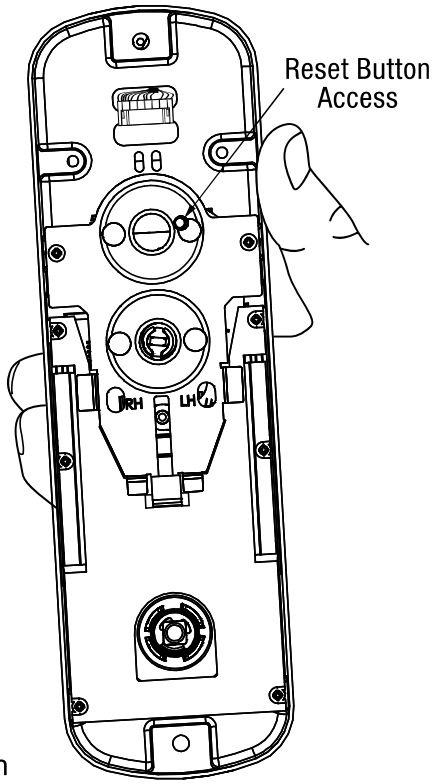

Factory Settings

Settings	Factory Setting
Master PIN Code	Registration ***required****
Automatic Re-lock	Disabled
Inside Indicator Light	Disabled (Off)
One Touch Locking	Enabled
Privacy Button Setting	Disabled
Volume Setting	Enabled (Low)
Language Setting	English
Lockout Mode	Disabled
Wrong Code Entry Limit	5 Times
Shutdown Time	60 Seconds

*The Master PIN code must be registered prior to any other programming of the lock.

Definitions

All Code Lockout Mode: This feature is enabled by the Master code. When enabled, it restricts all user (except Master) PIN code access. When attempting to enter a code while the unit is in Lockout, the RED locked padlock will appear on the screen.

Automatic Re-lock Time: After a successful unlock, the unit will re-lock automatically after duration selected in the **Advanced Lock Settings** (Main Menu selection #3).

Handing the Lock: Lock handing refers to which direction the bolt comes out of the door (right or left). If the lock was programmed off the door, the lock may need adjusting. Review Handing the Lock instructions and/or Re-Handing instructions listed in Hardware Troubleshooting.

Inside Indicator Light: Located on the interior escutcheon. Shows active status (Locked) of lock and can be enabled or disabled in the **Advanced Lock Settings** (Main Menu selection #3).

Language Setting Mode: Choosing English (1), Spanish (2) or French (3) becomes the (default) setting for the lock's voice prompts.

Low Battery: When battery power is low, the Low Battery Warning indicator flashes RED. If battery power is completely lost, use the 9Volt battery override. To use the 9V battery override apply 9V battery, in either direction, to terminals below the touchscreen for backup power option. Wake up the lock and enter your pin code to unlock the door.

Master PIN Code: The Master PIN code is used for programming and for feature settings. **It must be created prior to programming the lock.** The Master code will also operate (unlock/lock) the lock.

Network Module Setting: With the optional Network Module installed, this setting becomes available thru the Main Menu (7) and allows the lock to connect with a network controller.

One Touch Locking: When the latch is retracted, activating the keypad will extend the latch (during Automatic Re-lock duration or when Automatic Re-lock is disabled). When One-Touch Re-lock is **not** in use **(disabled),** any valid PIN code will re-lock the lock.

Previous: While in Menu Mode, pressing this icon cancels the current operation and returns the user to the previous step.

Privacy Mode: Privacy mode is disabled by default. Enable Privacy mode by pressing the privacy button for 4 seconds to put lock in do-not-disturb mode (all pin codes are disabled).

Shutdown Time: The unit will shutdown (flashing RED) for sixty (60) seconds and not allow operation after the wrong code entry limit (5 attempts) has been met.

Tamper Alert: Audible alarm sounds if attempting to forcibly remove outside lock from door.

User PIN Code: The user code operates the lock. The maximum number of user codes with Z-Wave Plus or Zigbee network module is 250; without network module or with iM1 network module, maximum is 25; with Bluetooth, maximum is 12. Note: When deleting user pin code(s), screen will display user pin code being deleted.

Volume Setting Mode: The volume setting for PIN code verification is set to **Low (2)** by default; otherwise it can be set to **High (1)** or **Silent (3)** for quiet areas.

Wrong Code Entry Limit: After five (5) unsuccessful attempts at entering a valid PIN code, the unit will shut down and not allow operation for sixty (60) seconds.

Feature Programming Through Menu Mode Using Master PIN code*

1. Touch screen with back of hand or palm to activate.
2. Enter 4-8 digit master PIN code* followed by key.
   Lock Response: "Menu mode, enter number, press key to continue."
3. Enter digit corresponding to the function to be performed followed by the key. Follow the voice commands.

***The Master PIN code must be registered prior to any other programming of the lock.**
Note: After Master PIN code is entered, lock will automatically hand itself. For best results, lock should be installed on door during this process. If this process was done and lock was not installed on door, review the Re-Handing instructions listed in Hardware Troubleshooting.

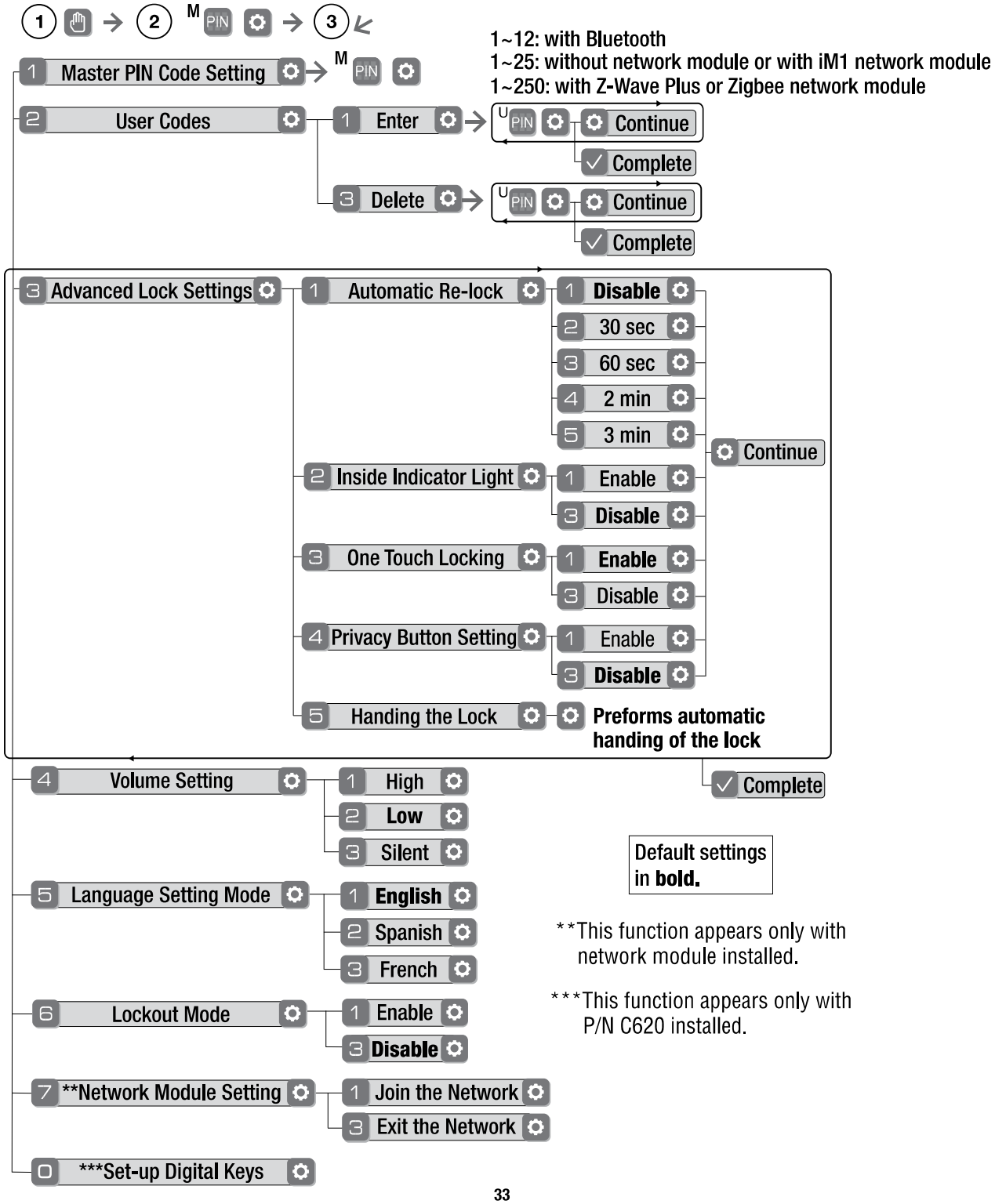

Programming Troubleshooting

Symptom	Suggested Action
Lock does not respond – door is open and accessible.	• Touchscreen becomes active when pressed w/whole hand. Use a larger area of the hand or fingers and verify contact with at least 3 areas. • If touchscreen numbers are visible, check to see if they respond when pressed. • Check batteries are installed and oriented correctly (polarity) in the battery case. • Check batteries are in good condition; replace batteries* if discharged. • Check to see if touchscreen harness is fully connected and not pinched.
Lock does not respond – door is locked and inaccessible.	• Batteries may be completely discharged. • Use mechanical key to gain entry and replace batteries*.
Unit is on for a while then shows no reaction. Lights dim.	• Batteries do not have enough power. Replace batteries*.
Unit chimes to indicate code acceptance, but the door will not open.	• Check the door gaps for any foreign objects between door and frame. • Check that the wire harness is firmly connected to the PCB.
Unit operates to allow access, but will not automatically re-lock.	• Check to see if Auto Re-lock Mode is enabled. • Disable Auto Re-lock Mode to lock the door (automatically). • If low battery indicator is lit (see below), change batteries*.
PIN codes will not register.	• PIN codes must consist of 4 to 8 digits to register. • The same PIN code cannot be used for multiple users. • Registration/management of PIN codes is set by the authority of the Master Code, which is set first. • Contact the Master user. • User codes must be entered within 5 seconds (while touchscreen is active) or process will have to be restarted. • Check ✓ or gear ⚙ cannot be used as part of the PIN code.
Upon entering a PIN code and pressing ✓ key, the unit displays "invalid code" error or lock times out without responding.	• Lockout Mode is enabled. • Only the Master can enable/disable Lockout Mode. • Contact the Master user.
Upon entering a PIN code and pressing the ✓ key, the red padlock icon appears and there are different tones.	• Check to see if the lock is set to Lockout Mode. • Setting/managing Lockout Mode is done through Master Code only. Contact the Master user.
The unit operates, but it makes no sound.	• Check to see if Silent Mode is enabled (see Feature #4).
The unit responds "Low Battery"	• This is the alert to replace the batteries. Replace all four (4) batteries* with new AA Alkaline batteries.
Upon entering a PIN code and pressing the ✓ key, the unit responds "Wrong number of digits".	• The digits entered were incorrect or incomplete. Re-enter the correct code followed by the check ✓ key.

* When batteries are replaced, Network Module locks have a real time clock that will be set through the User Interface (UI); it is recommended to verify correct date and time particularly those locks operating under Daylight Saving Time (DST).

FCC:

Class B Equipment

This equipment has been tested and found to comply with the limits for a Class B digital device, pursuant to Part 15 of the FCC Rules. These limits are designed to provide reasonable protection against harmful interference in a residential installation. This equipment generates, uses, and can radiate radio frequency energy and, if not installed and used in accordance with the instructions, may cause harmful interference to radio communications. However, there is no guarantee that interference will not occur in a particular installation. If this equipment does cause harmful Interference to radio or television reception, which can be determined by turning the equipment off and on, the user is encouraged to try to correct the interference by one or more of the following measures:

- Reorient or relocate the receiving antenna.
- Increase the separation between the equipment and receiver.
- Connect the equipment into an outlet on a circuit different from that to which the receiver is connected.
- Consult the dealer or an experienced radio/TV technician for help.

Warning: Changes or modifications to this device, not expressly approved by **ASSA ABLOY Residential Group** could void the user's authority to operate the equipment.

Industry Canada:

This Class A digital apparatus meets all requirements of the Canadian Interference Causing Equipment Regulations.

Cet appareillage numérique de la classe A répond à toutes les exigences de l'interférence canadienne causant des règlements d'équipement.

Yale Locks & Hardware

Product Support Tel 1-855-213-5841 • www.yalehome.com

Yale® ,Yale Real Living® and Assure Lock® are registered trademarks of ASSA ABLOY Residential Group. Other products' brand names may be trademarks or registered trademarks of their respective owners and are mentioned for reference purposes only. © Copyright 2019. All rights reserved. Reproduction in whole or in part without the express written permission of ASSA ABLOY Residential Group is prohibited.

ASSA ABLOY

The global leader in door opening solutions

Yale Locks

Z-Wave Plus ™ v2 System Integrators Guide

Yale Assure Electronic Deadbolts

YRD216-ZW3, YRD226-ZW3, YRD256-ZW3,
YRC216-ZW3, YRC226-ZW3, YRC256-ZW3,
YRD652-ZW3, NF-YRD622-ZW3, NF-YRD612-ZW3,
YRC652-ZW3, NF-YRC622-ZW3, NF-YRC612-ZW3,
YRD622-ZW3, YRD642-ZW3, YRC622-ZW3, YRC642-ZW3,
YRD410-ZW3, YRD420-ZW3, YRD430-ZW3, YRD450-ZW3

Document Revision: 1.9

November 2022

Contents

Revision History 4
Yale Z-Wave Plus ™ Product Info 5
Network Operations 5
Enroll/Add device to network (SmartStart) 5
Enroll/Add device to network (Classic Inclusion Mode) for Assure Lock [YRC/D216/226/256/622/642/652, NF-YRC/D612/622] 5
Enroll/Add device to network (Classic Inclusion Mode) for Assure 2 Lock [YRD410/420/430/450] 6
Un-enroll/Remove device from network (Exclusion Mode) 6
Factory Reset 6
Supported Command Classes 7
Command Class Z-Wave Plus ™ Info, Version 2 7
Command Class Manufacturer Specific, Version 2* 7
Command Class Security, Version 1 9
Command Class Security 2, Version 1 9
Command Class Device Reset Locally, Version 1* 9
Command Class Power Level, Version 1* 10
Command Class Version, Version 3* 10
Command Class Battery, Version 1* 11
Command Class Door Lock, Version 4* 12
Command Class Door Lock Logging, Version 1* 12
Command Class Schedule Entry Lock, Version 3* 12
Command Class User Code, Version 2* 12
Command Class Time Parameters, Version 1* 16
Command Class Time, Version 2 16
Command Class Firmware Update Meta Data, Version 5* 17
Command Class Association, Version 2* 18
Command Class Multi Channel Association, Version 3* 18
Command Class Association Group Info, Version 3* 19
Command Class Notification, Version 8* 21
Command Class Configuration, Version 4* 25

Command Class Application Status, Version 1 28
Command Class Transport Service, Version 2 28
Command Class Supervision, Version 1 28
Command Class Indicator, Version 3* 28
Command Class Basic, Version 2* 29

* This command class requires security.

Revision History

Rev.	Details
1.0	Initial Release
1.1	Made the following updates: • Added Command Class Clock section. • Added Clock Report to the Association Group Info commands list. • Marked Time as a secure command class. • Added the following note to Time, Time Parameters, and Clock command classes: "If the controller does not support either the Time CC, Time Parameters CC, or Clock CC, then scheduled users will not have access." • Added a brief description of the time syncing mechanism to the Command Class Time section. • Changed Master Code slot from 0xFB to 0x00 in Notifications Table.
1.2	Made the following updates: • Marked the Version command class as secure. • Added Basic command class. • Added information about non-access user codes to the User Code command class section.
1.3	Updated the Product ID description in the "Command Class Manufacturer Specific" section.
1.4	Made the following updates: • Added interconnected locks: YRC216, YRC226, YRC256 • Added configuration parameter 28 (expiration time) to the Configurable Parameters table.
1.5	Made the following updates: • Provided Version Report example • Add mapping of Basic CC to Door Lock CC • Updated CC descriptions that required security • Updating Configuration Parameter Table • Fixed the Max Nodes for Association • Add information on how our Lock uses the Indicator feature • Add information how to trigger unsolicited AGI Lifeline reports • Add description of OTA internal step • Updated User Code User ID Status Values from CC v1 vs v2 • Removed support for Clock CC
1.6	• Added NF-YRD612, NF-YRD622, NF-YRC612, NF-YRC622 and YRC652 • Added SmartStart feature statement
1.7	• Added YRD622, YRD642, YRC622 and YRC642 • Expectations from User Code Set/Get vs Extended User Code Set/Get Commands
1.8	• Added YRD410/420/430/450
1.9	• Added BLE Alarms from BLE locks

Yale Z-Wave Plus ™ Product Info

Manufacturer ID: ASSA ABLOY (0x0129)

Z-Wave™ Device Type: Door Lock Keypad

Z-Wave™ Role Type: Listening Sleeping Slave (LSS)

Network Operations

Enroll/Add device to network (SmartStart)

SmartStart enabled products can be added into a Z-Wave™ network by scanning the Z-Wave™ QR Code present on the product with a controller providing SmartStart inclusion. No further action is required and the SmartStart product will be added automatically within 10 minutes of being switched on in the network vicinity.

- Open the Z-Wave™ system's smart home app via smartphone or tablet and follow the in-app prompts to add a new device.
- SmartStart works when the Z-Wave™ system has the DSK saved and one of the following are true:
  - The lock has the minimum Lock firmware version AND is in a factory-reset state:
    - YRC/D216/226/256: v4.4.00
    - YRC/D652: v2.1.07
    - NF-YRC/D622: v2.1.11
    - NF-YRC/D612: v2.2.4
    - YRC/D622/642: v3.2.44
    - YRD410/420/430/450: v1.2.204
  - An internal key has already been established.

Enroll/Add device to network (Classic Inclusion Mode) for Assure Lock [YRC/D216/226/256/622/642/652, NF-YRC/D612/622]

- Enter the 4–8-digit Master PIN code followed by the ⚙ key.
- Press the 7 key followed by the ⚙ key.
- Press the 1 key followed by the ⚙ key.
- Scan the QR code, if prompted, or…
- Enter the first five (5) digits of the DSK if prompted.

Enroll/Add device to network (Classic Inclusion Mode) for Assure 2 Lock [YRD410/420/430/450]

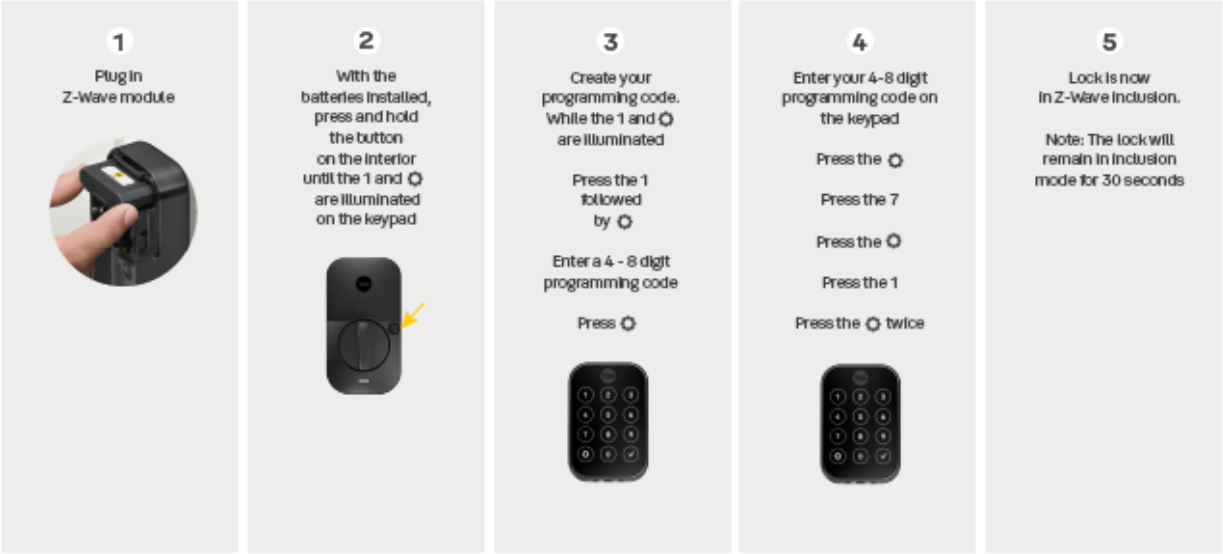

Un-enroll/Remove device from network (Exclusion Mode)

- Enter the 4–8-digit Master PIN code followed by the ⚙ key.
- Press the 7 key followed by the ⚙ key.
- Press the 3 key followed by the ⚙ key.

When the Yale lock is unenrolled/excluded from the network through the device menu mode, any changes previously made to the user code database and configuration settings will be retained, as opposed to set back to defaults.

Factory Reset

- Factory resetting the lock with the Z-Wave™ module installed will clear the Z-Wave™ network settings, causing the device to be removed from the network.
- The following is the method of performing a factory reset:
    1. Manual factory reset, via power cycle while holding button on inside lock escutcheon
        - See the Lock Installation Manual for details.
        - Please use the manual factory reset procedure only when the network primary controller is missing or otherwise inoperable.

Supported Command Classes

The Yale Assure Z-Wave Plus ™ deadbolts follow the Z-Wave™ Command Class Specifications for all command classes that are implemented. Please refer to these specifications for specifics on how each command class works. The supported command classes are listed below, and certain sections contain details about operations that may be specific to the Yale lock. If a section is blank, then please refer to the Z-Wave™ specifications.

As a secure device, most of the command classes supported by the lock are required to be sent securely with Z-Wave™ security. During enrollment, the controller can use the Security Command Class to get this list directly from the lock. If a command class requires security, it is also indicated as such below.

Specification used: Z-Wave™ Specifications Release Dec 2021 BCD

Command Class Z-Wave Plus ™ Info, Version 2

The Z-Wave Plus ™Info command class reports the following information:

- Role Type: Slave Sleeping Listening (0x07)
- Node Type: Z-Wave Plus ™ Node (0x00)
- Installer Icon Type: 0x0300
- User Icon Type: 0x0300

Command Class Manufacturer Specific, Version 2*

* This command class requires security.

The Manufacturer Specific command class reports the following information:

- Manufacturer ID: 0x0129
  - This is the manufacturer ID assigned to ASSA ABLOY.
- Product ID:
  - The Product ID can be used to differentiate between hardware platforms, as well as between ZW2 and ZW3. See Table 1 - First 2 Digits of Product ID, below, for details.
  - Product IDs for the locks covered in this document are as follows:
    - 0x4600 for older version of Yale Residential Deadbolt Lock
    - 0x46D1 for YRD216-ZW3 (Keyed Push Button Deadbolt)
    - 0x46D2 for YRD226-ZW3 (Keyed Touch Screen Deadbolt)
    - 0x46D5 for YRD256-ZW3 (Keyless Touch Screen Deadbolt)
    - 0x46C1 for YRC216-ZW3 (Interconnected Push Button Deadbolt)

- 0x46C2 for YRC226-ZW3 (Interconnected Keyed Touch Screen Deadbolt)
- 0x46C5 for YRC256-ZW3 (Interconnected Keyless Touch Screen Deadbolt)
- 0x4DD5 for YRD652-ZW3 (2nd Generation Keyless Touch Screen Deadbolt)
- 0x4DD2 for NF-YRD622-ZW3 (2nd Generation Keyed Touch Screen Deadbolt)
- 0x4DD1 for NF-YRD612-ZW3 (2nd Generation Keyed Push Button Deadbolt)
- 0x4DC5 for YRC652-ZW3 (2nd Generation Interconnected Keyless Touch Screen Deadbolt)
- 0x4DC2 for NF-YRC622-ZW3 (2nd Generation Interconnected Keyed Touch Screen Deadbolt)
- 0x4DC1 for NF-YRC612-ZW3 (2nd Generation Interconnected Keyed Push Button Deadbolt)
- 0x52D2 for YRD622-ZW3 (2nd Generation Fire Rated Keyed Touch Screen Deadbolt)
- 0x52D4 for YRD642-ZW3 (2nd Generation Fire Rated Keyless Touch Screen Deadbolt)
- 0x52C2 for YRC622-ZW3 (2nd Generation Fire Rated Keyed Interconnected Touch Screen Deadbolt)
- 0x52C4 for YRC642-ZW3 (2nd Generation Fire Rated Keyless Interconnected Touch Screen Deadbolt)
- 0x45D1 for YRD410-ZW3 (2nd Generation Assure Keyed Push Button Deadbolt)
- 0x45D2 for YRD420-ZW3 (2nd Generation Assure Keyed Touch Screen Deadbolt)
- 0x45D3 for YRD430-ZW3 (2nd Generation Assure Keyless Push Button Deadbolt)
- 0x45D5 for YRD450-ZW3 (2nd Generation Assure Keyless Touch Screen Deadbolt)
-

- Product Type ID:
  - 0x8004 for YRD216-ZW3 & YRCD216-ZW3 (Push Button Deadbolt)
  - 0x8002 for YRD226-ZW3, YRC226-ZW3, YRD256-ZW3, & YRC256-ZW3 (Touch Screen Deadbolt)
  - 0x8109 for YRD652-ZW3, YRC652-ZW3, NF-YRD622-ZW3, & NF-YRC622-ZW3 (2nd Generation Touch Screen Deadbolt)
  - 0x810A for NF-YRD612-ZW3 & NF-YRC612-ZW3 (2nd Generation Push Button Deadbolt)

- 0x8103 for YRC/D622-ZW3 & YRC/D642-ZW3 (2nd Generation Fire Rated Touch Screen Deadbolt)
- 0x8104 for YRD410-ZW3, YRD420-ZW3, YRD430-ZW3 & YRD450-ZW3 (2nd Generation Assure Deadbolt)

Table 1 - First 2 Digits of Product ID

	Z-Wave™ Type			**Platform**					**Hex Value**
[0x8004/0x8002]-ZW2	0	0	0	0	0	1	1	0	***0x06***
[0x8004/0x8002]-ZW3	0	1	0	0	0	1	1	0	***0x46***
[0x8109/0x810A]-ZW2	0	0	0	0	1	1	0	1	***0x0D***
[0x8109/0x810A]-ZW3	0	1	0	0	1	1	0	1	***0x4D***
[0x8103]-ZW2	0	0	0	1	0	0	1	0	**0x12**
[0x8103]-ZW3	0	1	0	1	0	0	1	0	**0x52**
[0x8104]-ZW2	0	0	0	0	0	1	0	1	***0x05***
[0x8104]-ZW3	0	1	0	0	0	1	0	1	***0x45***

Command Class Security, Version 1

This command class has been implemented per the Z-Wave™ Specification.

Command Class Security 2, Version 1

This command class has been implemented per the Z-Wave™ Specification.

Command Class Device Reset Locally, Version 1*

* This command class requires security.

The Yale door locks covered in this guide can be reset to their factory default settings by manually resetting the lock or by BLE command via app for BLE locks (by following the procedure outlined in the specific lock's manual).

Upon factory reset, all Z-Wave™ network settings are cleared, all the user codes are erased from the lock (including the master code), and all configurable settings are reset to default values, except for the language setting. A factory reset leaves the lock in a completely unsecure state (waiting for master code to be set), so care should be taken if using the configuration parameter to perform a remote reset. However, if the DUT is unenrolled/excluded from the network through the device menu mode, then the user code database and configuration settings will not be reset to the defaults.

Command Class Power Level, Version 1*

* This command class requires security.

This command class has been implemented per the Z-Wave™ Specification.

The Power Level command class was implemented to allow controllers to set the transmit power for the door lock. This could be useful in large networks with many nodes, so that the lock can find working routes back to the controller while transmitting at a lower power. This ensures robust routes when the normal transmit power level is restored.

Currently there is no way to initiate a low power enrollment; this command class can only be used once the lock is enrolled successfully.

Command Class Version, Version 3*

* This command class requires security.

The Yale Real Living locks are a multi-processor system with 1 additional firmware target. All processors can be updated through the Firmware Update Meta Data command class. The firmware targets are numbered as follows:

- Firmware Target 0 = Z-Wave™ Chip
- Firmware Target 1 = Lock Processor

To identify the firmware version for each target, the hex data in the firmware version report must be converted to decimal prior to combining major and minor version into the full version.

After a controller sends a Version Get command the log will display the Version Report similar to the below:

```
Send VERSION_GET to node 16 started
Send VERSION_GET to node 16 completed in 00:00:01.242
Rx [S2_ACCESS] VERSION_REPORT(86 12) + 03 07 10 02 22 02 01 2C 00
```

The above Version Report will be defined as this in the Z-Wave™ sniffer tool, Zniffer:

Command Class Version ver.3

Version Report

Z-Wave Library Type:	0x03
Z-Wave Protocol Version:	0x07
Z-Wave Protocol Sub Version:	0x10
Firmware 0 Version:	0x02
Firmware 0 Sub Version:	0x22
Hardware Version:	0x02
Number of firmware targets:	0x01
vg 1:	2C 00
Firmware Version:	0x2C
Firmware Sub Version:	0x00

For Firmware Target 0, the Firmware 0 Version (0x02) and Sub version (0x22) translate to module firmware decimal value of "2.34".

For Firmware Target 1 (the data under vg1), Firmware Version (0x2C) and Sub version (0x00) translate to lock firmware decimal value of "4.3.00".

Command Class Battery, Version 1*

* This command class requires security.

Per the Z-Wave Plus ™ Specification, the lock will send a Battery Report with a value of 0xFF to the Lifeline node when a critical battery level is reached (starting at about 3.8V for Product Type IDs 0x8002 & 0x8004 and starting at about 4.2V for Product Type ID 0x8109, 0x810A, 0x8103 & 0x8104). In addition, the Yale Locks provide 2 earlier low battery alarms through the notification command class (see Table 7 - Notification Table).

Low battery alarms will be generated if the lock is in a low battery state during one of the following events: any motor activation (keypad lock/unlock, RF lock/unlock, etc.), controller sends Get Battery command, or the unsolicited battery report was triggered. Yale locks will generate an unsolicited Battery Report every 8 hours if a node is listed in the Lifeline Group.

Command Class Door Lock, Version 4*

* This command class requires security.

Yale Z-Wave Plus ™ locks support three door lock modes: Door Secured (0xFF), Door Unsecured (0x00), and Door Unsecured with timeout (0x01). When Auto Relock is enabled, the lock will automatically relock after all unlock events. Yale Z-Wave Plus ™ locks do not support any of the "Door Unsecured for outside Door Handles" (0x20, 0x21) or "Door Unsecured for inside Door Handles" (0x10, 0x11) modes.

Command Class Door Lock Logging, Version 1*

* This command class requires security.

This command class has been implemented per the Z-Wave™ Specification.

Command Class Schedule Entry Lock, Version 3*

* This command class requires security.

Yale locks support Year Day Schedule types and Daily Repeating Schedule types. Yale locks allow the controller to apply multiple schedules to a single user. Each user has 1 Year Day Schedule slot (Slot ID 1) and 7 Daily Repeating slots (Slot IDs 1 – 7). If user scheduling is used in the lock, then the controller **MUST** set the lock's time using the Time Parameters command class.

Command Class User Code, Version 2*

* This command class requires security.

Versions 1 and 2 of this command class can address user code slots 1 through 250 via the User Code Set/Get/Report commands. Version 2 of this command class also includes extended versions of each of these commands, used to address the extended range of users.

Table 2 – Expected Reports for Set/Get Commands

Command	Slots 1-250	Slot 251	Slots 252-254	Slot 255	Slots 256-500
User Code CC v1/v2: User Code Get	User Code Report	User Code Report	User Code Report	User Code Report	N/A
User Code CC v1/v2: User Code Set	User Code Report	Master Code Report	User Code Report	User Code Report	N/A
User Code CC v2: Extended User Code Get	Extended User Code Report	Extended User Code Report	Extended User Code Report	Extended User Code Report	Extended User Code Report
User Code CC v2: Extended User Code Set	Extended User Code Report	Extended User Code Report	Extended User Code Report	Extended User Code Report	Extended User Code Report

The master code can be accessed (read/write) using slot 251 (0xFB), if using version 1 of this command class. For version 2, the Master Code Set/Get/Report commands must be used.

Yale locks do not support bulk commands (setting or getting multiple user codes at once) or CRC functionality for this command class.

It should be noted that the lock's operation mode (called "User Code Keypad Mode" in this command class) can be modified through Version 2 of this command class, or through parameter 8 of the Configuration command class. This is the only parameter that can be modified through more than one command class.

The following implementation notes apply specifically to non-access user codes:

- The usage of non-access users has changed slightly with ZW3, compared to ZW2, but is still backwards compatible. If a User Code Set is transmitted using version 1 of the command class, then the lock will accept a value of 0x04 as the status for the non-access user.
- Previously, a value of 0x04 was reserved for setting non-Access users, as stated above. When using version 2 of this command class, a non-Access (now called "Messaging") user ID status is assigned a value of 0x03. This value of 0x03 should be used with the Extended User Code Set command.
- A non-access user can be identical to a "normal" PIN code, aside from the fact that it does *not* grant access.
- Any available user code slot (except the master code) can be used to store a non-access user code.
- Schedules can be applied to non-access users.

Yale locks support the following User ID Status values:

Table 3 - User ID Status User Code CC v1 vs v2

User ID Status	**User Code CC v1 Set**	**User Code CC v1 Report Value**
Description	*Value*	*Value*
Available	0x00	0x00
Enabled / Grant Access	0x01	0x01
Disabled	0x02	0x03
	0x03	
Messaging: The user code is accepted, but the lock does not grant access to the user. Instead, it generates an alarm to the Lifeline and does NOT take preventative actions for further attempts to enter the User ID and/or User Code.	0x04	0x04
One-Time Use: This PIN is disabled immediately after being used for a successful unlock operation.	0x06	0x06
Expiring: This PIN is disabled once a specified amount of time has passed after being used for a successful unlock operation. The expiration time is set through the Configuration command class.	0x07	0x07

User ID Status	User Code CC v2: Extended User Code Set	User Code CC v2: Extended User Code Report Value
Description	*Value*	*Value*
Available	0x00	0x00
Enabled / Grant Access	0x01	0x01
Disabled	0x02	0x02
Messaging: The user code is accepted, but the lock does not grant access to the user. Instead, it generates an alarm to the Lifeline and does NOT take preventative actions for further attempts to enter the User ID and/or User Code.	0x03	0x03
One-Time Use: This PIN is disabled immediately after being used for a successful unlock operation.	0x06	0x06
Expiring: This PIN is disabled once a specified amount of time has passed after being used for a successful unlock operation. The expiration time is set through the Configuration command class.	0x07	0x07

Command Class Time Parameters, Version 1*

* This command class requires security.

The controller must set the Time Parameters in the lock anytime the lock loses power. If the time is not set by the controller, then user codes with schedules applied to them cannot be granted access. When the lock is powered up, it will generate a Notification Report to indicate to the controller that power has been applied (Alarm V1 Type = 0x82, Alarm V1 Level = 0x00, Event Type = 0x08, Event Value = 0x01). This indicates to the controller that the lock no longer has a valid time set.

If the controller does not support either the Time CC or Time Parameters CC, then scheduled users will not have access.

Command Class Time, Version 2

The controller must set the Time Parameters in the lock anytime the lock loses power. Even though the Time CC is not secure, the Time Set command must be issued at the same or higher security level as when the device was enrolled in order for time to be set otherwise it will be rejected by the device. If the time is not set by the controller, then user codes with schedules applied to them cannot be granted access. When the lock is powered up, it will generate a Notification Report to indicate to the controller that power has been applied (Alarm V1 Type = 0x82, Alarm V1 Level = 0x00, Event Type = 0x08, Event Value = 0x01). This indicates to the controller that the lock no longer has a valid time set.

If the controller does not support either the Time CC or Time Parameters CC, then scheduled users will not have access. A time sync should occur every 8 hours, starting with the Time CC. If there is no response within a minute, the next step is to issue a Time Parameters Get to sync time.

Command Class Firmware Update Meta Data, Version 5*

* This command class requires security.

Yale Z-Wave Plus ™ locks support over-the-air (OTA) upgrading of 2 firmware targets:

1. Firmware Target 0: Z-Wave™ chip
2. Firmware Target 1: The lock main processor

Firmware Target 0 is used to determine the correct Z-Wave™ processor image to download. ID 1 is always 0xA5, to signal this is an ASSA ABLOY Z-Wave™ image, and ID 2 is specific to the region, with the lower nibble being 0x0 and the upper nibble being the value in Table 4 - Region-Specific Values for Firmware ID 0. Eventually the lower nibble will be used to separate builds within a specific region, but this will also be 0 for now, since there is only a single build of firmware.

Table 4 - Region-Specific Values for Firmware ID 0 (Upper Nibble)

Region	Value
ANZ	0x1
CN	0x2
EU	0x3
HK	0x4
IL	0x5
IN	0x6
JP	0x7
KR	0x8
RU	0x9
US	0xA

Firmware 1 target will depend on which version of the lock is in use (mapped to the Product Type ID).

- For YRC/D216-ZW3 (Push Button interface), Firmware 1 ID = 0x8004.
- For YRC/D226-ZW3 & YRC/D256-ZW3 (Touch Screen interface), Firmware 1 ID = 0x8002.
- For YRC/D652-ZW3 & NF-YRC/D622-ZW3 (2nd Generation Touch Screen interface), Firmware 1 ID = 0x8109.
- For NF-YRC/D612-ZW3 (2nd Generation Push Button interface), Firmware 1 ID = 0x810A.
- For YRC/D622-ZW3 & YRC/D642-ZW3 (2nd Generation Fire Rated Touch Screen Deadbolt), Firmware 1 ID = 0x8103
- For YRD410-ZW3, YRD420-ZW3, YRD430-ZW3 & YRD450-ZW3 (2nd Generation Assure Deadbolt), Firmware 1 ID = 0x8104

After an OTA is performed (a Firmware Update Status Report should return with successful), there is an additional step internally where we write/apply the image to the lock/module. When the image is being applied to the lock, the lock is unresponsive until completion of the apply image. Once the completion of the OTA image is applied the lock silently reboots.

The following is the time it takes for each product to complete OTA image apply phase:

- For Z-Wave™ Radio Chip, ~10 seconds
- For YRC/D216-ZW3 (Push Button interface), ~ 3 minutes
- For YRC/D226-ZW3 and YRC/D256-ZW3 (Touch Screen interface), ~ 3 minutes
- For YRC/D652-ZW3 & NF-YRC/D622-ZW3 (2nd Generation Touch Screen interface), ~ 13 minutes
- For NF-YRC/D612-ZW3 (2nd Generation Push Button interface), ~ 13 minutes
- For YRC/D622-ZW3 & YRC/D642-ZW3 (2nd Generation Fire Rated Touch Screen Deadbolt), ~23 minutes
- For YRD410-ZW3, YRD420-ZW3, YRD430-ZW3 & YRD450-ZW3 (2nd Generation Assure Deadbolt), ~23 minutes (full image) ~3 minutes (patch/differential image)

Command Class Association, Version 2*

* This command class requires security.

This command class has been implemented per the Z-Wave™ Specification.

Command Class Multi Channel Association, Version 3*

* This command class requires security.

This command class has been implemented per the Z-Wave™ Specification.

Yale locks support only one group, which can contain up to 5 nodes.

Command Class Association Group Info, Version 3*

* Command Class Requires Security

Yale locks support the Lifeline Association Group.

Table 5 - Association Table

Group ID	Maximum Nodes	Description	Commands

1	5	Lifeline	• Command_Class Battery
			  ○ Battery_Report
			• Command_Class_Configuration
			  ○ Configuration_Report
			• Command_Class_Notification
			  ○ Notification_Report
			• Command_Class_Door_Lock
			  ○ Door_Lock_Operation_Report
			  ○ Door Lock Configuration Report
			• Command_Class_Device_Reset_Locally
			  ○ Device_Reset_Locally_Notification
			• Command_Class_User_Code
			  ○ User Code Report
			  ○ Extended User Code Report
			  ○ User Code Keypad Mode Report
			  ○ Master Code Report

The following are the actions to trigger the reports:

Table 6 – Lifeline Report Trigger Table

Report Command	**RF Trigger**	**Manual Trigger**
Battery Report	Any RF Lock Operation when lock is under the battery thresholds	Any manual/keypad Lock Operation when lock is under the battery thresholds or Power Cycle Lock
Configuration Report	Configuration Set	Change Lock Settings via Keypad
Notification Report (Access Control)	Any RF Lock Operation	Manual or Keypad Unlock/Lock
Notification Report (Power Management)	Any RF Lock Operation when lock is under the battery thresholds	Any manual/keypad Lock Operation when lock is under the battery thresholds or Power Cycle Lock
Door Lock Operation Report		Manual or Keypad Unlock/Lock
Door Lock Configuration Report	Door Lock Configuration Set	Enable/Disable Auto-Relock Feature via Keypad
Device Reset Locally Notification		HW Factory Reset
User Code Report	Add/Delete User Code via User Code Set Command	Add/Delete User Code via Keypad from Slots 1-250
Extended User Code Report	Add/Delete User Code via Extended User Code Set Command	Add/Delete User Code via Keypad from Slots 251-500
User Code Keypad Mode Report	User Code Keypad Mode Set	Enable/Disable Vacation Mode or Privacy Mode (refer to Installation Manual)
Master Code Report	Master Code Set	Update/Modify Master Code via Keypad

Command Class Notification, Version 8*

* This command class requires security.

Table 7 - Notification Table

Alarm Reports	Alarm type	Alarm Level	Description	Notification Type	Event
Deadbolt Jammed	0x09	0x01	Deadbolt jammed while locking	0x06	0x0B
		0x02	Deadbolt jammed while unlocking	0x06	0x0B
Keypad Lock	0x12	0x (01 - max users)	Where Alarm level represents user slot number	0x06	0x05
Keypad Unlock	0x13	0x(01-max users)	Where Alarm level represents user slot number (0x00 = Master Code)	0x06	0X06
Manual Lock	0x15	0x01	by key cylinder or inside thumb-turn	0x06	0x01
		0x02	by touch function (lock and leave)	0x06	0x01
		0x03	By inside button	0x06	0x01

Manual Unlock	0x16	0x01	By key cylinder or inside thumb turn	0x06	0x02
RF Operate Lock	0x18	0x01	by RF module	0x06	0x03
RF Operate Unlock	0x19	0x01	by RF module	0x06	0X04
Auto Lock Operate Locked	0x1B	0x01	Auto re-lock cycle complete, locked.	0x06	0x09
User deleted	0x21	0x(01-max users)	User was deleted. Alarm level = user slot number	0x06	0X0D (single) 0X0C (all)
Door State	0x23	0x00	Door is open	0x06	0x16
		0x01	Door is closed	0x06	0x17
Non-Access	0x26	0x(01-max users)	A Non-Access Code was entered at the lock. Where alarm level represents user slot number	0x06	0xFE
Daily Repeating Schedule Set/Erased	0x60	0x(01-max users)	Schedule(s) has been set/erased for specified user ID	0x06	0xFE
Year Day Schedule Set/Erased	0x62	0x(01-max users)	Schedule(s) has been set/erased for specified user ID	0x06	0xFE

All Schedule Types Enabled/Disabled	0x65	0x(01-max users)	Schedule(s) has been enable/disabled for specified user ID	0x06	0xFE
Master Code changed	0x70	0x00	Master code was changed at keypad	0x06	0x12
		0x00	Master code was changed over RF	0x06	0x0E
User added		0x(01-max users)	User added. Alarm level = user slot number	0x06	0X0E
Duplicate Pin-code error	0x71	0x (01-max users)	Where Alarm level represents user slot number Alarm generated in response to add user RF cmd. This alarm is not generated when attempting to add duplicate pin at the keypad. The lock simply denies it and plays the “Denied”. Trying to duplicate the master code will result in a 0x71 0x00 alarm report.	0x06	0x0F
Disabled user entered at keypad	0x83	0x(01-max users)	A disabled user pin code was entered at the keypad	0x06	0xFE
Valid user but outside of schedule	0x84	0x(01-max users)	A valid user can be both a normal user and a Non-Access user. If a non-access user is out of schedule this alarm will be sent instead of the non-access alarm.	0x06	0xFE
Tamper Alarm	0xA1	0x01	keypad attempts exceed code entry limit	0x06	0X10
		0x02	front escutcheon removed from main	0x06	0xFE
Battery is fully charged	0x80	0x05	After a low battery alert was observed, the lock was powered down and powered back up with full battery.	0x08	0x0D

Door Lock needs Time set	0x82	0x00	Power to the lock was restored and the locks RTC was cleared. The controller should set the time to ensure proper logging.	0x08	0x01
Low Battery Alarms*	0xA7	0x(Current %)	***Low Battery*** Starting at 4.0V **(0x8002 & 0x8004)**; 4.6V **(0x8109, 0x810A, 0x8103 & 0x8104)**	0x08	0x0A
	0xA8	0x(Current %)	***Critical Battery Level*** Starting at 3.9V **(0x8002 & 0x8004)**; 4.4V **(0x8109, 0x810A, 0x8103 & 0x8104)**	0x08	0x0B
Integrated BLE Lock**	0xE2	0x00	Integrated BLE Lock	0x06	0x03
		0x01	Integrated BLE Auto Relock	0x06	0x09
Integrated BLE Unlock**	0xE3	0x00	Integrated BLE Unlock	0x06	0X04
		0x01	Integrated BLE Auto Unlock	0x06	0X04
Homekit BLE Lock**	0xE4	0x00	Integrated Homekit BLE Lock	0x06	0x03
Homekit BLE Unlock**	0xE5	0x00	Integrated Homekit BLE Unlock	0x06	0X04

*The Yale lock also supports a 3rd low battery alarm: too low to operate. This alarm is sent out as a Battery Report (with value = 0xFF) through the Battery Command Class. This is the last low battery alarm level before the product stops functioning. Starting at 3.8V (0x8002 & 0x8004); 4.2V (0x8109 ,0x810A, 0x8103 & 0x8104)

**Only supported by YRD410/420/430/450

Command Class Configuration, Version 4*

* This command class requires security.

Table 8 - Configurable Parameters

Param. Num.	Name	Length	Configuration Properties			Info	Length of Info String (max length allowed is 90)
			Min	Max	Default		
1	Volume	1 byte	0x01 (High Volume)	0x03 (Silent)	0x02 (Low Volume) **[0x8002, 0x8109, 0x8103]**	Set Volume Level to high (1), low (2), or silent (3). **[0x8002, 0x8109, 0x8103 & 0x8104]**	53
					0x01 (High Volume) **[0x810A, 0x8004 & 0x8104]**	Set Volume Level to high (1) or silent (3). **[0x810A & 0x8004]**	44
2	Auto Relock	1 byte	0x00 (Disable)	0xFF (Enable)	0x00 (Disable)	Set Auto Relock feature to enable or disable.	45
3	Relock time	1 byte	0x0A (10 seconds)	0xB4 (180 seconds)	0x1E (30 seconds)	Adjust the time your lock will auto relock.	43

4	Wrong Code Entry Limit	1 byte	0x03	0x0A	0x05	Adjust the limit for wrong code entries allowed by your lock**.**	61
5	Language*	1 byte	0x01 (English)	0x03 (French)	0x01 (English)	Set the language to English (1), Spanish (2), or French (3).	60
7	Shut down time	1 byte	0x0A (10 seconds)	0x84 (132 seconds)	0x3C (60 seconds)	Adjust the time your lock is shut down after reaching its wrong code entry limit.	81
8	Operating mode	1 byte	0x00 (Normal Mode)	0x02 (Privacy Mode) **[0x8002, 0x8004, 0x8109 & 0x810A]**	0x00 (Normal Mode)	Set the Operating Mode to normal mode(0), vacation mode(1), privacy mode(2). **[0x8002, 0x8004, 0x8109 & 0x810A]**	75
						Set the Operating Mode to normal mode, keypad disable mode or passage mode. **[0x8104]**	76
				0x03 (Passage Mode) **[0x8103 & 0x8104]**		Set the Operating Mode to normal mode, vacation mode, privacy mode or passage mode. **[0x8103]**	83

11	One Touch Locking	1 byte	0x00 (Disable)	0xFF (Enable)	0xFF (Enable)	Set One Touch Locking feature to enable or disable.	51
12	Privacy Button	1 byte	0x00 (Disable)	0xFF (Enable)	0x00 (Disable)	Set Privacy Button feature to enable or disable.	48
13	Lock Status LED	1 byte	0x00 (Disable)	0xFF (Enable)	0x00 (Disable)	Set Lock Status LED feature to enable or disable.	49
16	Escape Return Mode**	1 byte	0x00 (Disable)	0xFF (Enable)	0x00 (Disable)	Enable or Disable Escape Return Mode	36
21	Eco Mode On/Off**	1 byte	0x00 (Disable)	0xFF (Enable)	0x00 (Disable)	Enable or Disable Eco Mode feature	34
28	Expiring Pin Code Enabled Time	1 byte	0x00 (Disable)	0xFF (127 Hours)	0x00 (Disable)	Timeout value used to determine time after first entry is triggered.	68

*Only supported by YRC/D226/256/652/622/642 & NF-YRC/D622
** Only supported by YRC/D622/642

Command Class Application Status, Version 1

This command class has been implemented per the Z-Wave™ Specification.

Command Class Transport Service, Version 2

This command class has been implemented per the Z-Wave™ Specification.

Command Class Supervision, Version 1

This command class has been implemented per the Z-Wave™ Specification.

Command Class Indicator, Version 3*

* This command class requires security.

The indicator feature is set by using Indicator ID 0x50 to identify the node and Property ID 0x02 or 0x03, 0x04 and 0x05.

Table 9 – Lock UI for Indicator Set Overview

Indicator Set	Lock Exterior	Lock Interior
OFF	Keypad LED is OFF	Inside LED OFF
ON	YRC/D226/256/652/622/642, NF-YRC/D622 & YRD410/420/430/450: Numbers 0-9 on Touch Screen Flash YRC/D216 & NF-YRC/D612: All buttons Flash	Inside LED Flashes

In order to set the Indicator ID 0x50 with Property 0x02, set values to 0x00 for off and 0x01…0x63 or 0xFF for on.

In order to properly set the Indicator ID 0x50 with Properties 0x03, 0x04 and 0x05, we had to map the values to our lock's specific blink rate.

Table 10 – Minimum Values for Indicator Set Property IDs 0x03, 0x04, & 0x05 to trigger Lock UI

Property ID 0x03 (On/Off Periods) Fixed Value	Property ID 0x04 (On/Off Cycles) Minimum Value	Property ID 0x05 (On time within an On/Off period) Fixed Value
0x14*	0x00...0xFF (per Z-Wave™ Spec)	0x0A*

NOTE: If Property IDs 0x03 and 0x05 are set to value other than the above, then the lock will blink at the different number of cycles than what you have set.

Command Class Basic, Version 2*

* This command class requires security.

This command class is mapped to Door Lock CC:

Table 11 – Basic Mapping Overview

Basic Command	Door Lock Mapped Command
Basic Set (Value)	Door Lock Operation Set (Door Lock Mode)
Basic Report (Current Value = 0x00)	Door Lock Operation Report (Door Lock Mode = 0x00)
Basic Report (Current Value = 0xFF)	Door Lock Operation Report (Door Lock Mode > 0x00)

The Basic Get Current Value, Basic Get Duration, and Basic Get Target Value are mapped to Door Lock Operation Get and Basic Set is directly mapped to Door Lock Operation Set where the Duration is returned as is, but the Value and Target Door Lock State Value of the Basic Report use the following mapping:

Table 12 – Basic Report: Value

Value	Level	State	Door Lock State
0 (0x00)	0%	Off	Unsecure
1..99 (0x01...0x63)	1..100%	On	Secure
100..253 (0x64...0xFD)	Reserved	Reserved	
254 (0xFE)	Unknown	Unknown	Unknown
255 (0xFF)	100%	On	Secure