CHERUBINI
tocco italiano dal 1947

Z-WAVE PLUS

META
WIRED MOTOR CONTROLLER 7

Actuator for motors with standard connection

EN

CE

ISTRUZIONI - INSTRUCTIONS - EINSTELLANLEITUNGEN
INSTRUCTIONS - INSTRUCCIONES

Index:

Device description ..... p. 4
Technical specifications ..... p. 5
Safety information ..... p. 5
Electrical connections diagram ..... p. 6
Device installation ..... p. 7
LED status indicator ..... p. 7
Add/remove the device into a Z-Wave™ network (classic) ..... p. 8
SmartStart inclusion ..... p. 9
S2 Secure Inclusion ..... p. 9
Supported command classes ..... p. 10-11
Device control ..... p. 12
Controlling the device by External Switches ..... p. 12
Controlling the device by a Z-Wave™ controller ..... p. 13
Associations ..... p. 14
Reset to the factory settings ..... p. 15
Firmware update ..... p. 15
Offline setup mode ..... p. 16
Configurations ..... p. 17-21

EU declaration of conformity

CHERUBINI S.p.A. declares that the product is in conformity with the relevant Union harmonisation legislation: Directive 2014/53/EU, Directive 2011/65/EU.
The full text of the EU declaration of conformity is available upon request at the following website: www.cherubini.it.

Failure to comply with these instructions annuls CHERUBINI's responsibilities and guarantee.

The crossed-out wheelie bin symbol indicates that the product must be collected separately from other waste at the end of its useful life. Therefore, users should deliver this product to appropriate waste collection points or return it to their dealers at the end of its service life. See your local authority's regulations. Adequate waste sorting for subsequent processing and environmentally compatible disposal helps to avoid possible negative effects on the environment and public health and promotes reuse and/or recycling of the materials used to make the equipment.

ENGLISH

DEVICE DESCRIPTION

META Wired Motor Controller 7 is an "in wall device", for the multilevel control of roller shutter motors. It can accurately control the opening and closing of blinds, curtains, shutters, venetian blinds as requested by the user through local commands or remotely using computers, smartphones, tablets. At the same time, it is completely configurable so that it can adapt to the most varied customers' needs, while being ready for use without needing additional configurations in order to operate. After an initial calibration procedure, thanks to a proprietary algorithm, the device is able to identify the exact position of the roller shutter without using external sensors. During the operation, a continuous and automatic control of the limit switches allows maintaining the calibration. In the absence of a power source, the system runs a self-repositioning procedure that restores calibration. The device is equipped with contact protection technology (Zero Crossing) which reduces the electrical stress on the relay contacts and ensures a longer life. The open / closed switching of the device always occur when the instantaneous value of voltage is 0. It operates in any Z-Wave™ network with other Z-Wave™/Z-Wave Plus™ certified devices and controllers from any other manufacturer. As a constantly powered node, the device will act as repeater regardless of the vendor in order to increase the reliability of the network. This device is a security enabled Z-Wave Plus™ product that is able to use encrypted Z-Wave Plus™ messages to communicate to other security enabled Z-Wave Plus™ products. This device must be used in conjunction with a Security Enabled Z-Wave™ Controller in order to fully utilize all implemented functions.

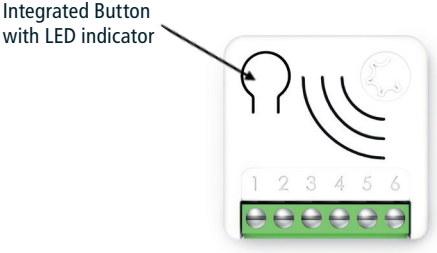

Integrated Button	1 or 3 clicks to enter in Learn Mode 6 clicks to reset the system to manufacturer's settings 2 clicks to enter in setup mode
Power Supply	1 – Null 6 – Line
Open/Close Buttons	2, 3
Motor Contacts	4, 5

TECHNICAL SPECIFICATIONS

Power supply	110 - 230 VAC ± 10% 50/60 Hz
Maximum Load	1200 Watt
System temperature limitation	105 °C
Work temperature	From -10° to 40° C
Power consumption	< 230 mW in standby mode < 500 mW when motor is moving
Radio frequency	868.4 MHz
Protection system	S2 Security
Maximum distance	Up to 100 m outdoor Up to 40 m indoor
Dimensions	37x37x17 mm
Actuator element	Relay
Compliance	CE, RoHs
Electrical IP Rating	IP20

ENGLISH

SAFETY INFORMATION

INFO: The device is designed to be installed in flush mounting junction boxes or close to the motor to be controlled.

WARNING: The device must be installed by electricians qualified to intervene on electrical systems in compliance with safety requirements set out by the regulations in force.

DANGER: The device must be connected with a voltage of 230 VAC, before carrying out any operation, please make sure the power main switch is in OFF position.

DANGER: Any procedure requiring the use of the Integrated Button is related only to the installation phase and is to be considered a service procedure that must be performed by qualified personnel. This operation must be performed with all necessary precautions for operating in areas with a single level of insulation.

WARNING: Do not connect loads that exceed the maximum load permitted by the actuator element.

WARNING: All connections must be performed according to the electrical diagrams provided.

WARNING: The device must be installed in norm-compliant systems suitably protected from overloads and short circuits.

ELECTRICAL CONNECTIONS DIAGRAM

The device must be supplied by 230 AC Power Supply.
Connections must be done following one of the diagrams below:

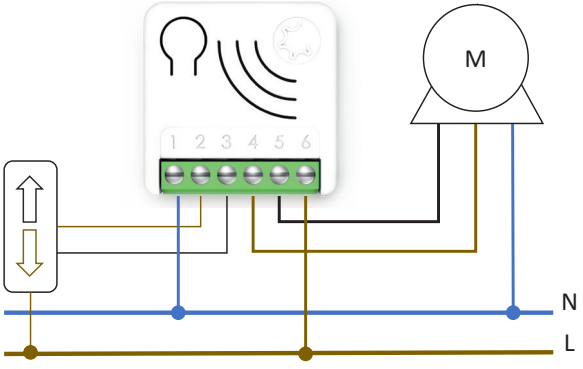

1) Neutral; 6) Phase; 4, 5) Motor terminals; 2, 3) Commands switch

Power Supply	1 – Null 6 – Line
Commands Switch	2, 3
Motor terminals	4, 5

WARNING: The power line must be opportunely protected from short-circuits and excess load due to a potential motor malfunction.

DEVICE INSTALLATION

1) Make sure the main switch is set to the OFF position
2) Connect the device based on the diagrams provided
3) Turn the main switch to the ON position
4) If necessary, calibrate the motor limit switches (see motor manufacturer's manual)
5) Include the device in the Z-Wave™ network

TIP: The antenna must not be shortened, removed or modified. To ensure maximum efficiency, it must be installed as shown. Large size metal equipment near the antenna can negatively affect reception. Each device is a node in a mesh network. If there are metal obstacles, the obstacle can often be overcome with a further triangulation node.

ENGLISH

LED STATUS INDICATOR

The system includes an RGB LED that shows the device's status during installation:
Solid RED: the device is not included in any network
Solid BLUE: the device is Offline setup mode
Blink BLUE: calibration
4 GREEN blinks then OFF: the device has been just added to a Z-Wave™ network in S2 Authenticate Mode
4 BLUE blinks then OFF: the device has been just added to a Z-Wave™ network in S2 Unauthenticated Mode
4 RED blinks then OFF: the device has been just added to a Z-Wave™ network without security
Sequence of GREEN-BLUE Learn Mode for inclusion
Sequence of RED-BLUE Learn Mode for exclusion
Rapid sequence of **GREEN-BLUE-RED:** the event on the input (external switch) is not valid.

TIP: To test if the electrical connections are correct, before the inclusion of the device, while pressing **n** times the external switch, the RGB LED should flash **green** for the same amount of times. If it does not, check the wire connections.

ADD/REMOVE THE DEVICE INTO A Z-WAVE™ NETWORK *(classic)*

ENGLISH

Standard Inclusion (add)

All META Serie 7 devices are compatible with all Z-Wave™/Z-Wave Plus™ certified controllers. The devices support both the ***Network Wide Inclusion*** mechanism (which offers the ability to be included in a network, even if the device is not directly connected to the controller) and ***Normal Inclusion***.

By default, the inclusion procedure starts in ***Normal Inclusion*** mode and after a short timeout the procedure continues in ***Network Wide Inclusion*** mode that lasts for about 20 Seconds.

Only a controller can add the device into the network. After activating the inclusion function by the controller, the device can be added by setting it in ***Learn Mode***.

Before including the device, the LED status indicator is solid RED. The adding of a device is executed by activating the adding procedure in the inclusion section of the controller interface and then executing 1 or 3 click on the integrated button (the device is set in ***Learn Mode***). As soon as the inclusion procedure initiates the LED indicator starts a sequence of GREEN-BLUE blinks. The device is included in the network when the LED status is OFF and the interview is completed.

Standard exclusion (remove)

Only a controller can remove the device from the network. After activating the exclusion function by the controller, the device can be removed by setting it in ***Learn Mode***.

The procedure of exclusion can be activated by **Removing** a node from the Z-Wave™ network and executing 1 or 3 click on the integrated button; as soon as the exclusion initiates, the LED indicator starts a sequence of RED-BLUE blinks. The device is excluded from the network when the LED status indicator is solid RED and the App_status in the interface is OK.

SMARTSTART INCLUSION

Z-Wave™ SmartStart aims to shift the tasks related to inclusion of an end device into a Z-Wave™ network away from the end device itself, and towards the more user-friendly interface of the gateway.
Z-Wave™ SmartStart removes the need for initiating the end device to start inclusion. Inclusion is initiated automatically on power-ON and repeated at dynamic intervals for as long as the device is not included into a Z-Wave™ network. As the new device announces itself on power-ON, the protocol will provide notifications, and the gateway can initiate the inclusion process in the background, without the need for user interaction or any interruption of normal operation. The SmartStart inclusion process only includes authenticated devices.
META Serie 7 devices can be added into a Z-Wave™ network by scanning the Z-Wave™ QR Code present on the product with a controller providing SmartStart inclusion. No further action is required and the SmartStart product will be added automatically within 10 minutes of being switched on in the network vicinity.

The SmartStart QR and the full DSK string code can be found on the back of the device. The PIN is the first group of 5 digits printed underlined. If you plan to use the DSK, it is important that you take a picture of the label and keep it in a safe place.

S2 SECURE INCLUSION

When adding META Serie 7 devices to a Z-Wave™ network with a controller supporting Security 2 Authenticated (S2), the PIN code of the Z-Wave™ Device Specific Key (DSK) is required. The unique DSK code is printed on the product label. The first five digits of the key are highlighted and underlined to help the user identify the PIN code.

ENGLISH

SUPPORTED COMMAND CLASSES

Command Class	Version	Non-Secure CC	Secure CC
BASIC	2		x
ZWAVEPLUS_INFO	2	x	
ASSOCIATION	2		x
MULTI_CHANNEL_ASSOCIATION	3		x
ASSOCIATION_GRP_INFO	3		x
TRANSPORT_SERVICE	2	x	
VERSION	3		x
MANUFACTURER_SPECIFIC	2		x
DEVICE_RESET_LOCALLY	1		x
INDICATOR	3		x
POWERLEVEL	1		x
SECURITY_2	1	x	
SUPERVISION	1	x	
FIRMWARE_UPDATE_MD	5		x
APPLICATION_STATUS	1	x	
CONFIGURATION_V4	4		x
SWITCH_MULTILEVEL	4		x
WINDOW_COVERING	1		x

Supporting Command Class Basic

The basic command classes are mapped into the Switch Multilevel Command Class.

Basic Command received	Mapped Command (multilevel Switch)
Basic Set (0xFF)	Multilevel Switch (0xFF)
Basic Set (0x00)	Multilevel Switch (0x00)
Basic Set (1, 0x63)	Multilevel Switch (1, 0x63)
Basic GET	Basic Report (Current Value, Target Value, Duration) Current Value and Target Value MUST be set to 0xFE if not position aware

ENGLISH

Supporting Command Class Indicator

The device supports the Command Class Indicator V3 (ID 0x50). When the device receives an indicator set, the led blinks accordingly to the Indicator set received.

The color shown by the indicator will be:
RED: if the device is included without Security
BLUE: if the device is included in S2 Unauthenticated Mode
GREEN: if the device is already included in S2 Authenticated Mode.

DEVICE CONTROL

META Wired Motor Controller 7 is an "in wall device", for the multilevel control of roller shutter motors. It can accurately control the opening and closing of blinds, curtains, shutters, venetian blinds by using an external switch, or from remote through a controller.

Controlling the device by External Switches

For the operation of the device within the Z-Wave™ network and controlling the loads connected to the device, control actions are performed on the external switches.

The **CONTROL ACTIONS** are **EVENTS** executed on **EXTERNAL SWITCHES** connected to the UP and DOWN terminal of the device which can be *Clicks, Hold Down and Up*.

Event	Type of switch	Actions on the switch
Click	Double command button: UP/DOWN, open/close, ON/OFF	Press briefly & Release *(when pressed it autonomously returns to the initial position)*
MultiClick=**n** click		Sequence of consecutive **n** clicks
Hold Down		Press longer than click. *After a Hold Down always follows an UP event.*
Up		Release. *The event applies only if there has been a previous Hold Down event.*

Device status: ON/OFF/STOP, Open/Close/Stop refers to the fact that the motor is rotating towards the direction Open/Close or it is stopped.

Result of Control Actions

- Holding down the UP/DOWN button makes the motor move in the relevant direction and stops it as soon as the button is released (Up event) or the shutter reaches its limit switch.
- A click ordering an UP/DOWN movement while the motor is moving in opposite direction, will stop the motor.
- A click ordering an UP/DOWN movement while the motor is moving in the same direction, will be ignored.
- A single click on the UP/DOWN button makes the motor move until it reaches the limit switch for UP/DOWN position.
- A double click on the UP/DOWN button makes the motor move until it reaches the favorite position set for the UP/DOWN position.

Controlling the device by a Z-Wave™ controller

The device can be controlled by any Z-Wave™ / Z-Wave Plus™ certified controller available in the market.

In the figure below, are represented a couple of examples of control panel interfaces that show how the device will appear once included into the Gateway.

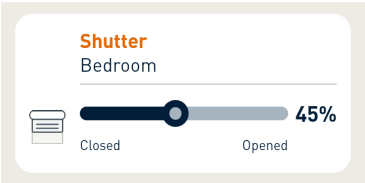

By moving the cursor in the scrollbar is possible to regulate the opening level of the shutter.

ENGLISH

ASSOCIATIONS

META Wired Motor Controller 7 can control other devices like other relays or dimmers. The device supports 3 association group, which supports the association of up to 8 devices (nodes):

Group ID	Group Name	N° of max nodes supported in the group	Description	Command sent
1	Lifeline	**8**	Lifeline Group. Nodes belonging to this group will receive: notifications about device reset; changes related to the shutter status and Indicator Status.	DEVICE_RESET_LOCALLY_ NOTIFICATION WIDOM COVERING REPORT MULTILEVEL REPORT INDICATOR_REPORT
2	Follow me	**8**	Nodes belonging to this group will receive basic Set Command with the same level reached by the device.	BASIC SET
3	Control by switch	**8**	Nodes belonging to this group will be controlled by the events on the switch, and the movement of the controlled device will be in sync with the controller device.	WINDOW_COVERING_SET, WINDOW_COVERING_ STOP_LEVEL_CHANGE

INFO: Association ensures direct transfer of control commands between devices and is performed without participation of the main controller.

RESET TO THE FACTORY SETTINGS

The device can be reset to the original factory with 6 consecutive clicks on the integrated button.

After the reset is completed, the device will reboot and a RED solid led is showed.
Please use this procedure only when the network primary controller is missing or otherwise inoperable.

INFO: If the reset is performed while the device is still part of a network, it notifies the other devices that it has been removed ***(Device Reset Locally Notification).***

FIRMWARE UPDATE

The system supports over-the-air firmware updates that do not require the device to be removed from its location. The firmware update can be activated from all certified controllers supporting version 2 of the Firmware Update function.

WARNING: The system will be rebooted at the end of the firmware update procedure. It is advisable to carry out the firmware update procedure only when necessary and following careful planning of the intervention.

OFFLINE SETUP MODE

The device has a unique feature that allows to configure some parameters without using any user interface. This feature enables the professional user to setup the main features of the device in the field even if the device is not included in a Z-Wave™ Network. When the device will be included in the network all these configuration parameters will be maintained.

To enter in offline setup mode, operate 2 clicks on the integrated button.

When the device is in Offline setup mode the led becomes solid Blue and the following configurations are permitted:

1 click	Invert the movement of the motor. Equivalent to set parameter n. 61 to 1.
2 clicks	Reset calibration. Equivalent to set parameter n. 20 to 0.
3 clicks	This configuration will apply only if the calibration is completed. Set "ON-OFF favorite Level". The current level will be set as ON_FAVORITE_LEVEL if the current level is greater than 49 or will be set to OFF_FAVORITE_LEVEL if the current level is smaller than 50. If you want to set both ON and Off favorite Level you have to carry on this setup two times: One time for the ON position by moving the motor in the chosen ON_FAVORITE_LEVEL; and a second time for the chosen OFF_FAVORITE_LEVEL.
4 clicks	Set the current level as 50% of the opening range.
After receiving the command the led blinks a number of times equal to the number of clicks recognized.	
6 clicks	Exit from Offline setup mode and return to normal operation.
Hold down for 5 seconds	Reset all configuration parameters to their default value and return to normal operation.

After entering in Offline setup mode, the device returns to normal operation if no action on the switch is detected for more than 20 Seconds.

CONFIGURATIONS

Favorite positions

The system can set two favorite positions: one for the upward movements (opening movements) **Favorite level for ON position**, the other for the downward movements (closing movements) **Favorite level for OFF position**.

Parameter Number	Size	Parameter Name	Default Value	Description
2	1	ON_ FAVORITE_ LEVEL	80	The On level reached when the Up Button received a double click.
Parameters Values			**Min: 50**	**Max: 99**
Value	**Description**			
50-99	50-99% opening level (99% correspond to completely open)			

Parameter Number	Size	Parameter Name	Default Value	Description
3	1	ON_ FAVORITE_ LEVEL	20	The Off level reached when the Down Button received a double click.
Parameters Values			**Min: 0**	**Max: 49**
Value	**Description**			
0-49	0-49% opening level (0 correspond to completely closed)			

Calibration

Defines the status of the calibration procedure. By default, the calibration starts in automatic mode as soon as a movement command has been set by external switch or by Z-Wave™ network.
Afterwards the calibration can be done again by setting this parameter to 20 to 0 or using the offline setup mode.
The calibration procedure can be made manually by setting the time needed to complete a full movement from complete close to complete open and vice versa. The procedure can be carried on by setting parameter 20 to 1 and parameter 21 and 22, to the appropriate time in millisecond.
During the calibration, the LED indicator blinks repeatedly in BLUE.

Parameter Number	Size	Parameter Name	Default Value	Description
20	1	CALIBRA-TION_COM-PLETE	0	Define if the device has been calibrated.
Parameters Values			**Min: 0**	**Max: 1**
Value	**Description**			
0	TO_BE_DONE (Calibration to be done)			
1	DONE (Calibration has been done)			

Parameter Number	Size	Parameter Name	Default Value	Description
21	4	MAX_ LEVEL_ TIME	100	Time to reach Max level starting from the Min Level. Defines the time in thousandth of a second necessary to reach the complete open position starting from complete close position.
Parameters Values			**Min: 100**	**Max: 100.000**
Value	**Description**			
100-100.000	Time expressed in thousandths of a second			

Parameter Number	Size	Parameter Name	Default Value	Description
22	4	MIN_ LEVEL_ TIME	100	Time to reach Min level starting from the Max Level. Defines the time thousandth of a second necessary to reach the complete close position starting from complete open position.
Parameters Values			Min: 100	Max: 100.000
Value	Description			
100-100.000	Time expressed in thousandths of a second			

Parameter Number	Size	Parameter Name	Default Value	Description
23	4	INVERTION_ TIMEOUT	500	Time in thousandth of a second after which the movement direction can be changed.
Parameters Values			Min: 500	Max: 3.000
Value	Description			
500-3.000	Time expressed in thousandths of a second			

Parameter Number	Size	Parameter Name	Default Value	Description
24	4	LIMIT_ SWITCH_ TIMEOUT	2500	Time in thousandth of a second for recognizing that the limit switch has been reached.
Parameters Values			Min: 1000	Max: 5.000
Value	Description			
1000-5.000	Time expressed in thousandths of a second			

Parameter Number	Size	Parameter Name	Default Value	Description
25	1	FINE_ CALIBRA-TION	100	Adjustment in Percentage value of the 50% level position after the initial calibration. Increasing/decreasing of this value will move the 50% level in the UP direction/Down direction,
Parameters Values			Min: 50	Max: 150
Value	Description			
50-150	Expressed in percentage			

ENGLISH

Report Configuration

Parameter Number	Size	Parameter Name	Default Value	Description
37	1	REPORT_ FREQUENCY	5	Time in seconds after which the new position report is sent if the target position is not reached. When the target position has been reached a final position report is sent.
Parameters Values			Min: 1	Max: 100
Value	Description			
1-100	Time expressed in second			

Other parameters

Parameter Number	Size	Parameter Name	Default Value	Description
61	1	INVERT_ MOVEMENT	0	Movement inversion. If after the calibration, the movement of the motor is opposite to the command issue (goes up, if it is required to go down and vice versa) the movement can be inverted. This parameter can be set also using the offline setup mode.
Parameters Values			Min: 0	Max: 1
Value	Description			
0	NOT_INVERTED			
1	INVERTED			

ENGLISH

Rev: 1 07/2022 - Cod: A4516_6P50

CHERUBINI S.p.A.
Via Adige 55
25081 Bedizzole (BS) - Italy
Tel. +39 030 6872.039 | Fax +39 030 6872.040
info@cherubini.it | www.cherubini.it

CHERUBINI Iberia S.L.
Avda. Unión Europea 11-H
Apdo. 283 - P. I. El Castillo
03630 Sax Alicante - Spain
Tel. +34 (0) 966 967 504 | Fax +34 (0) 966 967 505
info@cherubini.es | www.cherubini.es

CHERUBINI France S.a.r.l.
ZI Du Mas Barbet
165 Impasse Ampère
30600 Vauvert - France
Tél. +33 (0) 466 77 88 58 | Fax +33 (0) 466 77 92 32
info@cherubini.fr | www.cherubini.fr

CHERUBINI Deutschland GmbH
Siemensstrasse, 40 - 53121 Bonn - Deutschland
Tel. +49 (0) 228 962 976 34 / 35 | Fax +49 (0) 228 962 976 36
info@cherubini-group.de | www.cherubini-group.de