Thank you for purchasing the URC LT-3300 Dimmer/Switch!

This quick setup manual will help you plan and install your Z-Wave™ lighting solution. This product can be operated in any Z-Wave network with other Z-Wave certified devices from other manufacturers. All mains operated nodes within the network will act as repeaters regardless of vendor to increase reliability of the network. Each module is designed to act as a repeater, which will re-transmit a radio frequency (RF) signal by routing the signal around obstacles and radio dead spots to ensure that the signal is received at its intended destination. The LT-3300 is a security enabled Z-Wave Plus™ device. A security enabled Z-Wave Plus controller must be used in order to fully utilize the product.

Specifications

Power:
120V AC / 60Hz

Selectable Operation:
Switch (On/Off) or Dimmer

Signal (Frequency):
908.42 Mhz

Operating Temperature Range:
32-95 °F (0-35 °C)

Maximum Load:
600W Single-Gang, 500W Double-Gang, 400W Triple-Gang Incandescent, 300W LED (all installations), 150W CFL (all installations)

Approval:
UL Listed / FCC / IC / Z-Wave Plus™ Certified / CAN ICES-003 (B) / MB-003(B)

For indoor use. Specifications subject to change without notice due to continuing product improvement.

Z-Wave Network

Z-Wave can be used with a few devices or it can be used to build a large network. In the first example below, a user has a Gateway which is looking for Z-Wave devices within its radius. Z-Wave devices outside this radius will not be found and need to either be moved within the radius or use a repeating device to reach it. The second example (page 3) shows how a repeater can be used to reach a device outside of the initial radius. Keep this in mind when building your own network and make sure to use the range estimator on page 3.

Example 1 - Original Z-Wave Range
In this example, Switch 2 is out of range because the signal from the Gateway would only reach part of the dining room.

GATEWAY Your Z-Wave Enabled Gateway
1 URC Switch 1
2 URC Switch 2

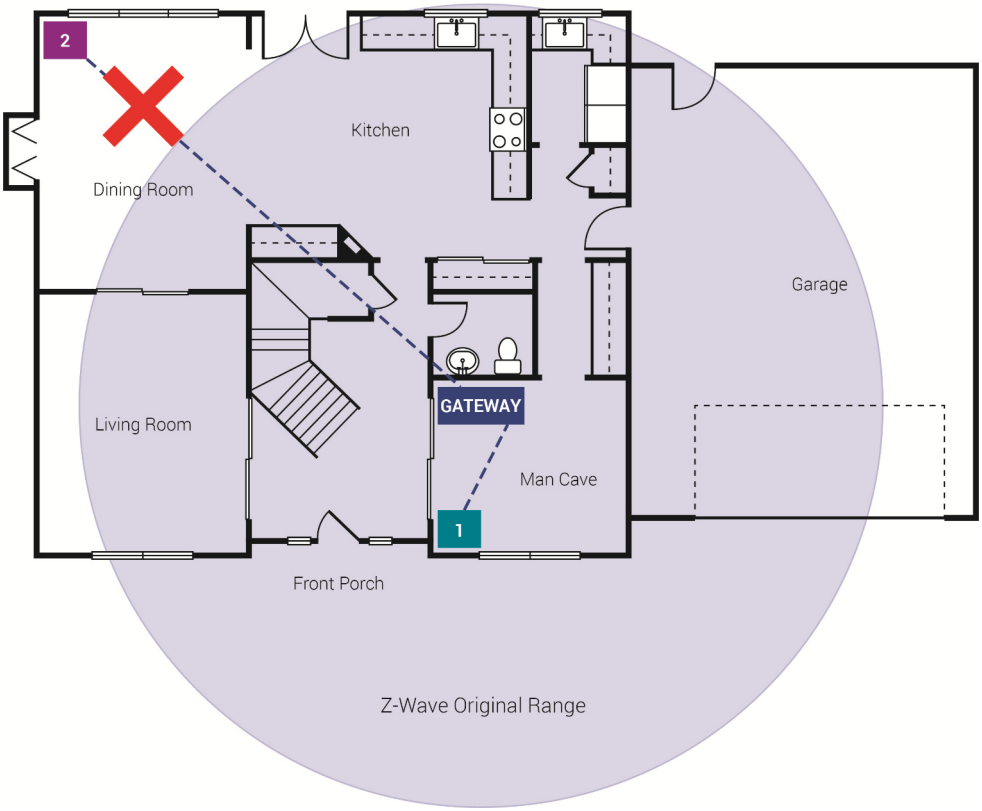

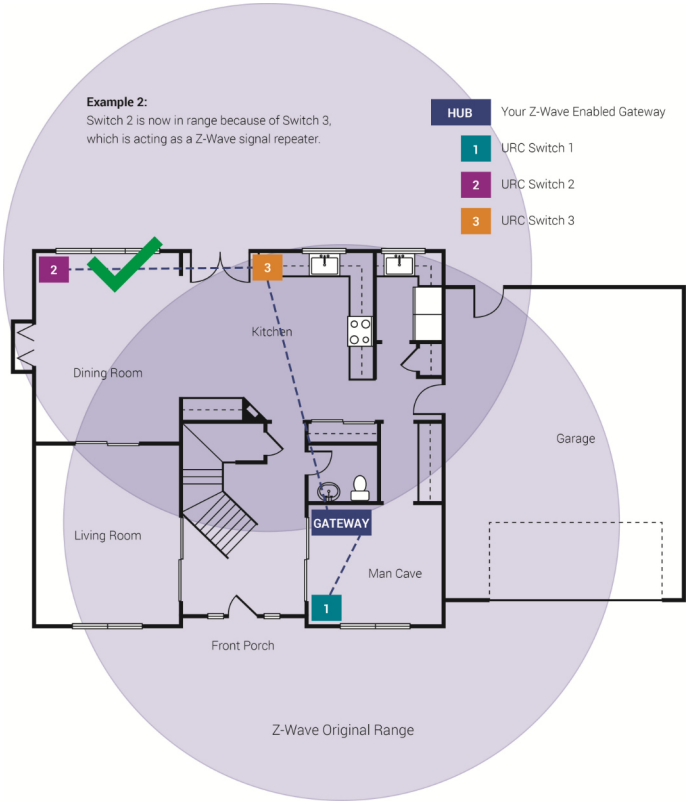

Material	Thickness	Signal Loss
Aerated Concrete Stone	< 30cm // 11.8”	20%
Aluminum Coating	< 1mm // 0.04”	100%
Ceiling	< 30cm // 11.8”	70%
Furniture [Non-wood]	< 30cm // 11.8”	40-60%
Glass [No Metal Coating]	< 5cm // 2.0”	10%
Inner Wall	< 30cm // 11.8”	40%
Iron Reinforced Concrete	< 30cm // 11.8”	30-90%
Metal Grid	< 1mm // 0.04”	90%
Outer Wall	< 30cm // 11.8”	60%
Plaster	< 10cm // 3.9”	10%
Pumice	< 30cm // 11.8”	10%
Red Brick	< 30cm // 11.8”	35%
Stone	< 30cm // 11.8”	30%
Wood	< 30cm // 11.8”	40-60%

NOTE: Z-Wave range will never be a perfect circle due to walls, furniture, etc. The above is for reference only.

Wiring Instructions

Please **do not try installing this device if you are unsure of how electrical circuits operate** within your home. Technology upgrades can be exciting, but they can also be dangerous when not installed correctly.

CAUTION - PLEASE READ!

This device (LT-3300) is intended for installation in accordance with the National Electric Code and local regulations in the United States, or the Canadian Electrical Code and local regulations in Canada. If you are unsure or uncomfortable about performing this installation consult a qualified electrician. This product is made for indoor use only and is not designed or approved for use on power lines other than 120VAC, 60Hz, single phase. Attempting to use this LT-3300 on non-approved power lines may have hazardous consequences.

Cet appareil (LT-3300) est conçu pour être installé conformément au « National Electric Code » et aux réglementations locales aux 15 États-Unis, ou au Code canadien de l'électricité et aux réglementations locales anadiennes. Si vous ne vous sentez pas à l'aise ou qualifiés pour effectuer cette installation, veuillez consultez un électricien qualifié. Ce produit est conçu pour une utilisation intérieure uniquement et n'est pas conçu ou approuvé pour une utilisation avec une ligne électrique ayant un voltage autre que 120 VCA, 60 Hz, monophasé. L'utilisation du LT-3300 avec une ligne électrique non approuvée peut avoir des résultats dangereux.

RECOMMENDED INSTALLATION PRACTICES

Use only indoors. Turn off the circuit breaker. Installing this switch and module with the power on will expose you to dangerous voltages. Connect only copper or copper-clad wire to the switch or module.

To reduce the risk of overheating and possible damage to other equipment, use the LT-3300 load output to control no more than indicated. [600 Watts Incandescent , 500W Double-Gang, 400W Triple-Gang Incandescent, 300W LED (all installations), 150W CFL (all installations) Do not install to control a receptacle, a motor-operated appliance or fluorescent lighting fixture or a transfomer supplied appliance.

Dimming an inductive load (by connecting to the light load wire), such as a fan or transformer, could cause damage to the dimmer, the load bearing device, or both.

To install your LT-3300, you'll need to identify the following four wires (NOTE: Neutral is not mandatory, but recommended):

- **Line**: Usually black and can also be called the, "hot" or "live" and carries 120VAC electricity into the electrical box
- **Neutral***: Usually white and is commonly daisy chained from box to box, usually appearing as a white wire bundle.
- **Load**: Usually black, blue or red
- **Ground**: Bare copper wire or metal fixture (if grounded)

* Neutral is mandatory in certain installations.

If you are having difficulties identifying wires, please consult an electrician.

Pratiques d'installation recommandées: Utiliser uniquement à l'intérieur. Éteignez le disjoncteur. L'installation de cet interrupteur et de ce module alors que le courant est allumé vous exposera à des tensions dangereuses. Connectez uniquement un fil de cuivre ou gainé de cuivre au commutateur ou au module.

Pour réduire le risque de surchauffe et d'endommager d'autres équipements, il est important de connecter des lumières incandescentes ayant moins de 600 watts, des lumières DEL ayant moins de 300 watts, des ampoules fluocompactes ayant moins de 150 watts ou un ventilateur utilisant moins de 1 ampère et ce dernier avec l'interrupteur en mode marche/arrêt uniquement. Ne pas installer pour controler une prise de courant, un appareil motorisê ou un appareil d'êclairage fluorescent ou un appareil alimentê par un transformateur.

La gradation d'une charge inductive, comme un ventilateur ou un transformateur, pourrait endommager le gradateur, l'interrupteur ou les deux appareils. Veuillez régler l'interrupteur en mode marche/arrêt si vous utilisez un ventilateur.

Pour installer votre interrupteur LT-3300, vous devrez identifier les quatre fils suivants (REMARQUE: le neutre est optionnel, mais recommandé) :

- **Ligne**: généralement noire et peut également être appelée «chaud » ou « sous tension » et transporte l'électricité 120 VCA dans le boîtier électrique
- **Neutre**: habituellement blanc et connecté en série d'une boîte à l'autre, les fils sont habituellement attachés ensemble dans la boîte électrique
- **Charge**: habituellement noire, bleue ou rouge
- **Mise à terre**: fil de cuivre nu ou boîtier métallique (si celui ci est mis à la terre)Si vous rencontrez des difficultés à identifier les fils, veuillez consulter un électricien.

OTHER WARNINGS

Risk of Fire	Risque d'incendie
Risk of Electrical Shock	Risque de choc électrique
Risk of Burns	Risque de brûlures

Équipement médical: Veuillez ne pas utiliser cet interrupteur pour contrôler de l'équipement médical ou nécessaire à la survie. Les appareils Z-Wave ne doivent jamais être utilisés pour contrôler la marche or l'arrêt d'équipement médical et/ou nécessaires à la survie

PLEASE NOTE: URC is unable to provide electrical and/or wiring advice outside of this document. If you are unable or unsure, please contact an electrician.

Preparing for Installation:

The LT-3300 is an extremely versatile lighting control devices, and it can be configured in many different ways to meet your installation requirements. There are a few items to keep in mind as you prepare for the installation.

- Will the LT-3300 be used as a ON/OFF switch or a Dimmer? The LT-3300 can be configured as a on/off controller or it can be configured as a device that can brighten/dim a lighting load. By default the LT-3300 is set as a On/Off switch for safety reasons, but it can be changed in the URC software after the LT-3300 has been included into the Z-Wave network.

- Does the installation have a 'neutral' wire (AC Power Type)? The LT-3300 can be used in a neutral or non-neutral wiring installation regardless if it is in on/off switch mode or dimmer mode. For installations where no neutral wire is present, you may need to install a special bypass to prevent flickering and/or to keep your LT-3300 powered. The LT-3300 will automatically detect if it is connected to a neutral wire or not, so there is no need configure this functionality.

- Is it a Single-Pole or Multi-Way (3+Way) Installation? The LT-3300 can be used in a Multi-Way installation, where more than one light switch is controlling a single lighting load. You will need to use a LT-3300 at each location where the lighting load should be controlled from. This type of installation will require a neutral wire to be used to the LT-3300's controlling the lighting load. All the LT-3300s will need to be included into the Z-Wave network, and then associated together from within the URC software.

- Will the LT-3300 be used as a 'Scene Controller'? The LT-3300 can be used as a scene controller either connected to a lighting load, or as a stand alone device connected to AC power. The LT-3300 can have up to 15 different scenes assigned to it based on the number of times the up / down button is pressed, or press and hold / released. There is also a scene that can be assigned to the 'Configuration' button. Assigned scenes are not just for lighting control, any action programmed within the URC system can be assigned as a scene to be triggered from the LT-3300.

  - Example: Double tap the "Down Button" to turn off the lights and the Audio/Video gear in the room.

  - Example: Press the "Config Button" on the LT-3300 by the bed to activate the "Good Night" scene that locks all the doors, shuts the garage doors, adjusts all the lights, closes the shades, sets the temperature on the thermostat, arms the security system, and turns the audio/video gear off in rooms that are not being used.

Wiring Instructions: Neutral Installation

Please use the following wire diagram if you have a **neutral wire**. Terminal screw torque: 0.8(7.08) N•m (lbf-in). For **non-neutral installations**, more wiring diagrams and information please visit: **www.urc-automation.com/roducts/lt-3300**

Single-Pole Installation (Single Dimmer/Switch) - Neutral Wire

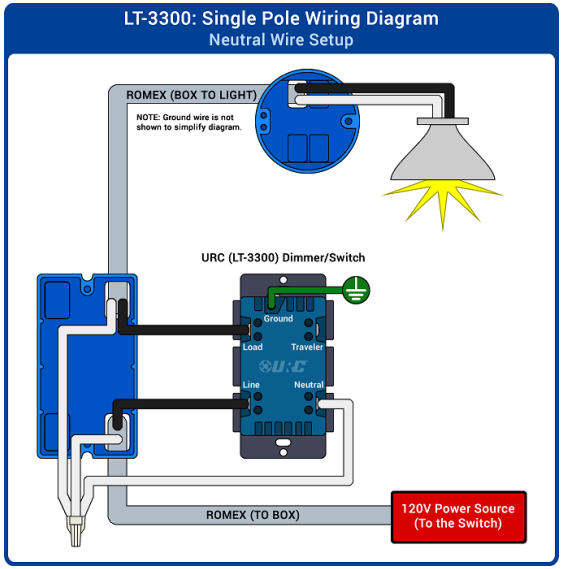

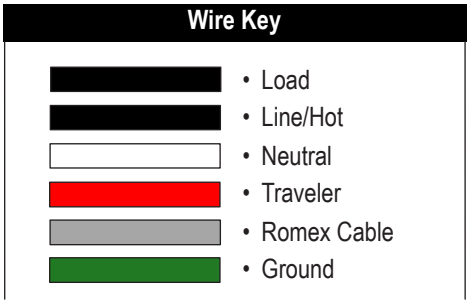

3-Way Installation (Line/Load in Same Box)

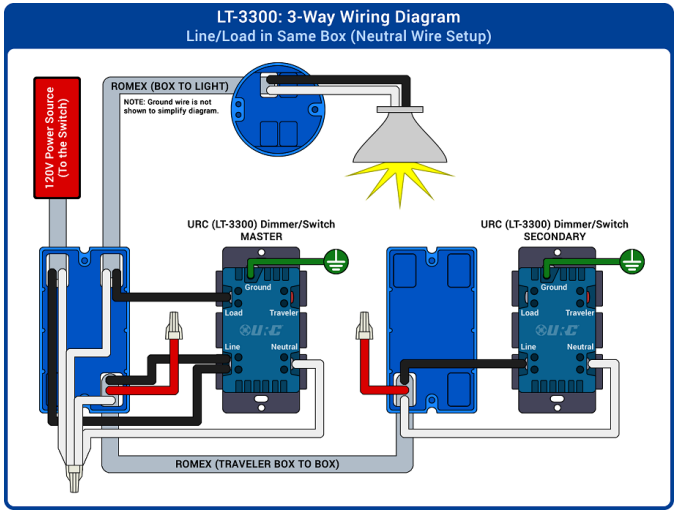

- The LT-3300 can be used in a 3-way/4-way lighting installation.
- The Master Load Controller must be defined in URC software.
- Secondary controllers must be defined in URC software.
- Multi-Way will not work without prior programming.
- Traveler Wire is not needed for Multi-Way installation of two or more LT-3300s.

URC RECOMMENDATION

Use **two or more LT-3300s** for the best possible user experience.

LT-3300 Dimmer/Switch

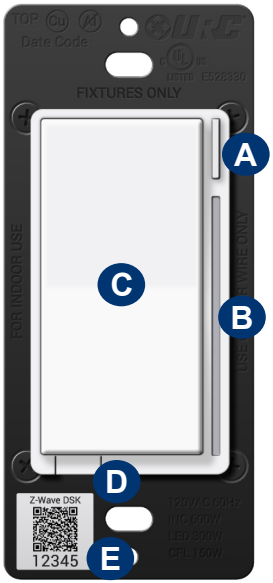

A. Configuration Button: This button is used for setting certain parameters of the Dimmer/ Switch. It can also be used to activate a scene from a single button press.

B. RGB LED Notification Bar: This LED bar serves as a visual display for the dim level of your lights as well as offering visual notifications based on events that are set up via the Gateway. It can be further configured, disabling or setting certain brightness levels.

C. Responsive Paddle: The paddle works in a similar manner to a standard dimmer or switch. When you tap up on the paddle, the light will turn on, and when you tap down the light will turn off. Pressing and Holding the up paddle will increase the brightness, and pressing and holding the down paddle will dim the lights (when configured to a dimming device). The paddle may also be used for scene control.

D. Air Gap Dimmer: This will cut the power to the load your LT-3300 is wired to.

E. Security 2 DSK: The DSK can found on the front of the LT-3300 (metal plate) and inside the box. It is used for Z-Wave SmartStart functionality.

SmartStart enabled products can be added into a Z-Wave network by scanning the Z-Wave QR code present on the product with a controller providing SmartStart inclusion. No further action is required and the SmartStart product will be added automatically within 10 minutes of being switched on in the network vicinity.

Including LT-3300

Below are the steps for including the LT-3300 to a Z-Wave Gateway.

Plan, Prep, and Install:

- Locate an area to install the LT-3300 that is within a recommend distance from the Gateway.
- Walls, ceilings, and even furniture may degrade communication between devices.
- Remember to turn off the power prior to installation.
- Check the signal range by holding the config button for **5-10 seconds**.
  [**Green** = **Good Signal** / **Red** = **Poor Signal**]

Including to the Network:

- Put the Z-Wave Gateway into **inclusion** mode.
- Once started, press the config button on the LT-3300 three times and the LED Bar will flash blue. If included successfully, the bar will turn green. If it turns red, the inclusion process failed.

Exclusion from the Network:

- Put the Z-Wave Gateway into **exclusion** mode.
- Once started, press the config button on the LT-3300 three times. The LED Bar will turn Green if excluded successfully.

Configuration Button Command Features

About	Description	Configuration Button		LED Effect	LED Color	Duration
		Press / Hold	# Press / Sec			
Clear Notifications	Clears the RGB Bar of any notifications.	Press	2x	N/A	N/A	N/A
Inclusion / Exclusion	3x Tap of Configuration Button (30s timeout)	Press	3x	Pulse	Blue (Default)	See desc
Z-Wave Signal Test	Tests the signal strength of the dimmer.	Hold	5-10s	Solid	Green	N/A

Z-Wave Signal Test

Pressing and holding the "Configuration" button from 5 to 10 seconds will display the Z-Wave signal strength of the LT-3300. When the configuration button is released the LT-3300's status LED will display either "Green = Good Signal", "Yellow = Weak Signal", or "Red = No Signal". If Yellow or Red are displayed, it is recommended to add additional Z-Wave nodes to the network to assist in building a robust Z-Wave mesh network.

Factory Default

You may factory reset the LT-3300 by holding down the Configuration Button and the Up Paddle at the same time for twenty (20) or more seconds. The LED Bar will initially turn green, then turn yellow, and finally turn Red and blink three (3) times to confirm. However, we recommend using a certified Z-Wave controller to remove the device from your network before factory resetting the LT-3300. Only use either of these procedures in the event that the network primary controller is missing or otherwise inoperable.

Z-Wave Long Range:

The LT-3300 supports Z-Wave Long Range and can be included into a network with compatible Z-Wave Long Range hub/gateway.

To include via Long Range, enable Long Range support in your hub/gateway and add the DSK into the provisioning list. Then apply power to the LT-3300 and wait for the device to be added to the network.

Note: The URC TRF-ZW10 gateway does not support Z-Wave Long Range.

Parameters:

The LT-3300 has a number of parameters available to give the user a true customized experience.

Some of the highlights include: changing the LT-3300 from a switch to a dimmer, changing the dimming speed, min/max brightness, LED status bar color/animation, default power on behavior, double tap to max brightness behavior, and so much more.

All the parameters can be configured directly within the URC Accelerator software, or you can visit "**www.urc-automation.com/products/lt-3300**" to see the full list of available parameters.

Association Groups

Group 1: Lifeline
Members of this group will receive unsolicited messages related to the status of the LT-3300.

Group 2: Basic Setup
Sends On/Off commands to associated devices when switch is pressed

Group 3: Switch Multilevel Set
Sends dim/brighten commands to associated devices when the switch is pressed, sends the command every second to keep associated devices in sync.

Group 4: Switch Multilevel Start/Stop
Sends start level change up/down commands when switch is pressed.

Group 5: Basic Set 'Double Tap'
Sends On/Off commands to associated devices when the LT-3300's paddles are double tapped. Sends a basic set 'on' when double tap of the up paddle occurs and basic set 'off' when double tap of the down paddle occurs.

Group 6: Basic Set 'Triple Tap'
Sends On/Off commands to associated devices when the LT-3300's paddles are triple tapped. Sends a basic set 'on' when triple tap of the up paddle occurs and basic set 'off' when triple tap of the down paddle occurs.

Grouping Identifier	Max Nodes	Send Commands
Group 1	10	Central Scene Notification
		Multilevel Report
		Protection Report
		Device Reset Locally
		Meter Report
Group 2	10	Basic Set
Group 3	10	Switch Multilevel Set
Group 4	10	Switch Multilevel Set [Start/Stop]
Group 5	10	Basic Set [Double Tap]
Group 6	10	Basic Set [Triple Tap]

Command Classes:

Supported Command Class	Version	Security Level
Association	V2	S0/S2
Association Group Info	V3	S0/S2
Central Scene	V2	S0/S2
Configuration	V4	S0/S2
Device Reset Locally	V1	S0/S2
Firmware Update Meta Data	V5	S0/S2
Indicator	V3	S0/S2
Manufacturer Specific	V1	S0/S2
Meter	V2	S0/S2

Supported Command Class	Version	Security Level
Multi Channel Association	V2	S0/S2
Power Level	V1	S0/S2
Protection	V2	S0/S2
Security	V1	None
Security 2	V1	None
Supervision	V1	None
Switch Multilevel	V4	S0/S2
Transport Service	V2	None
Version	V3	S0/S2
ZwavePlus Info	V4	None

FCC Statement

This device complies with part 15 of the FCC Rules. Operation is subject to the following two conditions: (1) This device may not cause harmful interference, and (2) this device must accept any interferene received, including interference that may cause undesired operation.

This equipment should be installed and operated with minimum distance of 20 cm between the radiator and your body.

NOTE: This equipment has been tested and found to comply with the limits for a Class B digital device, pursuant to part 15 of the FCC Rules. These limits are designed to provide reasonable protection against harmful interference in a residential installation. This equipment generates, uses and can radiate radio frequency energy and, if not installed and used in accordance with the instructions, may cause harmful interference to radio communications. However, there is no guarantee that interference will not occur in a particular installation. If this equipment does cause harmful interference to radio or television reception, which can be determined by turning the equipment off and on, the user is encouraged to try to correct the interference by one or more of the following measures.

- Reorient or relocate the receiving antenna.
- Increase the separation between the equipment and receiver.
- Connect the equipment into an outlet on a circuit different from that to which the receiver is connected.
- Consult the dealer or an experienced radio/TV technician for help.

MODIFICATION: Any changes or modifications not expressly approved by the grantee of this device could void the user's authority to operate the device.

IC Statement

This device contains licence-exempt transmitter(s)/receiver(s) that comply with Innovation, Science and Economic Development Canada's licence-exempt RSS(s). Operation is subject to the following two conditions:

1. This device may not cause interference.
2. This device must accept any interference, including interference that may cause undesired operation of the device.

L'émetteur/récepteur exempt de licence contenu dans le présent appareil est conforme aux CNR d'Innovation, Sciences et Développement économique Canada applicables aux appareils radio exempts de licence. L'exploitation est autorisée aux deux conditions suivantes:

1. L'appareil ne doit pas produire de brouillage;
2. L'appareil doit accepter tout brouillage radioélectrique subi, même si le brouillage est susceptible d'en compromettre le fonctionnement.

This equipment complies with IC radiation exposure limits set forth for an uncontrolled environment. This equipment should be installed and operated with minimum distance of 20 cm between the radiator and your body.

Cet équipement est conforme aux limites d'exposition aux rayonnements de la IC établies pour un environnement non contrôé. Cet équipement doit être installé et fonctionner à au moins 20 cm de distance d un radiateur ou de votre corps.

CAN ICES-003 (B) / NMB-003 (B)

Warranty

Universal Remote Control, Inc. ("URC") warrants that the URC equipment shall be free from defects in material and workmanship under normal usage for one (1) year from purchase for all products, when such is purchased from URC. This limited warranty is valid only in the United States of America. URC warrants that the software will substantially conform in any material respect to its functional specifications at the time of delivery. URC shall not be liable for operational, technical or editorial errors and/or omissions made in the URC documentation. URC does not warrant that the URC software is bug-free or error free or that there are no errors/bugs in the URC software.URC equipment purchased from other than an authorized URC dealer or distributor are without warranty.In the event of any warranty claim, URC will, at its sole option, repair the URC equipment using new or comparable rebuilt parts, or exchange the URC equipment for new or rebuilt equipment. In the event of a defect, these are the end user's exclusive remedies. All the URC equipment returned for service, exchange or repair require an RGA number. To obtain an RGA number, you must complete a Return Request Form which you may obtain by calling (914) 835-4484 or contacting URC at returnrequest@urc-automation.com. To obtain warranty service, end user must deliver the URC equipment, freight prepaid, in its original packaging or packaging affording adequate protection to URC at 37 Ramland Road, Unit 104, Orangeburg, NY 10962. It is end user's responsibility to backup any macro programming, artwork, software or other materials that may have been programmed into the unit. It is likely that such data, software, or other materials will be lost during service and URC will not be responsible for any such damage or loss. A dated purchase receipt, bill of sale, installation contract or other verifiable proof of purchase is required.For detailed information regarding warranties and returns, please call the Customer Service Center at (914) 835-4484.