Yale® Z-Wave Plus™ Smart Module Installation Guide

Please use this procedure only when network primary controller is missing or otherwise inoperable.

Adding a Yale Z-Wave Plus™ v2 Smart Module to your Assure Lock & Z-Wave™ System

1. Install Yale Smart Module into slot above battery compartment
   IMPORTANT: Batteries must be removed before inserting Yale Smart Module:
   - Remove battery cover
   - Remove batteries
   - Insert Yale Smart Module
   - Reinstall batteries
   - Reinstall battery cover

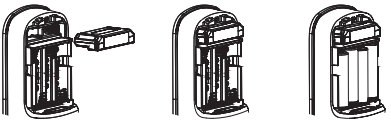

2. Open Z-Wave™ system's smart home or alarm app on your smartphone or tablet
3. If you have SmartStart* enabled with your Z-Wave™ System follow in-app prompts to add a new device If you don't have SmartStart or are not sure, follow steps 4 - 6
4. On your lock keypad, enter your master entry code followed by the ⚙ icon
5. Press the 7 key followed by the ⚙ icon
6. Press the 1 key followed by the ⚙ icon

If prompted, scan QR code

Removing a Yale Z-Wave Plus™ v2 Smart Module from your Assure Lock & Z-Wave™ System

1. Open Z-Wave™ system's smart home or alarm app and follow instructions for removing a device
2. On your lock keypad, enter your master entry code followed by the ⚙ icon
3. Press the 7 key followed by the ⚙ icon
4. Press the 3 key followed by the ⚙ icon
5. Remove Yale Smart Module from slot above battery compartment
   IMPORTANT: Batteries must be removed before removing Yale Smart Module:
   - Remove battery cover
   - Remove batteries
   - Remove Yale Smart Module
   - Reinstall batteries
   - Reinstall battery cover

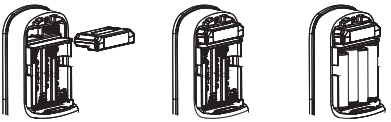

6. If you're adding a new Yale Smart Module, follow instructions included with it

*SmartStart enabled products can be added into a Z-Wave network by scanning the Z-Wave QR Code present on the product with a controller providing SmartStart inclusion. No further action is required and the SmartStart product will be added automatically within 10 minutes of being switched on in network vicinity.

P/N AYR-MOD-ZW3-MNL-0015 Rev A

Warning: Changes or modifications to this device, not expressly approved by ASSA ABLOY Residential Group could void the user's authority to operate the equipment.

This device is a security enabled Z-Wave Plus™ v2 product that is able to use encrypted Z-Wave Plus™ v2 messages to communicate to other security enabled Z-Wave Plus™ v2 products. This device must be used in conjunction with a Security Enabled Z-Wave™ Controller in order to fully utilize all implemented functions. This product can be operated in any Z-Wave™ network with other Z-Wave™ certified devices from other manufacturers. All non-battery operated nodes within the network will act as repeaters regardless of vendor to increase reliability of the network.

FCC:

Class B Equipment

This equipment has been tested and found to comply with the limits for a Class B digital device, pursuant to Part 15 of the FCC Rules. These limits are designed to provide reasonable protection against harmful interference in a residential installation. This equipment generates, uses, and can radiate radio frequency energy and, if not installed and used in accordance with the instructions, may cause harmful interference to radio communications. However, there is no guarantee that interference will not occur in a particular installation. If this equipment does cause harmful Interference to radio or television reception, which can be determined by turning the equipment off and on, the user is encouraged to try to correct the interference by one or more of the following measures:

- Reorient or relocate the receiving antenna.
- Increase the separation between the equipment and receiver.
- Connect the equipment into an outlet on a circuit different from that to which the receiver is connected.
- Consult the dealer or an experienced radio/TV technician for help.

THIS DEVICE COMPLIES WITH PART 15 OF THE FCC RULES. OPERATION IS SUBJECT TO THE FOLLOWING TWO CONDITIONS. (1) THIS DEVICE MAY NOT CAUSE HARMFUL INTERFERENCE, AND (2) THIS DEVICE MUST ACCEPT ANY INTERFERENCE RECEIVED, INCLUDING INTERFERENCE THAT MAY CAUSE UNDESIRED OPERATION.

This equipment complies with FCC radiation exposure limits set forth for an uncontrolled environment. This equipment should be installed and operated with minimum distance 20cm between the radiator & your body.

Industry Canada:

Section 7.1.2 of RSS-GEN Under Industry Canada regulations, this radio transmitter may only operate using an antenna of a type and maximum (or lesser) gain approved for the transmitter by Industry Canada. To reduce potential radio interference to other users, the antenna type and its gain should be so chosen that the equivalent isotropically radiated power (e.i.r.p.) is not more than that necessary for successful communication.

En vertu des règlements d'Industrie Canada, cet émetteur radio ne peut fonctionner avec une antenne d'un type et un maximum (ou moins) approuvés pour gagner de l'émetteur par Industrie Canada. Pour réduire le risque d'interférence aux autres utilisateurs, le type d'antenne et son gain doivent être choisies de façon que la puissance isotrope rayonnée équivalente (PIRE) ne dépasse pas ce qui est nécessaire pour une communication réussie.

Section 7.1.3 of RSS-GEN This Device complies with Industry Canada License-exempt RSS standard(s). Operation is subject to the following two conditions: 1) this device may not cause interference, and 2) this device must accept any interference, including interference that may cause undesired operation of the device.

Cet appareil est conforme avec Industrie Canada RSS standard exemptes de licence(s). Son fonctionnement est soumis aux deux conditions suivantes: 1) ce dispositif ne peut causer des interférences, et 2) cet appareil doit accepter toute interférence, y compris les interférences qui peuvent causer un mauvais fonctionnement du dispositif.

CAN ICES-3B/NMB-3B

Yale Locks & Hardware

24/7 Tech Support: 1-855-492-0505 • www.yalehome.com

Yale® is a registered trademark of ASSA ABLOY Residential Group. Other products' brand names may be trademarks or registered trademarks of their respective owners and are mentioned for reference purposes only. © Copyright 2020. All rights reserved. Reproduction in whole or in part without the express written permission of ASSA ABLOY Residential Group is prohibited.

nex**Touch**™ Keypad Access Cylindrical Lock
Touchscreen and Push Button
Installation and Programming Instructions

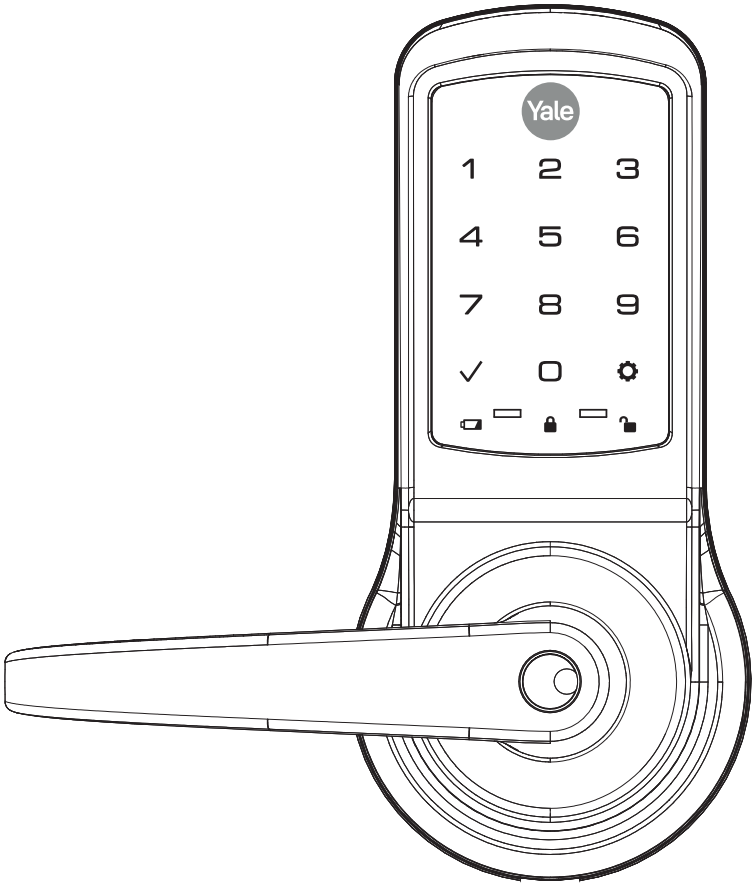

WARNING

This product can expose you to lead which is known to the state of California to cause cancer and birth defects or other reproductiveharm.For more information go to www.P65warnings.ca.gov.

08/2018

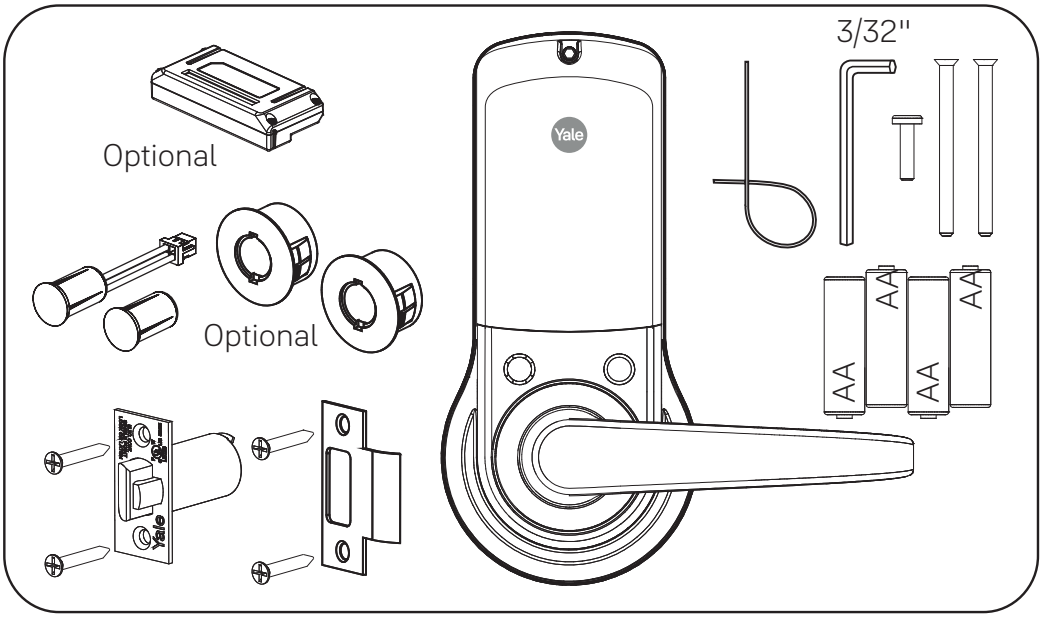

Retrofitting or modifying this product may impact fire rating, safety features and warranty.
Consult with code specifications to ensure compliance with all codes and ratings.

Determine Handing

The hand of a door is determined from the secure side of the door. The term "secure" means the side from which you initially unlock and enter.

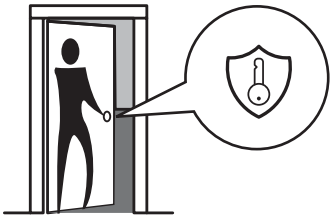

Left Hand "LH", Hinges Left.
Open Inward.

Left Hand Reverse "LHR", Hinges Left.
Open Outward.

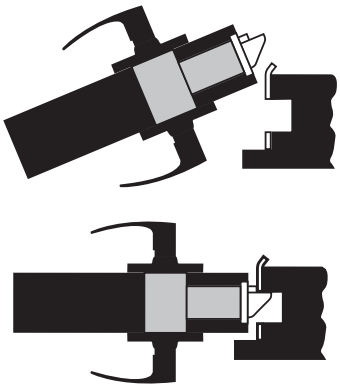

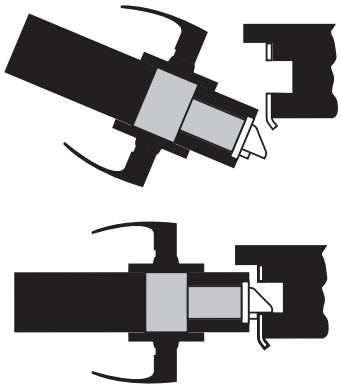

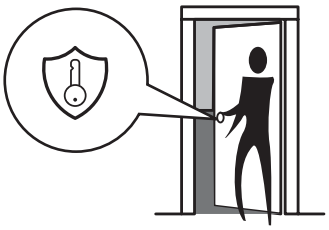

Right Hand "RH", Hinges Right.
Open Inward.

Right Hand Reverse "RHR", Hinges Right.
Open Outward.

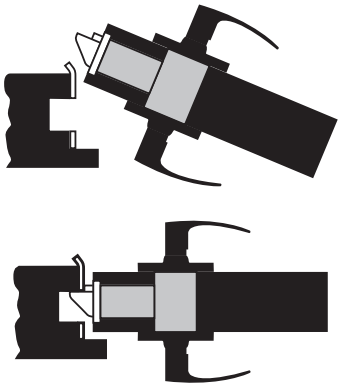

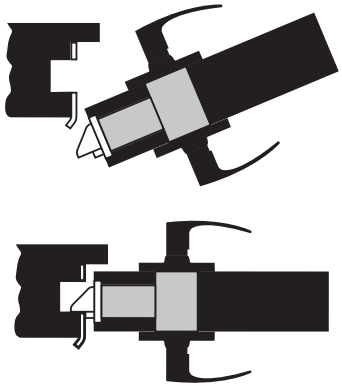

1 Prepare Door

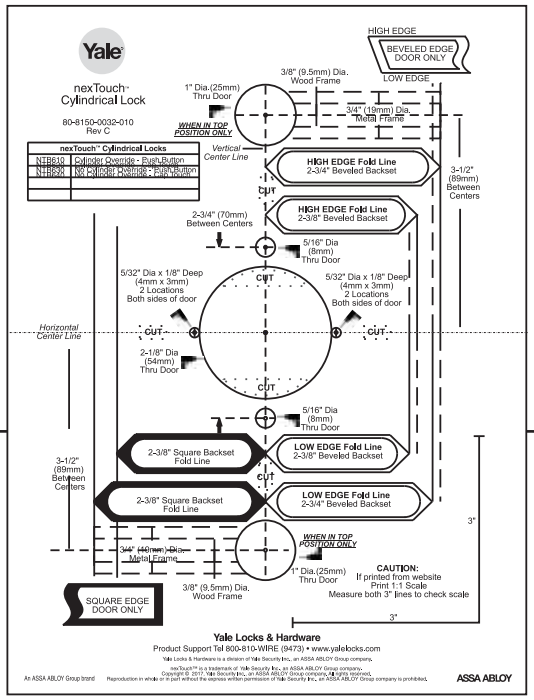

DPS Option
Wood Door:
3/8" Dia. Thru to Hole in Door Face

*Metal Door:
3/4" Dia. Thru to Hole in Door Face

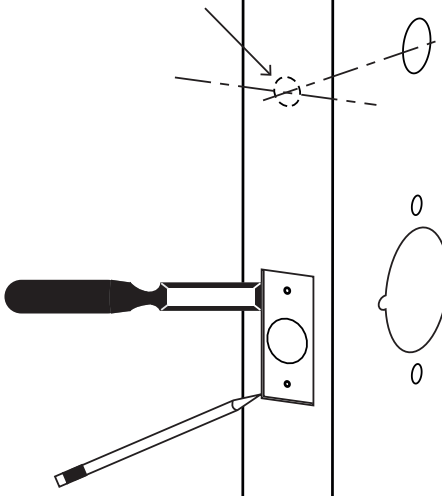

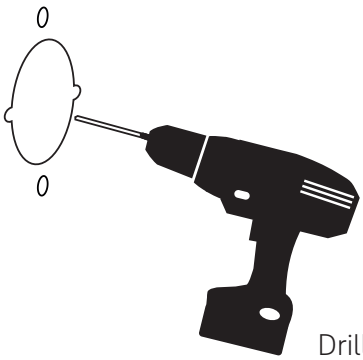

Drill holes 1/2 way thru door then complete from other side to prevent splitting.

***Metal Door Installations**
Supplied plastic collar MUST be installed for DPS to function properly.

2 Prepare Frame

7-16 / 8-32 x 1" UNCWS

x2

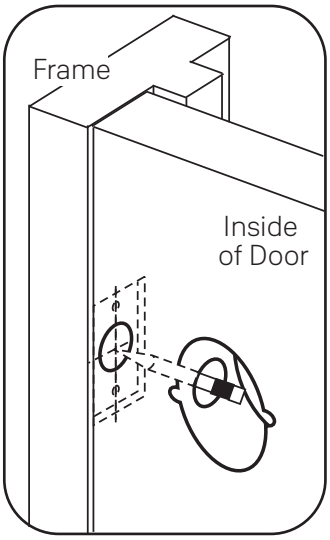

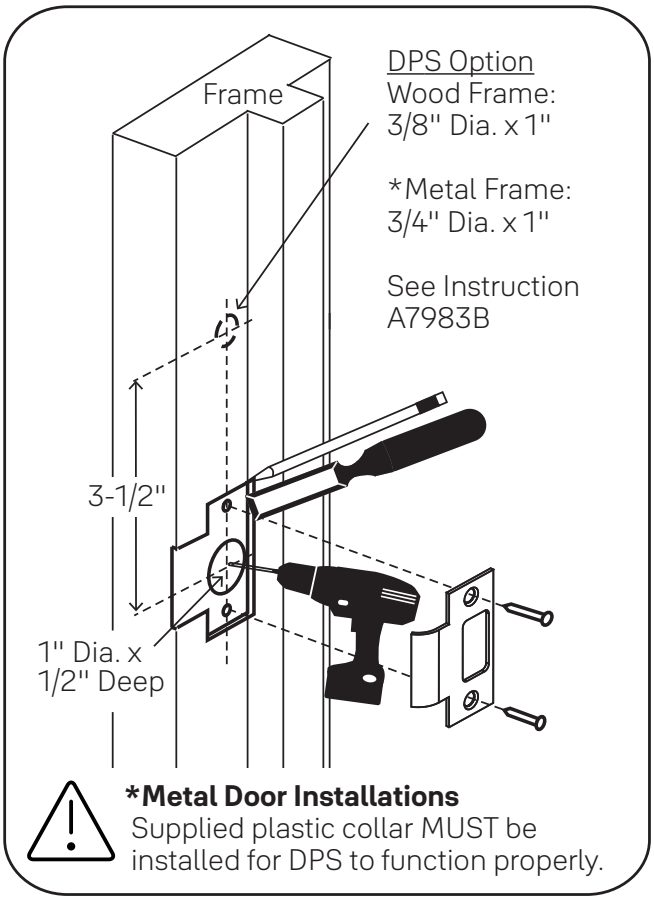

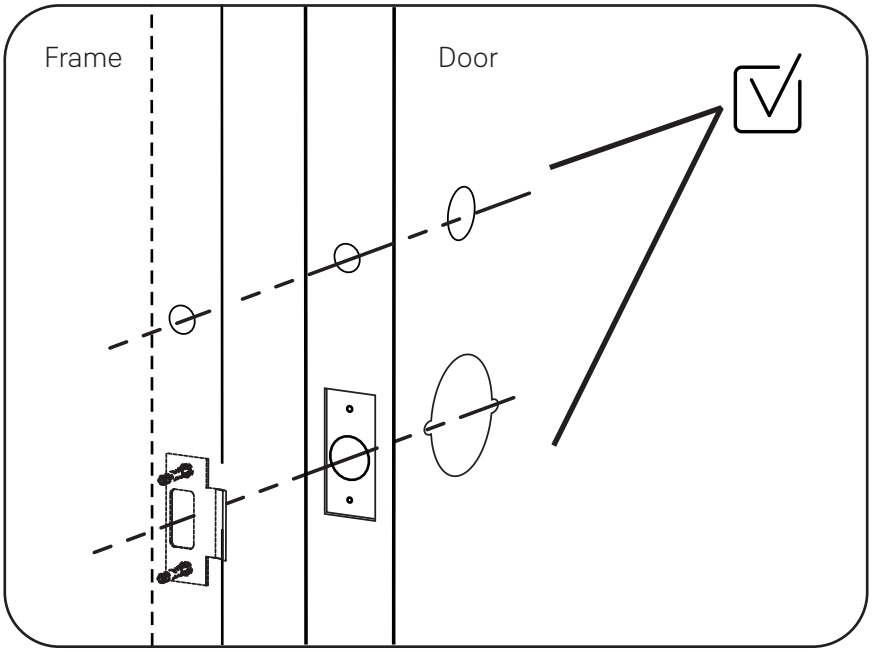

3 Prepare Inside Lock

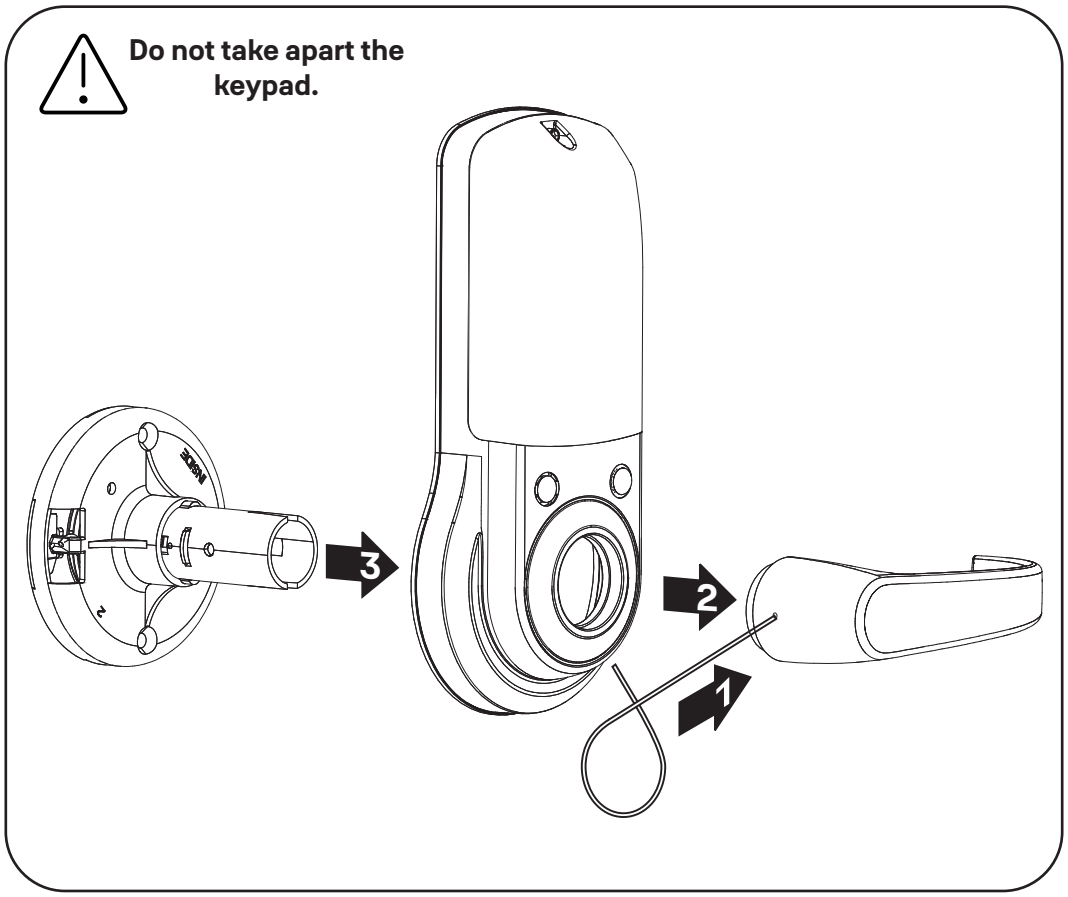

4 Install Latchbolt

2-3/8" Latchbolt for thin doors sold separately.
See Installation Options.

7-16 / 8-32 x 1" UNCWS

x2

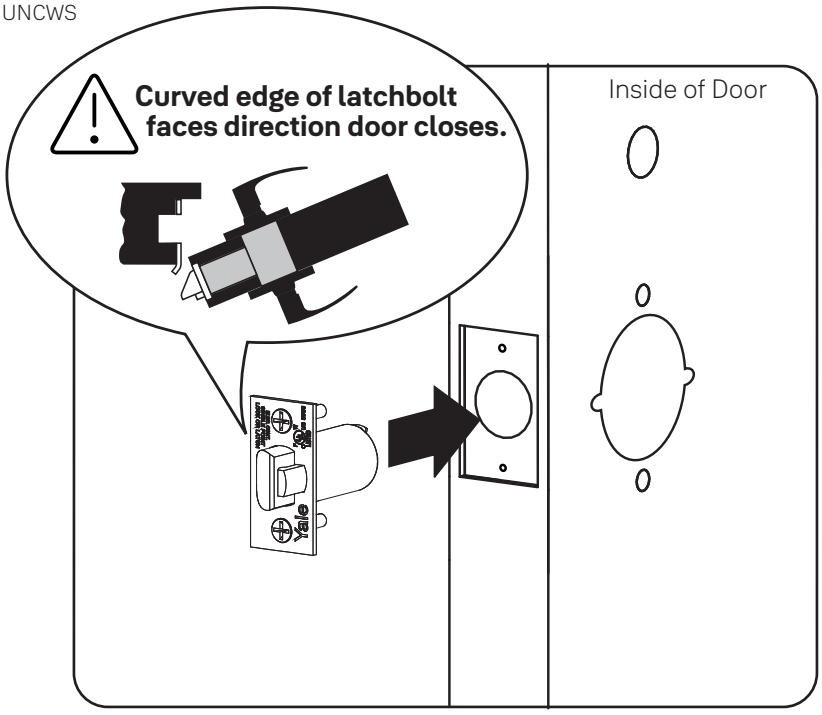

5 Remove Battery Cover

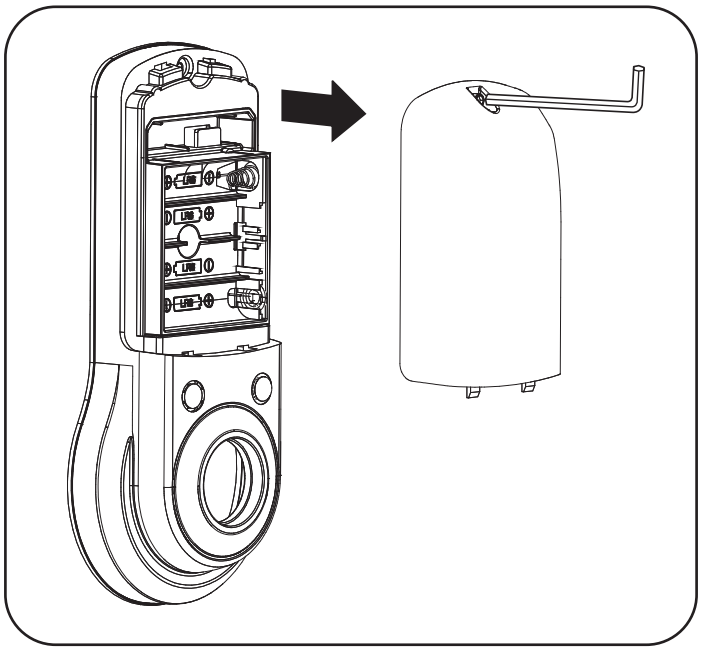

6 Install Keypad

Thin door gaskets sold separately.
See Installation Options.

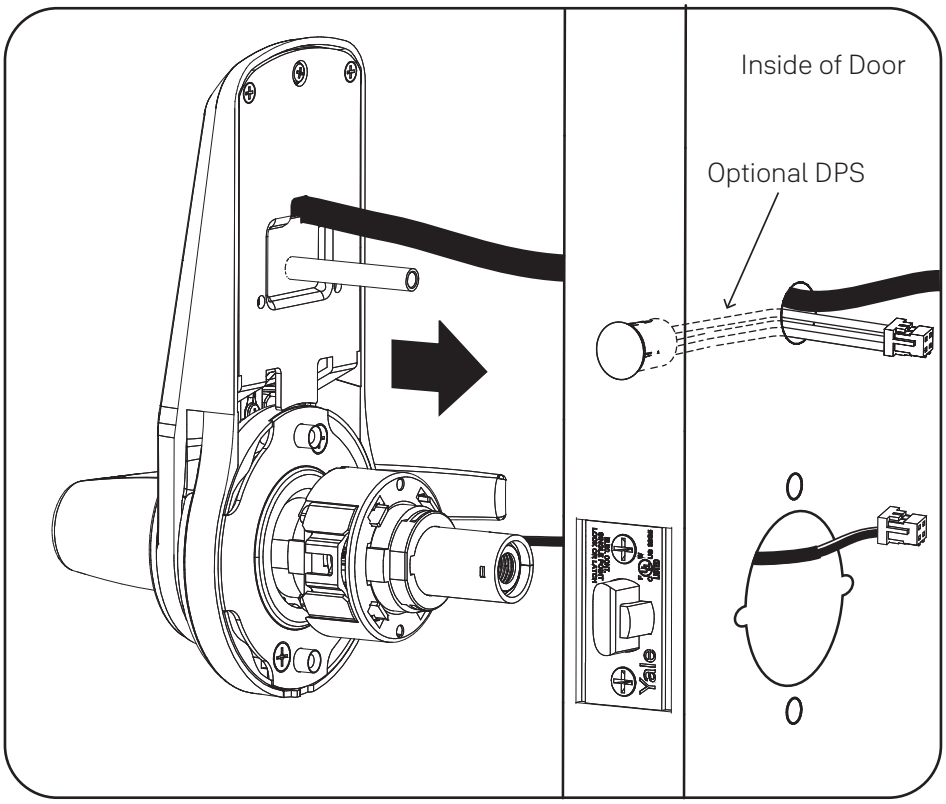

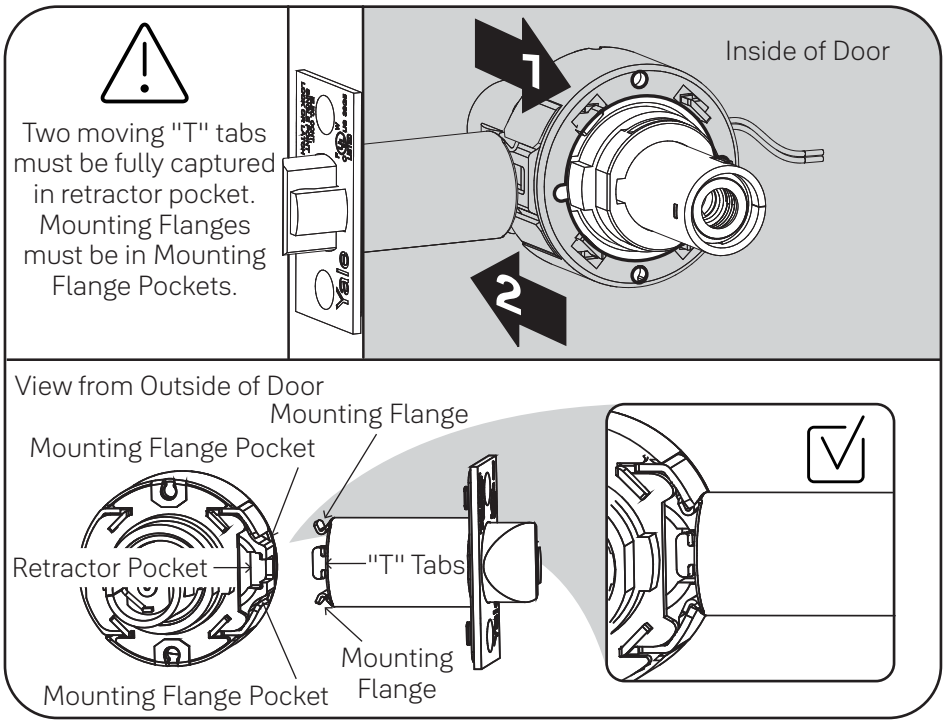

7 Install Inside Support

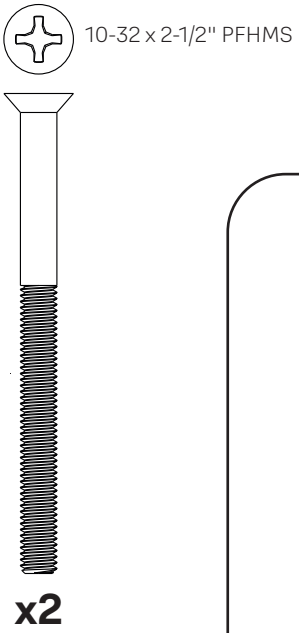

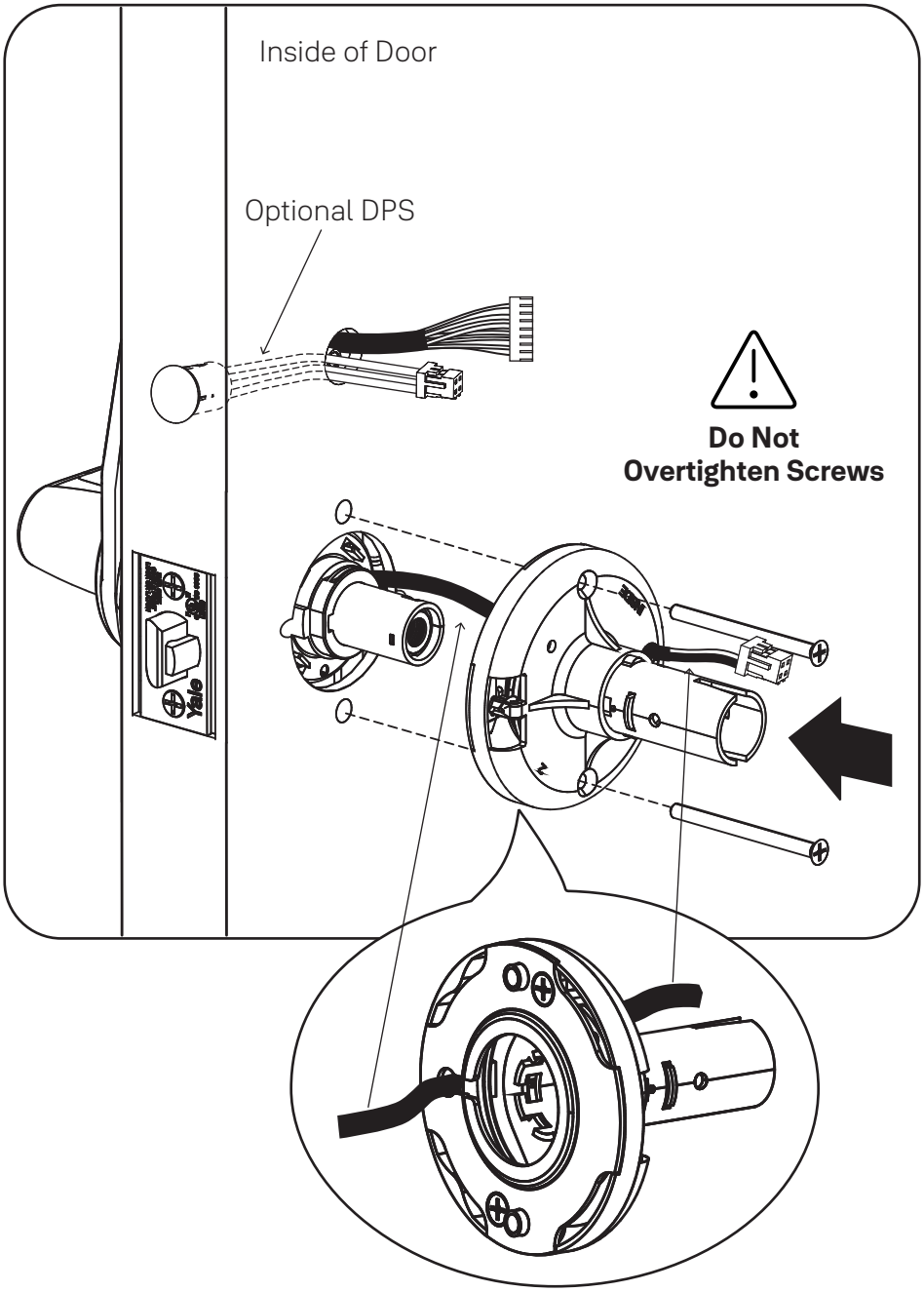

8 Attach Cables to Inside Lock

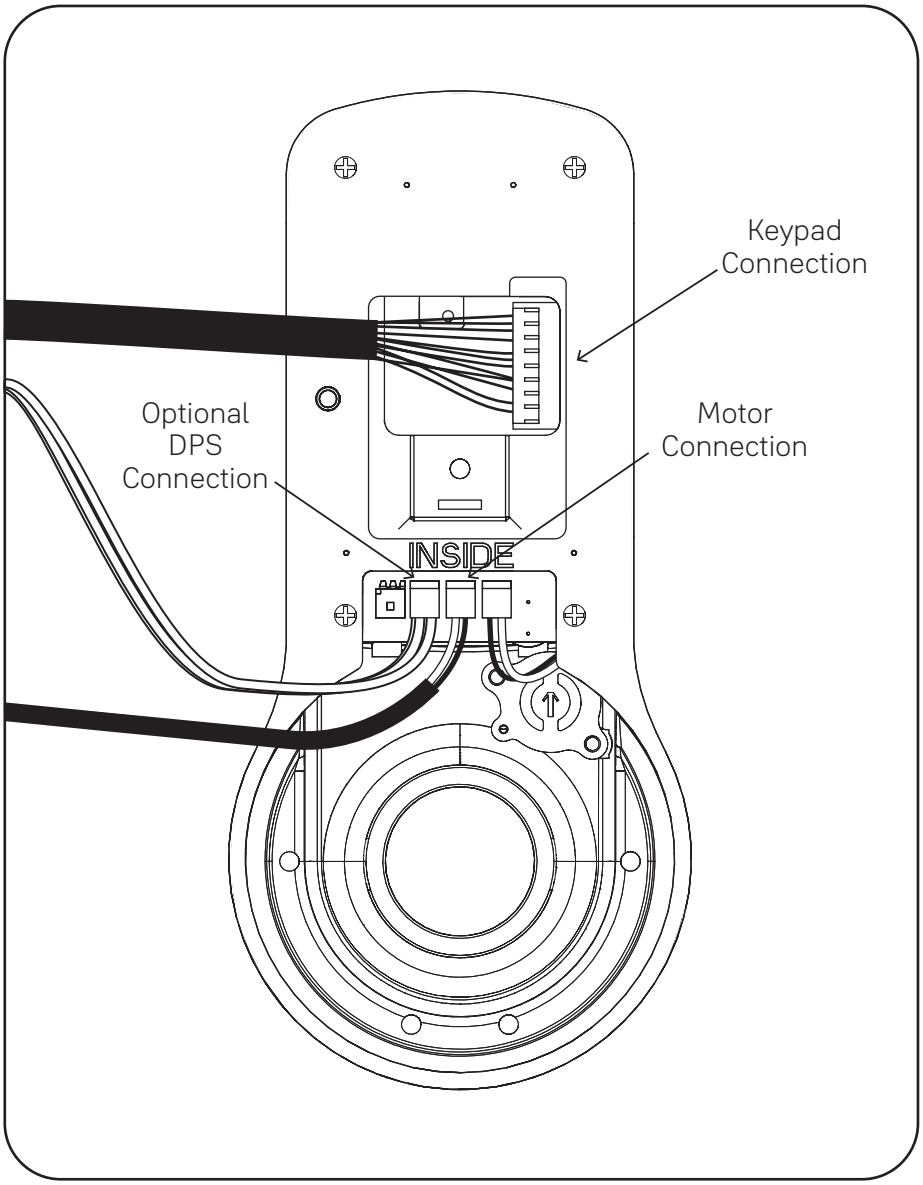

9 Install Inside Lock

Thin door gaskets sold separately.
See Installation Options.

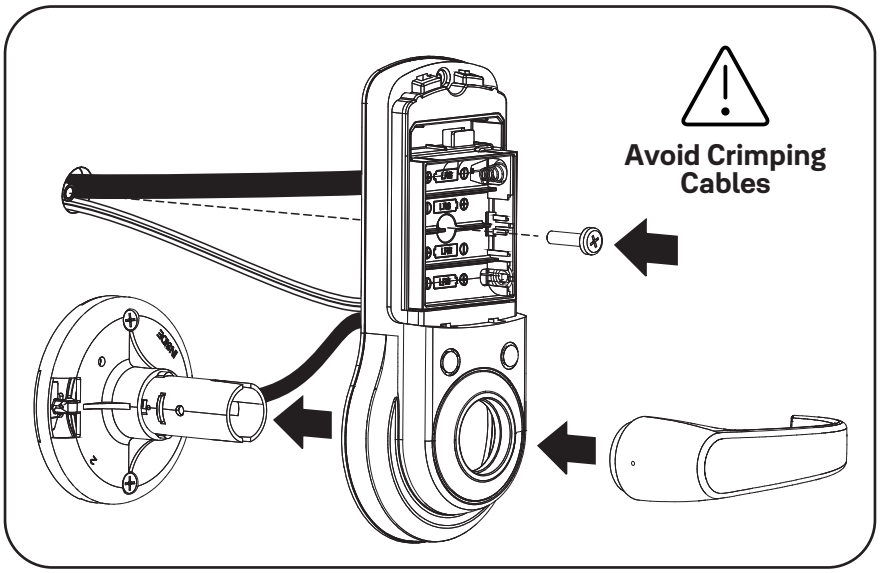

Test Inside Lever Operation

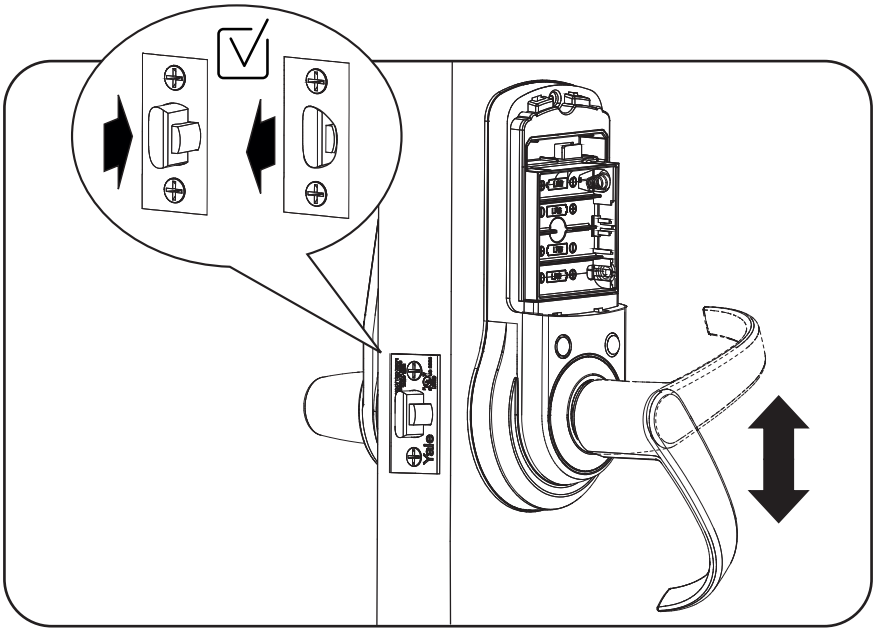

10 Install Batteries & Cover

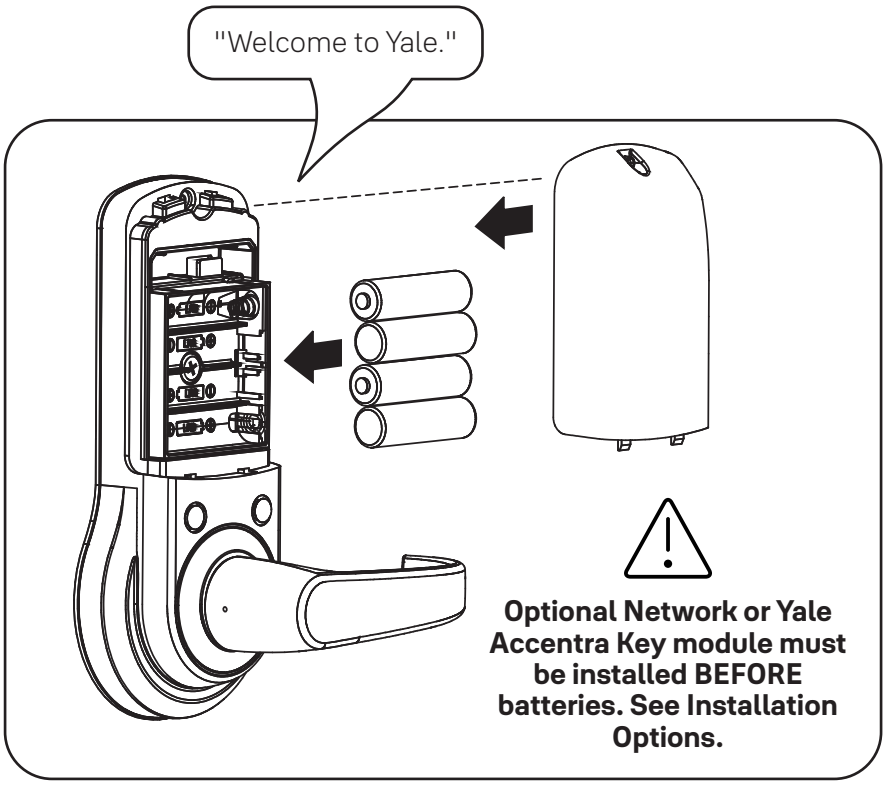

Congratulations, you've installed the Yale nex**Touch**™ Cylindrical Lock!

0 optional Installation Options

Adjusting for 1-3/8" Door (if necessary)

Order 1-3/8" Thin Door Kit: 14-4761-0106

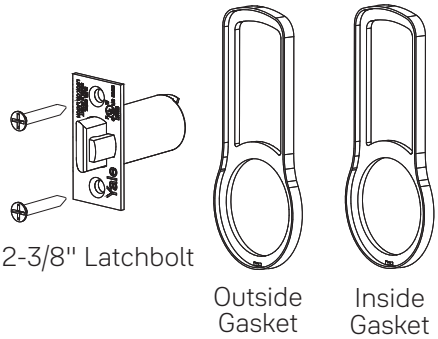

CAUTION: Cylinders furnished with nexTouch™ lock for use in 1-3/8" doors have a tailpiece that is 1/4" shorter than the standard cylinders that are furnished for 1-3/4" doors. Trying to install a standard cylinder in 1-3/8" door will DAMAGE the lock.

Privacy DPS Switch

Door Position Switch Option enables Privacy feature

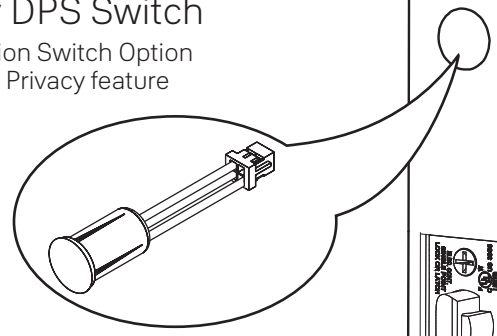

Metal Frame/Door Installations
Supplied plastic collars MUST be installed for DPS to function properly.

Inside of Door

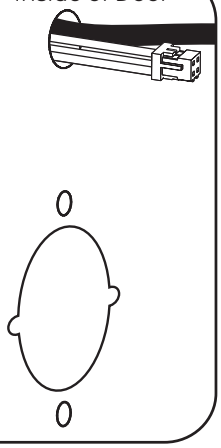

Network or Yale Accentra Key Module

The Yale Accentra Key module enables access with physical (cards and fobs) and mobile credentials ONLY. Creation and use of User PIN codes are disabled.

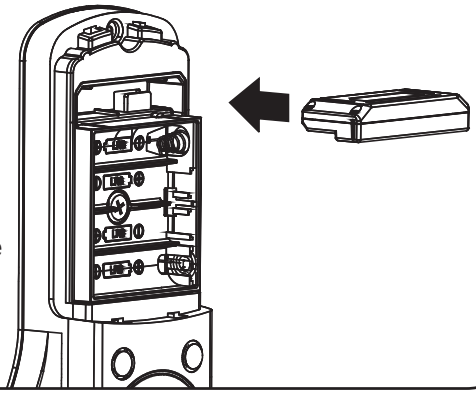

Programming Instructions

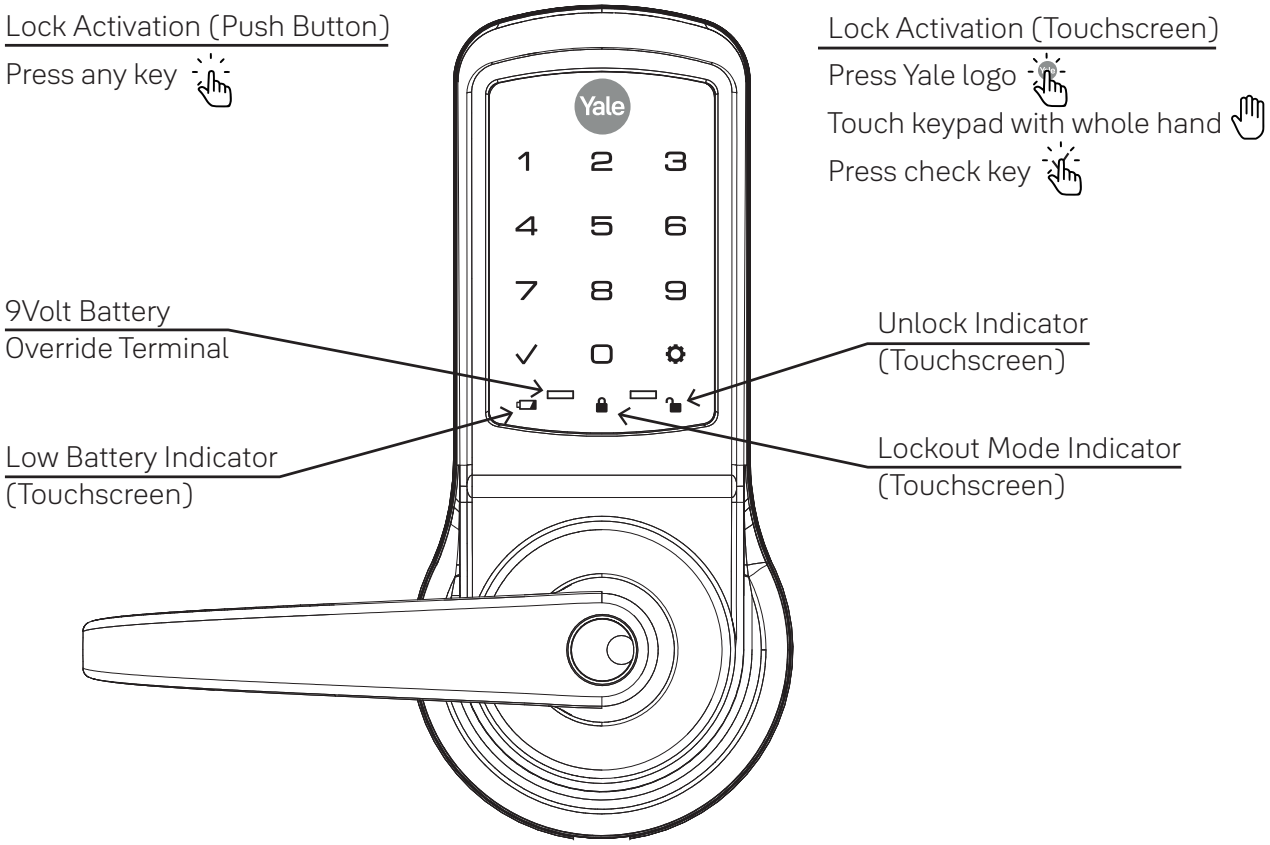

Keypad

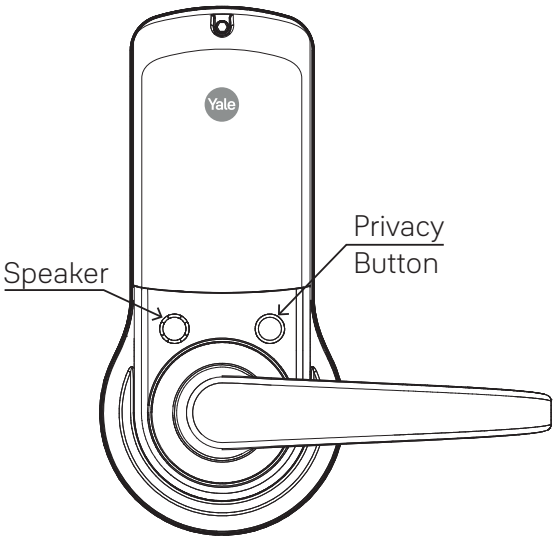

Inside Lock

1 Creating Master PIN Code

Creating a Master PIN Code must be performed upon installation or after resetting the lock to factory default. Programming and use of lock is not possible until this step has been successfully completed.

Activate Lock

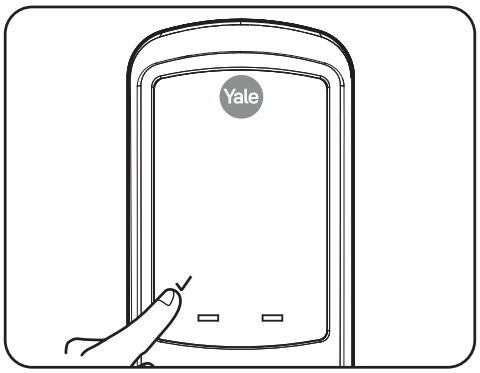

Press ⚙

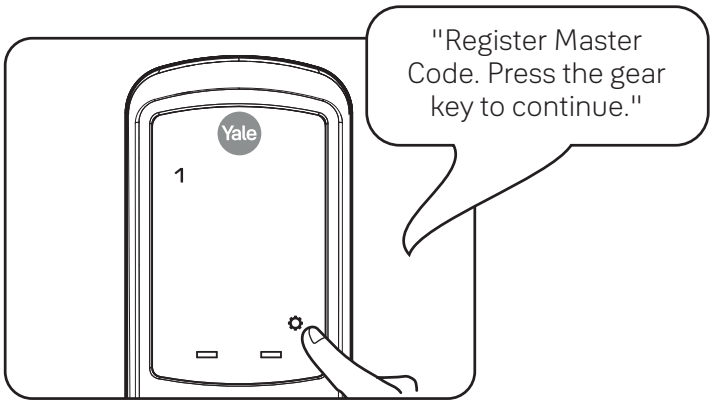

Enter 4-8 digit Master PIN Code.

Press ⚙

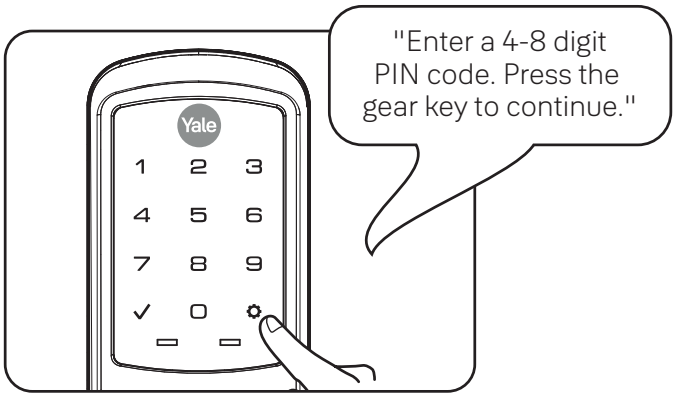

Press ✓

2a Creating User PIN Codes

Master PIN code must be created first.
*Max User Codes = 500

The Yale Accentra Key module enables access with physical (cards and fobs) and mobile credentials ONLY. Creation and use of User PIN codes are disabled.

Activate Lock

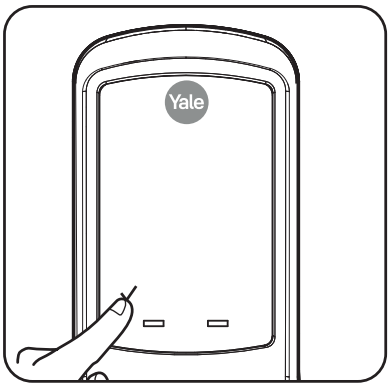

Enter Master PIN code

Press ⚙

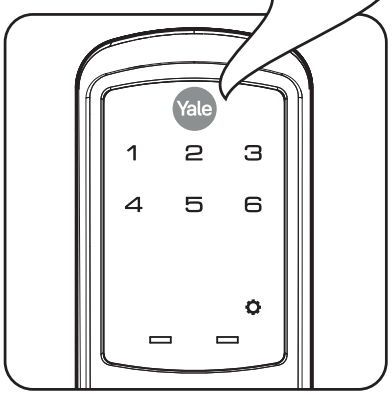

Press 2

Press ⚙

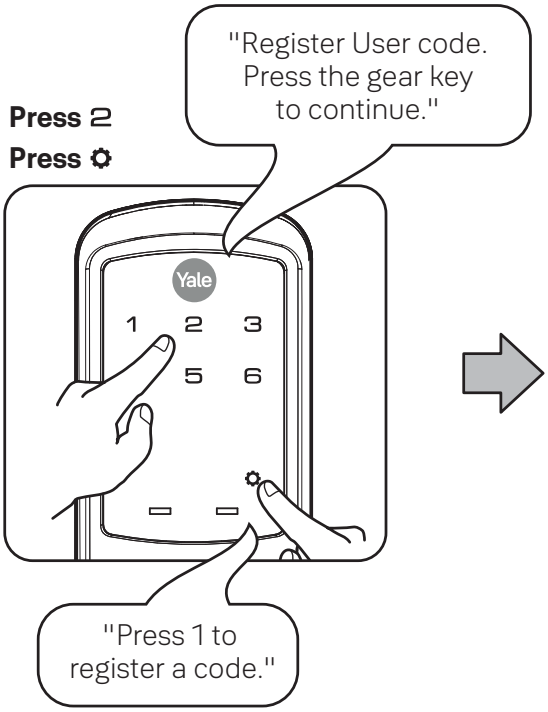

Press 1

Press ⚙

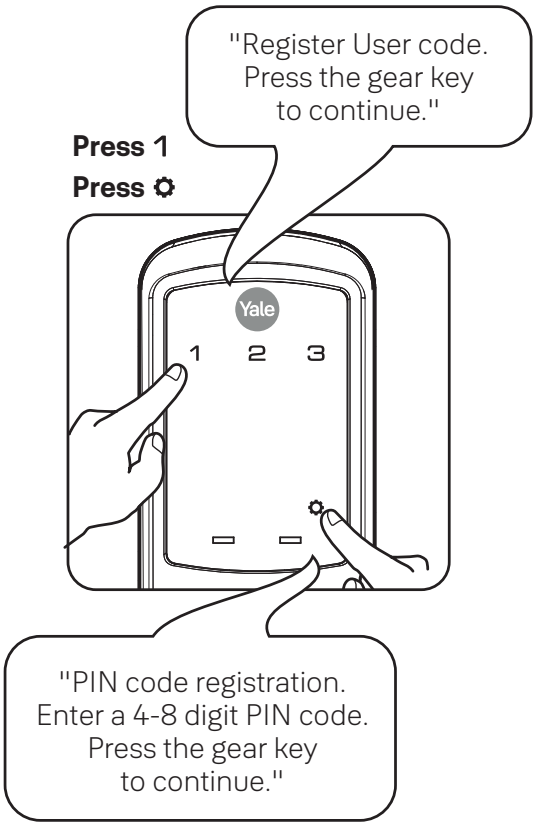

2b Creating User PIN Codes con't

Enter 4-8 digit PIN code followed by ✿

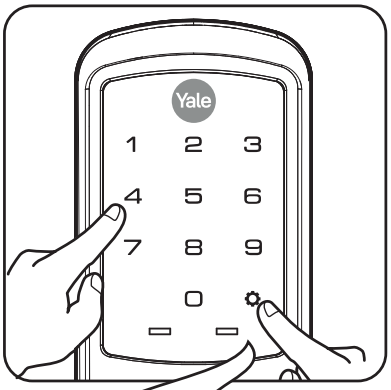

"Registered.
Press the check key to complete. Press the gear key to continue."

Adding more User Codes:

Press ✿
Enter 4-8 digit PIN code
Press ✿

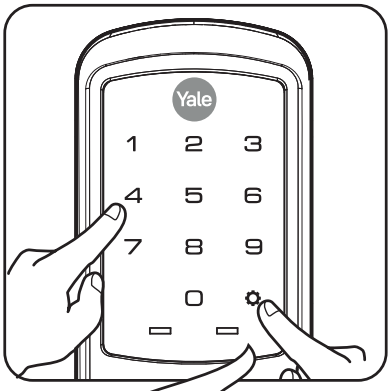

"Registered.
Press the check key to complete. Press the gear key to continue."

To end programming:

Press ✓

"Completed."

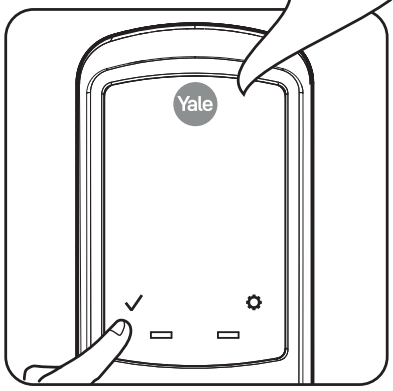

3 Locking & Unlocking Door with Registered Master or User PIN Code

The Yale Accentra Key module enables access with physical (cards and fobs) and mobile credentials ONLY. Creation and use of User PIN codes are disabled. Master PIN code is only used for programming and configuring lock with Yale Accentra Multi-Family configuration app and will not unlock door. When lock is configured into Accentra, "#2" and "#6" will no longer be visible when in "menu" mode.

Activate Lock

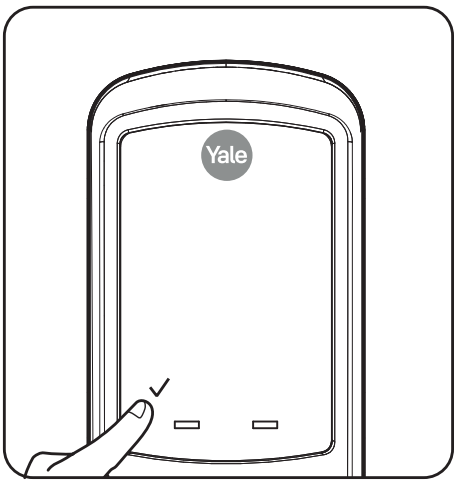

Enter PIN Code

Press ✓

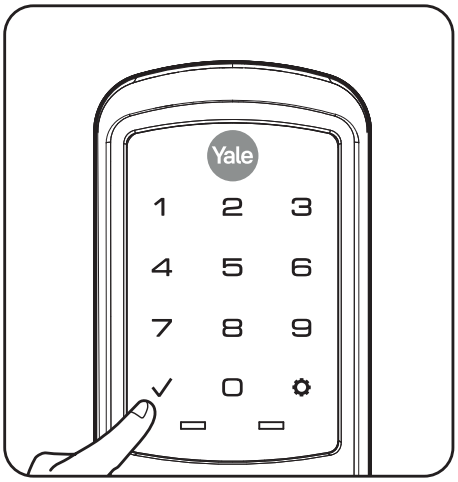

Testing Outside Lever Operation

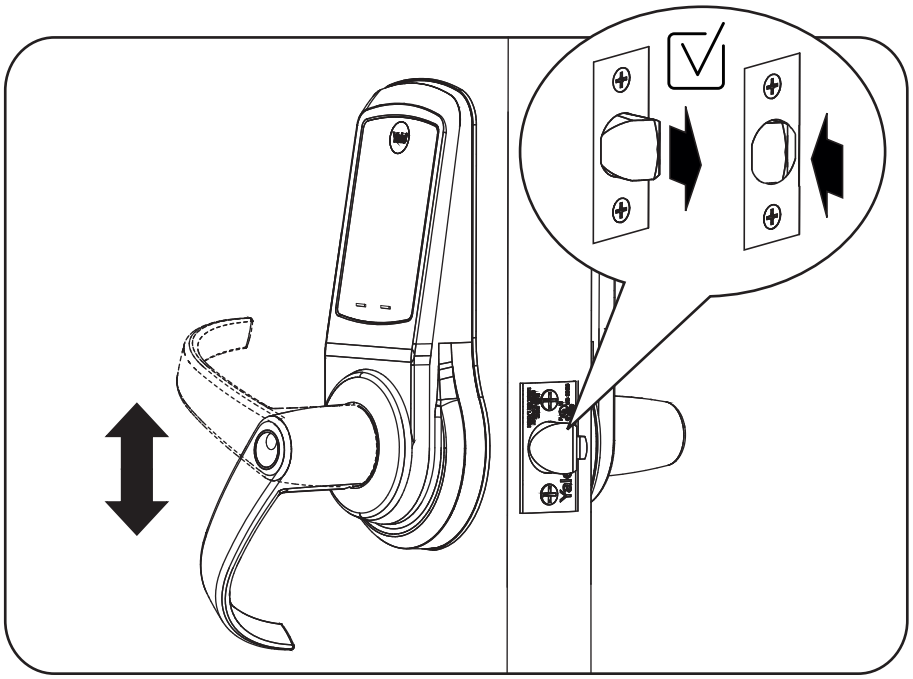

4 Locking Door with Privacy Button

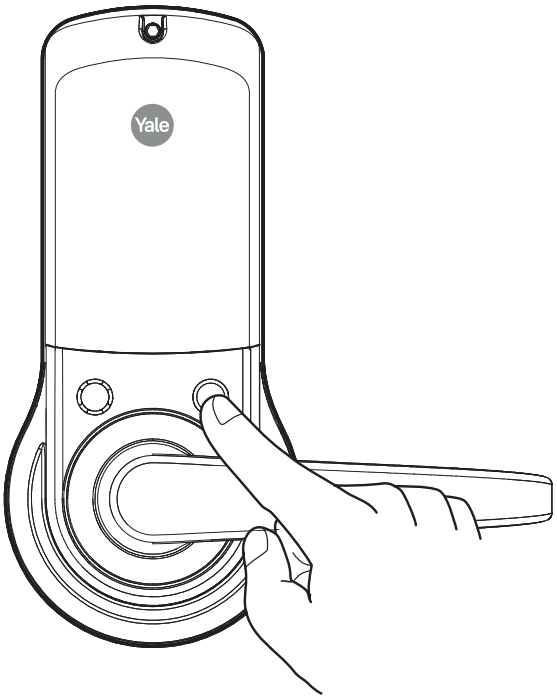

Resetting Lock to Factory Default

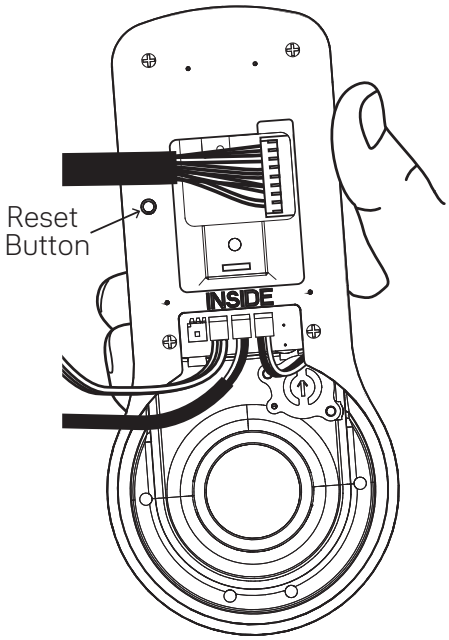

Inside Lock

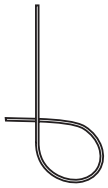

Lever Removal Tool

Hex Wrench

When lock is reset to factory defaults all PIN codes (including the Master PIN code*) are deleted and all programming features are reset to original default settings (see Factory Settings).

IMPORTANT: The Reset Button is located on Inside Lock. The keypad remains assembled.

1. Remove inside lever with the supplied lever removal tool.
2. Remove the battery cover with supplied hex wrench and then remove batteries.
3. Remove network module if installed.
4. Remove the 10-32 x 3/4" pan head screw from the center of the battery housing.
5. Remove the inside lock from the door to access the reset button on back of inside lock. Cables may stay connected. (See illustration above for location of the reset button.)
6. Reinstall four (4) AA batteries.
7. Press the reset button for 3 seconds.
8. While continuing to press the reset button, temporarily remove one (1) AA battery.
9. Reinstall the battery.
10. Release reset button and wait approximately 15 seconds. Speaker will announce "Welcome to Yale."
11. Reassemble inside lock and lever.
12. If utilizing a network module, remove batteries. Insert module. Reinstall batteries.

Upon reset, Master PIN Code creation is the only option available and must be performed prior to any other programming of the lock.

Definitions

All Code Lockout Mode: This feature is enabled by the Master PIN code. When enabled, it restricts all user (except Master) PIN code access. When attempting to enter a code while unit is in Lockout, there will be an audible lock response. The touchscreen keypad will display a RED locked padlock.
(Main Menu selection #6.)

Automatic Re-lock Time: After a successful unlock, unit will re-lock automatically after 3 seconds or for a duration selected in Advanced Lock Settings (Main Menu selection #3 then #1).

Eco Mode: When enabled, Eco Mode puts unit in low power mode extending life of battery.

Language Setting Mode: Choose English (1), Spanish (2) or French (3) for lock's voice prompts. (Main Menu selection #5.)

Low Battery: When battery power is low, the Low Battery Warning indicator is a flashing red battery icon on the touchscreen keypad and the Yale logo will flash red on the push button keypad. If battery power is completely lost, use 9Volt battery override. To use 9V battery override apply 9V battery, in either direction, to terminals on the keypad for backup power option. Activate the lock and enter your pin code to unlock door.

Master PIN Code: The Master PIN code is used for programming and for feature settings. **It must be created prior to programming the lock.** The Master PIN code will also unlock/lock the lock except when configured to Accentra system.

Network Module Setting: With optional Network Module installed, this setting becomes available (Main Menu selection #7 or #0 with Accentra Module) and allows the lock to connect with a network controller.

One Touch Locking: When unit is unlocked, activating the lock will lock unit (during Automatic Re-lock duration or when Automatic Re-lock is disabled). When One-Touch Re-lock is **not** in use **(disabled)**, any valid PIN code will re-lock the lock. (Main Menu selection #3 then #3.)

Passage PIN Code: When used to unlock, lock will remain unlocked/open. Lock cannot be locked/secured until Passage code is entered again.

Privacy Button to Lock Door: A press of this button will lock the door.

Privacy Mode: With optional Door Position Switch installed, Privacy Mode enabled thru Menu Mode and door closed, all keypad functions can be disabled with a press of the Privacy Button. Privacy Mode is disabled by default. Enable Privacy Mode thru Main Menu selection #3 then #4. With door closed, press and hold the privacy button until voice prompt indicates Privacy Mode is enabled. Privacy Mode duration ends when door is opened and voice prompt indicates Privacy Mode is disabled.

Shut Down Time: Unit will shut down for sixty (60) seconds and not allow operation after wrong code entry limit (5 attempts) has been met. When unit is in Shut down, the keypad will be flashing.

Tamper Alert: Audible alarm sounds if attempting to forcibly remove outside lock from door.

User PIN Code: The User code operates the lock. Maximum number of user codes is 500.

Volume Setting Mode: The volume setting for PIN code verification is set to **HIGH (1)** by default; otherwise it can be set to **Low (2)** or **Silent (3)** for quiet areas. (Main Menu selection #4.)

Wrong Code Entry Limit: After five (5) unsuccessful attempts at entering a valid PIN code, the lock will not accept a PIN code for the duration of the shut down time. The touchscreen keypad will flash, and a red padlock symbol will be at the bottom of the keypad. The push button keypad will flash and the Yale icon will flash blue for the shut down period. The keypad will be available after the shut down time is complete.

Feature Programming Through Menu Mode Using Master PIN code*

1. Activate the lock.
2. Enter 4-8 digit master PIN code* followed by ⚙ key.
   Lock Response: "Menu mode, enter number (Enter digit corresponding to the function to be performed), press the ⚙ key to continue."
3. Follow the voice commands.
4. Press ✓ key to complete the process and conclude the programming session.

*The Master PIN code must be created prior to any other programming of the lock.

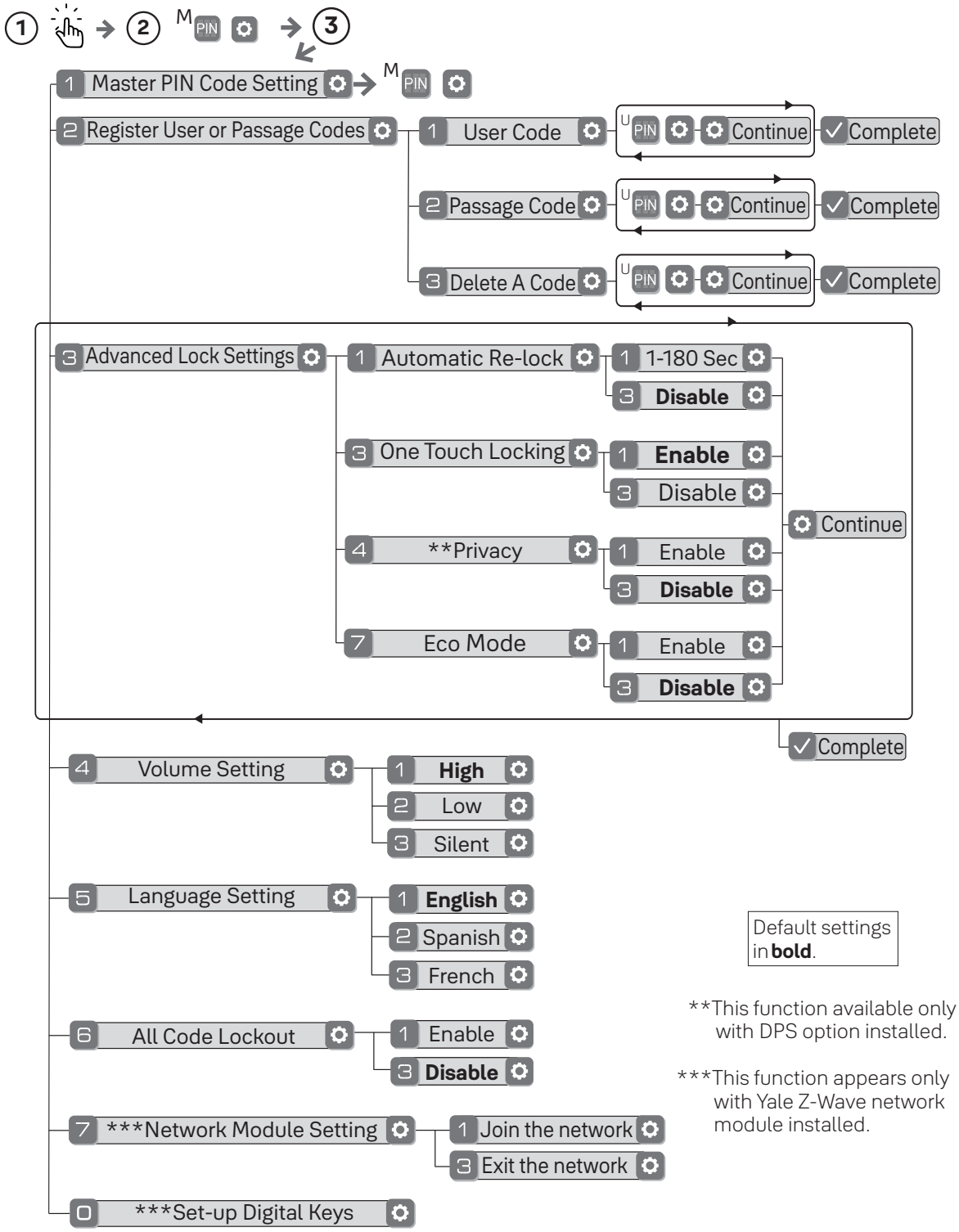

Default settings in **bold**.

**This function available only with DPS option installed.

***This function appears only with Yale Z-Wave network module installed.

Programming Troubleshooting

Symptom	Suggested Action
Lock does not respond. There are no lights or chimes and there is no mechanical sound indicating latchbolt movement.	Touchscreen models become active by pressing Yale logo or ✓ key or by touching keypad with whole hand. Push Button models become active when any key is pressed. • Check batteries are installed and oriented correctly (polarity). • Replace batteries. • Check that cables are fully connected on inside lock and not crimped. • Apply 9V battery to terminals on the keypad for emergency power jump option.
Lock wakes but does not respond. Lights dim.	• Batteries do not have enough power. Replace batteries.
Lock chimes to indicate code acceptance, but door will not open.	• Check for another locking device on the door (i.e. deadbolt). • Check the door gaps for any foreign objects between door and frame. • Check that the motor cable is firmly connected into the PC board marked "MOTOR" on inside lock.
Lock operates to allow access, but will not automatically re-lock.	• Ensure Auto Re-lock Mode is enabled by Master user. • Replace batteries. • Ensure Passage PIN code was not used for access.
User/Passage PIN codes will not register.	• Master user creates/manages User and Passage PIN codes. • PIN codes must consist of 4 to 8 digits to register. • PIN code may already be registered. • Check to see if a yellow Accentra Key module is installed. PIN codes are disabled when Accentra is installed. • PIN codes must be entered within 20 seconds (while keypad is active) or process will have to be restarted. • Check ✓ or gear ⚙ cannot be used as part of the PIN code.
Upon entering a User/Passage PIN code and pressing the ✓ key, the lock chimes an error or lock times out without responding.	• Ensure All Code Lockout Mode is disabled by Master user. Touchscreen will display a red padlock on keypad. • The digits entered were incorrect or incomplete. Re-enter 4-8 digits followed by the check ✓ key. • Master user may have deleted PIN code. • PIN code may have expired. • Check to see if a yellow Accentra Key module is installed. PIN codes are disabled when Accentra is installed. • PIN codes must be entered within 20 seconds (while keypad is active) or process will have to be restarted.
TS lock displays "Low Battery" on keypad. PB lock Yale logo flashes red.	• This is the alert to replace the batteries. Replace all four (4) batteries with new AA Alkaline batteries.
The lock operates, but it does not chime.	• Ensure Volume is set to Low or High by Master user.
Lock will not enter Privacy Mode.	• Ensure Privacy Mode is enabled by Master user. • Ensure door gap is correct.

NOTE: When batteries are replaced, Network Module locks have a real time clock that will be set through the User Interface (UI); it is recommended to verify correct date and time particularly those locks operating under Daylight Saving Time (DST).

Hardware Troubleshooting

Cycle lock in both the locked and unlocked positions. If problems are found:

Door is binding. a. Check that door and frame are properly aligned and door is free swinging. b. Check hinges: They should not be loose or have excessive wear on knuckles.
Latchbolt will not deadlock. a. Either strike is out of alignment or the gap between door and jamb is too great. Realign strike or shim strike out towards flat area of latchbolt.
Latchbolt does not retract or extend properly. Latchbolt tail and retractor are not properly positioned: a. Remove lockset. Look through 2-1/8" hole and verify latchbolt tail is centered between top and bottom of hole. b. Remove latchbolt and insert lockset. Look through latchbolt hole and verify retractor mouth is centered in hole. If not, adjust outside rose plate. c. If necessary, rebore holes to line up retractor and tail.

Factory Settings

Settings	Factory Setting
Master PIN Code	Creation **required***
All Code Lockout Mode	Disabled
Automatic Relock	3 Seconds
Language	English**
One Touch Locking	Enabled
Privacy Setting	Disabled
Shutdown Time	60 Seconds
Wrong Code Entry Limit	5 Times
Volume Setting	High

*The Master PIN code must be created prior to any other programming of the lock.

**Language retains chosen setting even when lock is reset to factory default.

FCC:
This device complies with part 15 of the FCC Rules. Operation is subject to the following two conditions: (1) This device may not cause harmful interference, and (2) this device must accept any interference received, including interference that may cause undesired operation.

Any changes or modifications (including the antennas) to this device that are not expressly approved by the manufacturer may void the user's authority to operate the equipment.

Note : This equipment has been tested and found to comply with the limits for a Class B digital device, pursuant to part 15 of the FCC Rules. These limits are designed to provide reasonable protection against harmful interference in a residential installation This equipment generates, uses and can radiate radio frequency energy and, if not installed and used in accordance with the instructions, may cause harmful interference to radio communications, However, there is no guarantee that interference will not occur in a particular installation. If this equipment does cause harmful interference to radio or television reception, which can be determined by turning the equipment off and on, the user is encouraged to try to correct the interference by one or more of the following measures:

- Reorient or relocate the receiving antenna.
- Increase the separation between the equipment and receiver.
- Connect the equipment into an outlet on a circuit different from that to which the receiver is connected.
- Consult the dealer or an experienced radio/TV technician for help.

Modifications not expressly approved by the manufacturer could void your authority to operate the equipment under FCC rules.

Industry Canada:
This device contains licence-exempt transmitter(s)/receiver(s) that comply with Innovation, Science and Economic Development Canada's licence-exempt RSS(s). Operation is subject to the following two conditions:

(1) This device may not cause interference.

(2) This device must accept any interference, including interference that may cause undesired operation of the device.

L'émetteur/récepteur exempt de licence contenu dans le présent appareil est conforme aux CNR d'Innovation, Sciences et Développement économique Canada applicables aux appareils radio exempts de licence. L'exploitation est autorisée aux deux conditions suivantes :

(1) L'appareil ne doit pas produire de brouillage;

(2) L'appareil doit accepter tout brouillage radioélectrique subi, même si le brouillage est susceptible d'en compromettre le fonctionnement.

FCC and IC RF Radiation Exposure Statement:
This equipment complies with FCC and IC RF Radiation exposure limits set forth for an uncontrolled environment.

This device and its antenna must not be co-located or operating in conjunction with any other antenna or transmitter.

RF du FCC et IC d'exposition aux radiations: Cet équipement est conforme à l'exposition de FCC et IC rayonnements RF limites é-tablies pour un environnement non contrôlé.

L'antenne pour ce transmetteur ne doit pas être même endroit avec d'autres émetteur sauf conformément à FCC et IC procédures de produits Multi-émetteur.

Support Contacts:

Customer Service Phone:
1-800-438-1951
Customer Service Fax:
1-800-338-0965
24/7 Support Phone:
1-855-213-5841
24/7 Support Email:
Support@YaleLock.com
Website:
US.YaleHome.com
Email for orders:
orders.yaleres@assaabloy.com

THE YALE BRAND, with its unparalleled global reach and range of products, reassures more people in more countries than any other consumer locking solution.

THE ASSA ABLOY GROUP is the world´s leading manufacturer and supplier of locking solutions, dedicated to satisfying end-user needs for security, safety and convenience.

Yale Commercial is a business associated with ASSA ABLOY Access and Egress Hardware Group, Inc., an ASSA ABLOY Group company. Copyright © 2017 - 2021, ASSA ABLOY Access and Egress Hardware Group, Inc. All rights reserved. Reproduction in whole or in part without the express written permission of ASSA ABLOY Access and Egress Hardware Group, Inc. is prohibited.

ASSA ABLOY

The global leader in door opening solutions

Yale Locks

Z-Wave Plus ™ v2 System Integrators Guide

Yale NexTouch Cylindrical Commercial Grade Lever Locks

NTB612-ZW3, NTB622-ZW3, NTB632-ZW3, NTB642-ZW3

Document Revision: 1.2

April 2023

Contents

Revision History 4
Yale Z-Wave Plus ™ Product Info 5
Network Operations 5
Enroll/Add device to network (SmartStart) 5
Enroll/Add device to network (Classic Inclusion Mode) 5
Un-enroll/Remove device from network (Exclusion Mode) 5
Factory Reset 6
Supported Command Classes 6
Command Class Z-Wave Plus ™ Info, Version 2 6
Command Class Manufacturer Specific, Version 2* 7
Command Class Security, Version 1 7
Command Class Security 2, Version 1 7
Command Class Device Reset Locally, Version 1* 8
Command Class Power Level, Version 1* 8
Command Class Version, Version 3* 8
Command Class Battery, Version 1* 9
Command Class Door Lock, Version 4* 10
Command Class Door Lock Logging, Version 1* 10
Command Class Schedule Entry Lock, Version 3* 10
Command Class User Code, Version 2* 10
Command Class Time Parameters, Version 1* 14
Command Class Time, Version 2 14
Command Class Firmware Update Meta Data, Version 5* 15
Command Class Association, Version 2* 16
Command Class Multi Channel Association, Version 3* 16
Command Class Association Group Info, Version 3* 17
Command Class Notification, Version 8* 19
Command Class Configuration, Version 4* 22
Command Class Application Status, Version 1 25
Command Class Transport Service, Version 2 25
Command Class Supervision, Version 1 25

Command Class Indicator, Version 3* 25
Command Class Basic, Version 2* 25

* This command class requires security.

Revision History

Rev.	Details
1.0	Initial Release
1.1	Added description of what other features are affected when Passage Mode is enabled.
1.2	Fixed Minimum value for Auto Relock Time and fixed Default Value for Auto Relock Feature; Removed Inside LED Column for Indicator CC since this lock does not have Inside LED.

Yale Z-Wave Plus ™ Product Info

Manufacturer ID: ASSA ABLOY (0x0129)

Z-Wave™ Device Type: Door Lock Keypad

Z-Wave™ Role Type: Listening Sleeping Slave (LSS)

Network Operations

Enroll/Add device to network (SmartStart)

SmartStart enabled products can be added into a Z-Wave™ network by scanning the Z-Wave™ QR Code present on the product with a controller providing SmartStart inclusion. No further action is required and the SmartStart product will be added automatically within 10 minutes of being switched on in the network vicinity.

- Open the Z-Wave™ system's smart home app via smartphone or tablet and follow the in-app prompts to add a new device.
- SmartStart works when the Z-Wave™ system has the DSK saved and one of the following are true:
  - The lock has the minimum Lock firmware version AND is in a factory-reset state:
    - NTB612/622/632/642: v3.2.58
  - An internal key has already been established.

Enroll/Add device to network (Classic Inclusion Mode)

- Enter the 4–8-digit Master PIN code followed by the ⚙ key.
- Press the 7 key followed by the ⚙ key.
- Press the 1 key followed by the ⚙ key.
- Scan the QR code, if prompted, or…
- Enter the first five (5) digits of the DSK if prompted.

Un-enroll/Remove device from network (Exclusion Mode)

- Enter the 4–8-digit Master PIN code followed by the ⚙ key.
- Press the 7 key followed by the ⚙ key.
- Press the 3 key followed by the ⚙ key.

When the Yale lock is unenrolled/excluded from the network through the device menu mode, any changes previously made to the user code database and configuration settings will be retained, as opposed to set back to defaults.

Factory Reset

- Factory resetting the lock with the Z-Wave™ module installed will clear the Z-Wave™ network settings, causing the device to be removed from the network.
- The following is the method of performing a factory reset:
    1. Manual factory reset, via power cycle while holding button on inside lock escutcheon
        - See the Lock Installation Manual for details.
        - Please use the manual factory reset procedure only when the network primary controller is missing or otherwise inoperable.

Supported Command Classes

The Yale Assure Z-Wave Plus ™ lever locks follow the Z-Wave™ Command Class Specifications for all command classes that are implemented. Please refer to these specifications for specifics on how each command class works. The supported command classes are listed below, and certain sections contain details about operations that may be specific to the Yale lock. If a section is blank, then please refer to the Z-Wave™ specifications.

As a secure device, most of the command classes supported by the lock are required to be sent securely with Z-Wave™ security. During enrollment, the controller can use the Security Command Class to get this list directly from the lock. If a command class requires security, it is also indicated as such below.

Specification used: Z-Wave™ Specifications Release Dec 2021 BCD

Command Class Z-Wave Plus ™ Info, Version 2

The Z-Wave Plus ™Info command class reports the following information:

- Role Type: Slave Sleeping Listening (0x07)
- Node Type: Z-Wave Plus ™ Node (0x00)
- Installer Icon Type: 0x0300
- User Icon Type: 0x0300

Command Class Manufacturer Specific, Version 2*

* This command class requires security.

The Manufacturer Specific command class reports the following information:

- Manufacturer ID: 0x0129
  - This is the manufacturer ID assigned to ASSA ABLOY.
- Product ID:
  - The Product ID can be used to differentiate between hardware platforms, as well as between ZW2 and ZW3. See Table 1 - First 2 Digits of Product ID, below, for details.
  - Product IDs for the locks covered in this document are as follows:
    - 0x4B0C for NTB612-ZW3 or Default ID for NTB Push button Lock (2nd Generation Keyed Push Button interface)
    - 0x4B16 for NTB622-ZW3 or Default ID for NTB Touch Screen Lock (2nd Generation Keyed Touch Screen interface)
    - 0x4B20 for NTB632-ZW3 (2nd Generation Keyless Push Button interface)
    - 0x4B2A for NTB642-ZW3 (2nd Generation Keyless Touch Screen interface)
- Product Type ID:
  - 0x8101 for NTB612/622/632/642-ZW3 (2nd Generation Cylindrical lock)

Table 1 - First 2 Digits of Product ID

	Z-Wave™ Type			Platform					Hex Value
[0x8101]-ZW2	0	0	0	0	1	0	1	1	0x0B
[0x8101]-ZW3	0	1	0	0	1	0	1	1	0x4B

Command Class Security, Version 1

This command class has been implemented per the Z-Wave™ Specification.

Command Class Security 2, Version 1

This command class has been implemented per the Z-Wave™ Specification.

Command Class Device Reset Locally, Version 1*

* This command class requires security.

The Yale door locks covered in this guide can be reset to their factory default settings by manually resetting the lock by following the procedure outlined in the specific lock's manual.

Upon factory reset, all Z-Wave™ network settings are cleared, all the user codes are erased from the lock (including the master code), and all configurable settings are reset to default values, except for the language setting. A factory reset leaves the lock in a completely unsecure state (waiting for master code to be set), so care should be taken if using the configuration parameter to perform a remote reset. However, if the DUT is unenrolled/excluded from the network through the device menu mode, then the user code database and configuration settings will not be reset to the defaults.

Command Class Power Level, Version 1*

* This command class requires security.

This command class has been implemented per the Z-Wave™ Specification.

The Power Level command class was implemented to allow controllers to set the transmit power for the door lock. This could be useful in large networks with many nodes, so that the lock can find working routes back to the controller while transmitting at a lower power. This ensures robust routes when the normal transmit power level is restored.

Currently there is no way to initiate a low power enrollment; this command class can only be used once the lock is enrolled successfully.

Command Class Version, Version 3*

* This command class requires security.

The Yale Real Living locks are a multi-processor system with 1 additional firmware target. All processors can be updated through the Firmware Update Meta Data command class. The firmware targets are numbered as follows:

- Firmware Target 0 = Z-Wave™ Chip
- Firmware Target 1 = Lock Processor

To identify the firmware version for each target, the hex data in the firmware version report must be converted to decimal prior to combining major and minor version into the full version.

After a controller sends a Version Get command the log will display the Version Report similar to the below:

```
Send VERSION_GET to node 16 started
Send VERSION_GET to node 16 completed in 00:00:01.242
Rx [S2_ACCESS] VERSION_REPORT(86 12) + 03 07 10 02 22 02 01 2C 00
```

The above Version Report will be defined as this in the Z-Wave™ sniffer tool, Zniffer:

```
Command Class Version ver.3
Version Report
    Z-Wave Library Type:          0x03
    Z-Wave Protocol Version:      0x07
    Z-Wave Protocol Sub Version:  0x10
    Firmware 0 Version:           0x02
    Firmware 0 Sub Version:       0x22
    Hardware Version:             0x02
    Number of firmware targets:   0x01
  ▾ vg 1:                         2C 00
      Firmware Version:             0x2C
      Firmware Sub Version:         0x00
```

For Firmware Target 0, the Firmware 0 Version (0x02) and Sub version (0x22) translate to module firmware decimal value of “2.34”.

For Firmware Target 1 (the data under vg1), Firmware Version (0x2C) and Sub version (0x00) translate to lock firmware decimal value of “4.3.00”.

Command Class Battery, Version 1*

* This command class requires security.

Per the Z-Wave Plus ™ Specification, the lock will send a Battery Report with a value of 0xFF to the Lifeline node when a critical battery level is reached (starting at about 4.2V for Product Type ID 0x8101). In addition, the Yale Locks provide 2 earlier low battery alarms through the notification command class (see Table 7 - Notification Table).

Low battery alarms will be generated if the lock is in a low battery state during one of the following events: any motor activation (keypad lock/unlock, RF lock/unlock, etc.), controller sends Get Battery command, or the unsolicited battery report was triggered. Yale locks will generate an unsolicited Battery Report every 8 hours if a node is listed in the Lifeline Group.

Command Class Door Lock, Version 4*

* This command class requires security.

Yale Z-Wave Plus ™ locks support three door lock modes: Door Secured (0xFF), Door Unsecured (0x00), and Door Unsecured with timeout (0x01). When Auto Relock is enabled, the lock will automatically relock after all unlock events. Yale Z-Wave Plus ™ locks do not support any of the "Door Unsecured for outside Door Handles" (0x20, 0x21) or "Door Unsecured for inside Door Handles" (0x10, 0x11) modes.

Command Class Door Lock Logging, Version 1*

* This command class requires security.

This command class has been implemented per the Z-Wave™ Specification.

Command Class Schedule Entry Lock, Version 3*

* This command class requires security.

Yale locks support Year Day Schedule types and Daily Repeating Schedule types. Yale locks allow the controller to apply multiple schedules to a single user. Each user has 1 Year Day Schedule slot (Slot ID 1) and 7 Daily Repeating slots (Slot IDs 1 – 7). If user scheduling is used in the lock, then the controller **MUST** set the lock's time using the Time Parameters command class.

Command Class User Code, Version 2*

* This command class requires security.

Versions 1 and 2 of this command class can address user code slots 1 through 250 via the User Code Set/Get/Report commands. Version 2 of this command class also includes extended versions of each of these commands, used to address the extended range of users.

Table 2 – Expected Reports for Set/Get Commands

Command	Slots 1-250	Slot 251	Slots 252-254	Slot 255	Slots 256-500
User Code CC v1/v2: User Code Get	User Code Report	User Code Report	User Code Report	User Code Report	N/A
User Code CC v1/v2: User Code Set	User Code Report	Master Code Report	User Code Report	User Code Report	N/A
User Code CC v2: Extended User Code Get	Extended User Code Report	Extended User Code Report	Extended User Code Report	Extended User Code Report	Extended User Code Report
User Code CC v2: Extended User Code Set	Extended User Code Report	Extended User Code Report	Extended User Code Report	Extended User Code Report	Extended User Code Report

The master code can be accessed (read/write) using slot 251 (0xFB), if using version 1 of this command class. For version 2, the Master Code Set/Get/Report commands must be used.

Yale locks do not support bulk commands (setting or getting multiple user codes at once) or CRC functionality for this command class.

It should be noted that the lock's operation mode (called "User Code Keypad Mode" in this command class) can be modified through Version 2 of this command class, or through parameter 8 of the Configuration command class. This is the only parameter that can be modified through more than one command class.

The following implementation notes apply specifically to non-access user codes:

- The usage of non-access users has changed slightly with ZW3, compared to ZW2, but is still backwards compatible. If a User Code Set is transmitted using version 1 of the command class, then the lock will accept a value of 0x04 as the status for the non-access user.
- Previously, a value of 0x04 was reserved for setting non-Access users, as stated above. When using version 2 of this command class, a non-Access (now called "Messaging") user ID status is assigned a value of 0x03. This value of 0x03 should be used with the Extended User Code Set command.
- A non-access user can be identical to a "normal" PIN code, aside from the fact that it does *not* grant access.
- Any available user code slot (except the master code) can be used to store a non-access user code.
- Schedules can be applied to non-access users.

Yale locks support the following User ID Status values:

Table 3 - User ID Status User Code CC v1 vs v2

User ID Status	**User Code CC v1 Set**	**User Code CC v1 Report Value**
Description	*Value*	*Value*
Available	0x00	0x00
Enabled / Grant Access	0x01	0x01
Disabled	0x02	0x03
	0x03	
Messaging: The user code is accepted, but the lock does not grant access to the user. Instead, it generates an alarm to the Lifeline and does NOT take preventative actions for further attempts to enter the User ID and/or User Code.	0x04	0x04
One-Time Use: This PIN is disabled immediately after being used for a successful unlock operation.	0x06	0x06
Expiring: This PIN is disabled once a specified amount of time has passed after being used for a successful unlock operation. The expiration time is set through the Configuration command class.	0x07	0x07

User ID Status	User Code CC v2: Extended User Code Set	User Code CC v2: Extended User Code Report Value
Description	*Value*	*Value*
Available	0x00	0x00
Enabled / Grant Access	0x01	0x01
Disabled	0x02	0x02
Messaging: The user code is accepted, but the lock does not grant access to the user. Instead, it generates an alarm to the Lifeline and does NOT take preventative actions for further attempts to enter the User ID and/or User Code.	0x03	0x03
One-Time Use: This PIN is disabled immediately after being used for a successful unlock operation.	0x06	0x06
Expiring: This PIN is disabled once a specified amount of time has passed after being used for a successful unlock operation. The expiration time is set through the Configuration command class.	0x07	0x07

Command Class Time Parameters, Version 1*

* This command class requires security.

The controller must set the Time Parameters in the lock anytime the lock loses power. If the time is not set by the controller, then user codes with schedules applied to them cannot be granted access. When the lock is powered up, it will generate a Notification Report to indicate to the controller that power has been applied (Alarm V1 Type = 0x82, Alarm V1 Level = 0x00, Event Type = 0x08, Event Value = 0x01). This indicates to the controller that the lock no longer has a valid time set.

If the controller does not support either the Time CC or Time Parameters CC, then scheduled users will not have access.

Command Class Time, Version 2

The controller must set the Time Parameters in the lock anytime the lock loses power. Even though the Time CC is not secure, the Time Set command must be issued at the same or higher security level as when the device was enrolled in order for time to be set otherwise it will be rejected by the device. If the time is not set by the controller, then user codes with schedules applied to them cannot be granted access. When the lock is powered up, it will generate a Notification Report to indicate to the controller that power has been applied (Alarm V1 Type = 0x82, Alarm V1 Level = 0x00, Event Type = 0x08, Event Value = 0x01). This indicates to the controller that the lock no longer has a valid time set.

If the controller does not support either the Time CC or Time Parameters CC, then scheduled users will not have access. A time sync should occur every 8 hours, starting with the Time CC. If there is no response within a minute, the next step is to issue a Time Parameters Get to sync time.

Command Class Firmware Update Meta Data, Version 5*

* This command class requires security.

Yale Z-Wave Plus ™ locks support over-the-air (OTA) upgrading of 2 firmware targets:

1. Firmware Target 0: Z-Wave™ chip
2. Firmware Target 1: The lock main processor

Firmware Target 0 is used to determine the correct Z-Wave™ processor image to download. ID 1 is always 0xA5, to signal this is an ASSA ABLOY Z-Wave™ image, and ID 2 is specific to the region, with the lower nibble being 0x0 and the upper nibble being the value in Table 4 - Region-Specific Values for Firmware ID 0. Eventually the lower nibble will be used to separate builds within a specific region, but this will also be 0 for now, since there is only a single build of firmware.

Table 4 - Region-Specific Values for Firmware ID 0 (Upper Nibble)

Region	Value
ANZ	0x1
CN	0x2
EU	0x3
HK	0x4
IL	0x5
IN	0x6
JP	0x7
KR	0x8
RU	0x9
US	0xA

Firmware 1 target will depend on which version of the lock is in use (mapped to the Product Type ID).

- For NTB612/622/632/642-ZW3 (2nd Generation Cylindrical lock), Firmware 1 ID = 0x8101

After an OTA is performed (a Firmware Update Status Report should return with successful), there is an additional step internally where we write/apply the image to the lock/module. When the image is being applied to the lock, the lock is unresponsive until completion of the apply image. Once the completion of the OTA image is applied the lock silently reboots.

The following is the time it takes for each product to complete OTA image apply phase:

- For Z-Wave™ Radio Chip, ~10 seconds
- For NTB612/622/632/642-ZW3 (2nd Generation Cylindrical lock), ~23 minutes

Command Class Association, Version 2*

* This command class requires security.

This command class has been implemented per the Z-Wave™ Specification.

Command Class Multi Channel Association, Version 3*

* This command class requires security.

This command class has been implemented per the Z-Wave™ Specification.

Yale locks support only one group, which can contain up to 5 nodes.

Command Class Association Group Info, Version 3*

* Command Class Requires Security

Yale locks support the Lifeline Association Group.

Table 5 - Association Table

Group ID	Maximum Nodes	Description	Commands

1	5	Lifeline	• Command_Class Battery
			  ○ Battery_Report
			• Command_Class_Configuration
			  ○ Configuration_Report
			• Command_Class_Notification
			  ○ Notification_Report
			• Command_Class_Door_Lock
			  ○ Door_Lock_Operation_Report
			  ○ Door Lock Configuration Report
			• Command_Class_Device_Reset_Locally
			  ○ Device_Reset_Locally_Notification
			• Command_Class_User_Code
			  ○ User Code Report
			  ○ Extended User Code Report
			  ○ User Code Keypad Mode Report
			  ○ Master Code Report

The following are the actions to trigger the reports:

Table 6 – Lifeline Report Trigger Table

Report Command	**RF Trigger**	**Manual Trigger**
Battery Report	Any RF Lock Operation when lock is under the battery thresholds	Any manual/keypad Lock Operation when lock is under the battery thresholds or Power Cycle Lock
Configuration Report	Configuration Set	Change Lock Settings via Keypad
Notification Report (Access Control)	Any RF Lock Operation	Manual or Keypad Unlock/Lock
Notification Report (Power Management)	Any RF Lock Operation when lock is under the battery thresholds	Any manual/keypad Lock Operation when lock is under the battery thresholds or Power Cycle Lock
Door Lock Operation Report		Manual or Keypad Unlock/Lock
Door Lock Configuration Report	Door Lock Configuration Set	Enable/Disable Auto-Relock Feature via Keypad
Device Reset Locally Notification		HW Factory Reset
User Code Report	Add/Delete User Code via User Code Set Command	Add/Delete User Code via Keypad from Slots 1-250
Extended User Code Report	Add/Delete User Code via Extended User Code Set Command	Add/Delete User Code via Keypad from Slots 251-500
User Code Keypad Mode Report	User Code Keypad Mode Set	Enable/Disable Vacation Mode or Privacy Mode (refer to Installation Manual)
Master Code Report	Master Code Set	Update/Modify Master Code via Keypad

Command Class Notification, Version 8*

* This command class requires security.

Table 7 - Notification Table

Alarm Reports	Alarm type	Alarm Level	Description	Notification Type	Event
Keypad Lock	0x12	0x (01 - max users)	Where Alarm level represents user slot number	0x06	0x05
Keypad Unlock	0x13	0x(01-max users)	Where Alarm level represents user slot number (0x00 = Master Code)	0x06	0X06
Manual Lock	0x15	0x01	by key cylinder or inside thumb-turn	0x06	0x01
		0x02	by touch function (lock and leave)	0x06	0x01
		0x03	By inside button	0x06	0x01
RF Operate Lock	0x18	0x01	by RF module	0x06	0x03
RF Operate Unlock	0x19	0x01	by RF module	0x06	0X04
Auto Lock Operate Locked	0x1B	0x01	Auto re-lock cycle complete, locked.	0x06	0x09

User deleted	0x21	0x(01-max users)	User was deleted. Alarm level = user slot number	0x06	0X0D (single)
		0x00	All User codes were deleted		0X0C (all)
Non-Access	0x26	0x(01-max users)	A Non-Access Code was entered at the lock. Where alarm level represents user slot number	0x06	0xFE
Door State	0x2B	0x00	Door is open	0x06	0x16
		0x01	Door is closed	0x06	0x17
		0x02	Door Propped (Door Open for longer than configurable door propped time)	0x06	0xFE
Daily Repeating Schedule Set/Erased	0x60	0x(01-max users)	Schedule(s) has been set/erased for specified user ID	0x06	0xFE
Daily Repeating Schedule Enabled/Disabled	0x61	0x(01-max users)	Daily Repeating Schedule(s) were enabled/disabled for User ID specified in Alarm Level. If Alarm Level = 0xFFFF then all users were affected.	0x06	0xFE
Year Day Schedule Set/Erased	0x62	0x(01-max users)	Schedule(s) has been set/erased for specified user ID	0x06	0xFE
Year Day Schedule Enabled/Disabled	0x63	0x(01-max users)	Year Day Schedule(s) were Enabled/Disabled for User ID specified in Alarm Level. If Alarm Level = 0xFFFF then all users were affected.	0x06	0xFE

All Schedule Types Erased	0x64	0x(01-max users)	All Schedule Types were Set (erased/set) for User ID specified in Alarm Level. If Alarm Level = 0xFFFF then all users were affected.	0x06	0xFE
All Schedule Types Enabled/Disabled	0x65	0x(01-max users)	Schedule(s) has been enable/disabled for specified user ID	0x06	0xFE
Master Code changed	0x70	0x00	Master code was changed at keypad	0x06	0x12
		0x00	Master code was changed over RF	0x06	0x0E
User added		0x(01-max users)	User added. Alarm level = user slot number	0x06	0X0E
Battery is fully charged	0x80	0x05	After a low battery alert was observed, the lock was powered down and powered back up with full battery.	0x08	0x0D
Door Lock needs Time set / RF Module Power Cycled	0x82	0x00	Power to the lock was restored and the locks RTC was cleared. The controller should set the time to ensure proper logging.	0x08	0x01
Disabled user entered at keypad	0x83	0x(01-max users)	A disabled user pin code was entered at the keypad	0x06	0xFE
Valid user but outside of schedule	0x84	0x(01-max users)	A valid user can be both a normal user and a Non-Access user. If a non-access user is out of schedule this alarm will be sent instead of the non-access alarm. Alarm Level represents user slot number.	0x06	0xFE
Tamper Alarm	0xA1	0x01	keypad attempts exceed code entry limit	0x06	0X10
		0x02	front escutcheon removed from main	0x06	0xFE
Low Battery Alarms***	0xA7	0x(Current %)	***Low Battery*** Starting at 4.6V **(for 0x8101)**	0x08	0x0A
	0xA8	0x(Current %)	***Critical Battery Level*** Starting at 4.4V **(for 0x8101)**	0x08	0x0B

** The Yale lock also supports a 3rd low battery alarm: too low to operate. This alarm is sent out as a Battery Report (with value = 0xFF) through the Battery Command Class. This is the last low battery alarm level before the product stops functioning. Starting at 4.2V (0x8101)

Command Class Configuration, Version 4*

* This command class requires security.

Table 8 - Configurable Parameters

Param. Num.	Name	Length	Configuration Properties			Info	Length of Info String (max length allowed is 90)
			Min	Max	Default		
1	Volume	1 byte	0x01 (High Volume)	0x03 (Silent)	0x01 (High Volume)	Set Volume Level to high (1), low (2), or silent (3).	53
2	Auto Relock	1 byte	0x00 (Disable)	0xFF (Enable)	0xFF (Enable)	Set Auto Relock feature to enable or disable.	45
3	Relock time	1 byte	0x01 (1 second)[1]	0xB4 (180 seconds)	0x03 (3 seconds)	Adjust the time your lock will auto relock.	43
4	Wrong Code Entry Limit	1 byte	0x03	0x0A	0x05	Adjust the limit for wrong code entries allowed by your lock.	61
5	Language	1 byte	0x01 (English)	0x03 (French)	0x01 (English)	Set the language to English (1), Spanish (2), or French	60

						(3).	
7	Shut down time	1 byte	0x0A (10 seconds)	0x84 (132 seconds)	0x3C (60 seconds)	Adjust the time your lock is shutdown after reaching its wrong code entry limit.	80
8	Operating mode[2]	1 byte	0x00 (Normal Mode)	0x03 (Passage Mode)	0x00 (Normal Mode)	Set the Operating Mode to normal mode, vacation mode, privacy mode or passage mode.	83
11	One Touch Locking	1 byte	0x00 (Disable)	0xFF (Enable)	0xFF (Enable)	Set One Touch Locking feature to enable or disable.	51
12	Privacy Button	1 byte	0x00 (Disable)	0xFF (Enable)	0x00 (Disable)	Set Privacy Button feature to enable or disable.	48
18	Door Propped Timer[3]	1 byte	0x00 [4] (Disable)	0xFE[4] (2540 seconds)	0x00[4] (Disable)	Adjust the time to receive an alert when the door is propped open.	66
19	DPS Alarms[3]	1 byte	0x00 (Disable)	0xFF (Enable)	0x00 (Disable)	Enable or Disable DPS Alarms	28
21	Eco Mode[5]	1 byte	0x00 (Disable)	0xFF (Enable)	0x00 (Disable)	Enable or Disable Eco Mode feature	34
28	Expiring Pin Code Enabled Time	1 byte	0x00 (Disable)	0xFF (127 Hours)	0x00 (Disable)	Timeout value used to determine time after first entry is triggered.	68

[1] Even know we accept value 0x01 for Auto Relock Time, we limit the lock's minimum to value of 0x03. Therefore, if user tries to set Auto Relock Time to values 0x01 or 0x02 , it will always report back value of 0x03.
[2] When Operation Mode feature is set to Passage Mode, this also results in disabling the following configuration parameters 2 (Auto Relock feature).
[3] Additional hardware required. These parameters are only active if the optional Door Position Switch has been installed with the lock.
[4]The Door Propped value is represented as seconds X 10. (ie a value of 4 would mean a door propped timer of 40 seconds).
[5]Only Supported by Touch Screen models NTB622/642.

Command Class Application Status, Version 1

This command class has been implemented per the Z-Wave™ Specification.

Command Class Transport Service, Version 2

This command class has been implemented per the Z-Wave™ Specification.

Command Class Supervision, Version 1

This command class has been implemented per the Z-Wave™ Specification.

Command Class Indicator, Version 3*

* This command class requires security.

The indicator feature is set by using Indicator ID 0x50 to identify the node and Property ID 0x02 or 0x03, 0x04 and 0x05.

Table 9 – Lock UI for Indicator Set Overview

Indicator Set	Lock Exterior
OFF	Keypad LED is OFF
ON	NTB622/642: Numbers 0-9 on Touch Screen Flash NTB612/632: All buttons Flash

In order to set the Indicator ID 0x50 with Property 0x02, set values to 0x00 for off and 0x01…0x63 or 0xFF for on.

In order to properly set the Indicator ID 0x50 with Properties 0x03, 0x04 and 0x05, we had to map the values to our lock's specific blink rate.

Table 10 – Minimum Values for Indicator Set Property IDs 0x03, 0x04, & 0x05 to trigger Lock UI

Property ID 0x03 (On/Off Periods) Fixed Value	Property ID 0x04 (On/Off Cycles) Minimum Value	Property ID 0x05 (On time within an On/Off period) Fixed Value
0x14*	0x00...0xFF (per Z-Wave™ Spec)	0x0A*

NOTE: If Property IDs 0x03 and 0x05 are set to value other than the above, then the lock will blink at the different number of cycles than what you have set.

Command Class Basic, Version 2*

* This command class requires security.

This command class is mapped to Door Lock CC:

Table 11 – Basic Mapping Overview

Basic Command	Door Lock Mapped Command
Basic Set (Value)	Door Lock Operation Set (Door Lock Mode)
Basic Report (Current Value = 0x00)	Door Lock Operation Report (Door Lock Mode = 0x00)
Basic Report (Current Value = 0xFF)	Door Lock Operation Report (Door Lock Mode > 0x00)

The Basic Get Current Value, Basic Get Duration, and Basic Get Target Value are mapped to Door Lock Operation Get and Basic Set is directly mapped to Door Lock Operation Set where the Duration is returned as is, but the Value and Target Door Lock State Value of the Basic Report use the following mapping:

Table 12 – Basic Report: Value

Value	Level	State	Door Lock State
0 (0x00)	0%	Off	Unsecure
1..99 (0x01...0x63)	1..100%	On	Secure
100..253 (0x64...0xFD)	Reserved	Reserved	
254 (0xFE)	Unknown	Unknown	Unknown
255 (0xFF)	100%	On	Secure