Kaadas

Z-Wave Key Free Keypad Deadbolt KA250-Z

Installation Guide

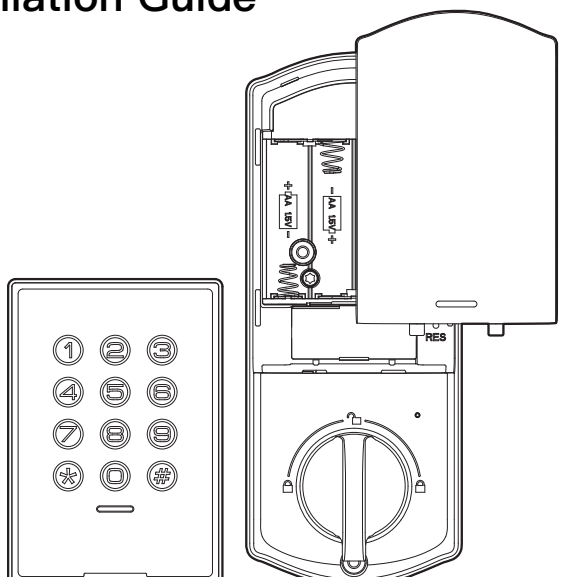

Kaadas reserves all rights for the final interpretation to this instruction

⚠ All design and specifications are subject to change without notice

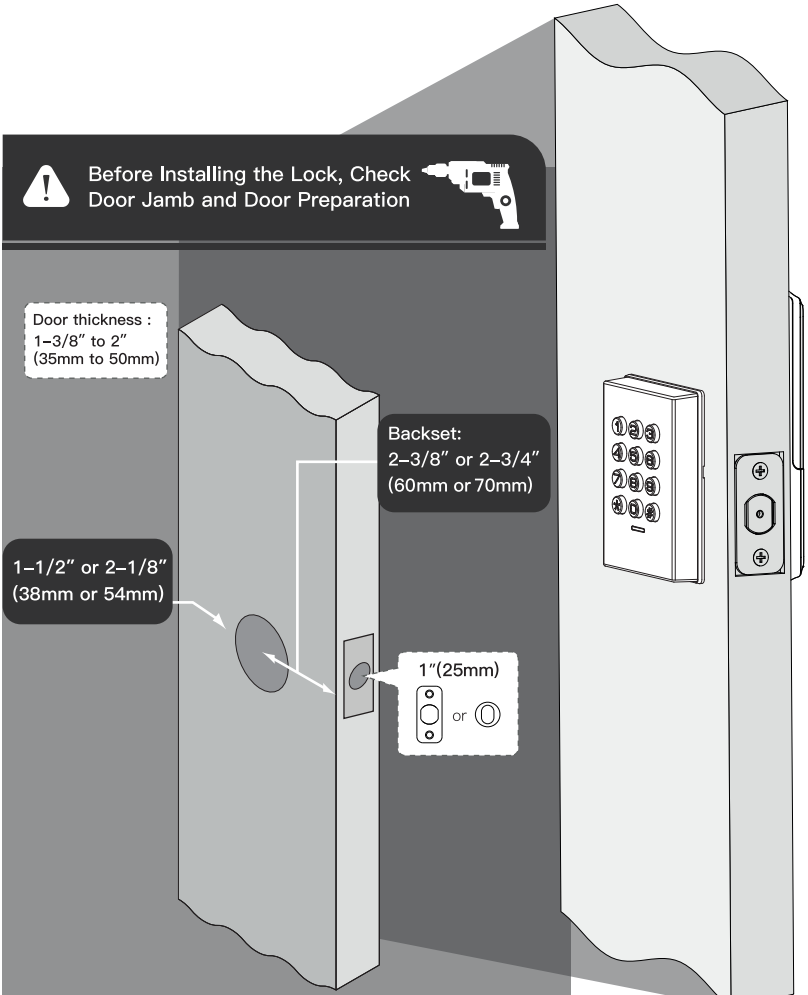
Before Installing the Lock, Check
Door Jamb and Door Preparation
Door thickness :
1-3/8" to 2"
(35mm to 50mm)
Backset:
2-3/8" or 2-3/4"
(60mm or 70mm)
1-1/2" or 2-1/8"
(38mm or 54mm)
1"(25mm)
or

Parts List:

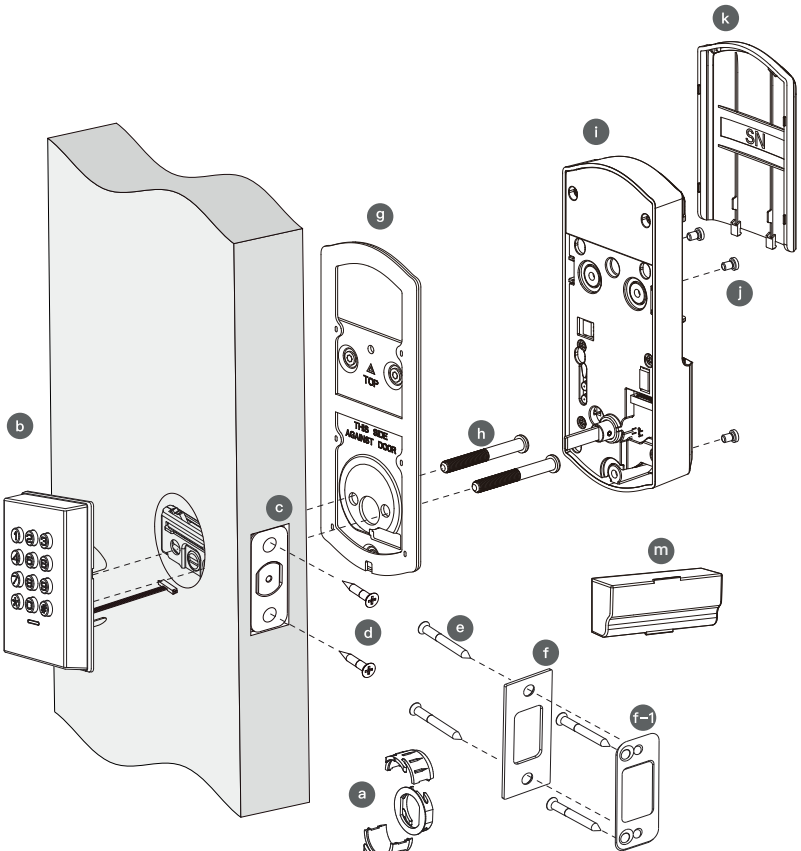

The details of part identification is shown on page 5.

Parts identification

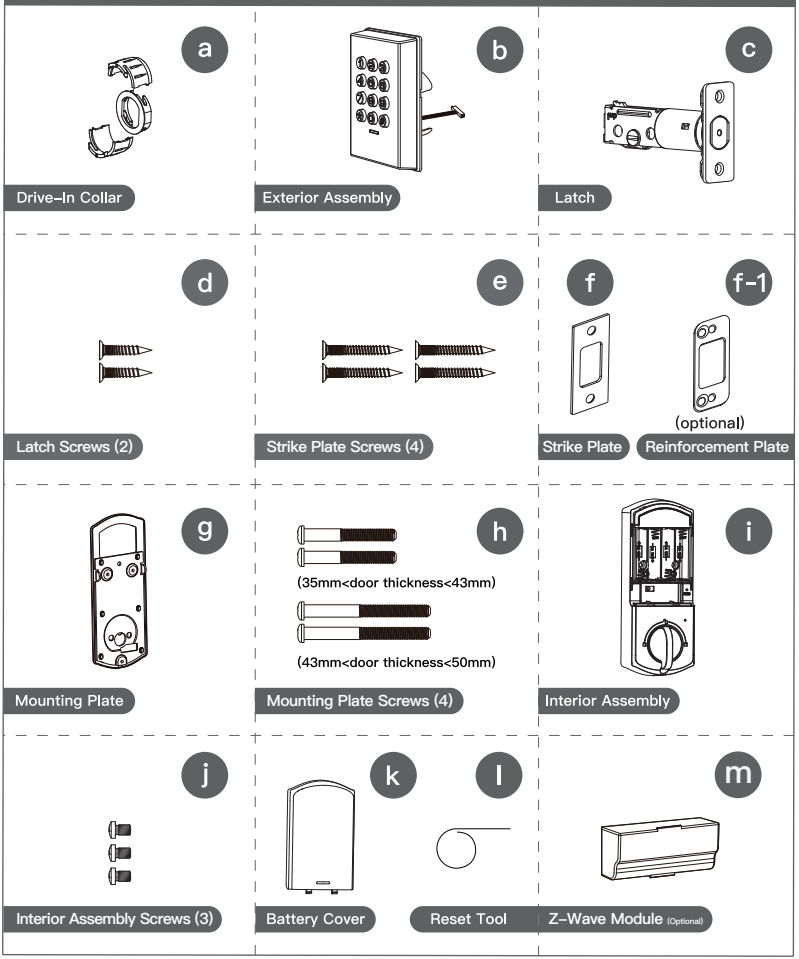

1. Prepare the door and check dimensions

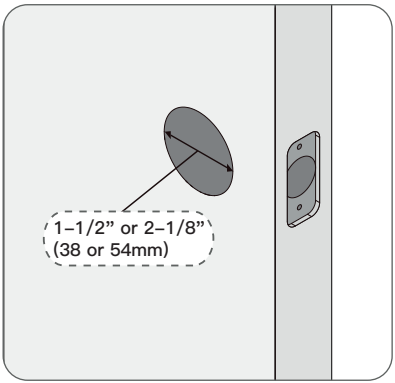

Measure to confirm that the bore hole is 1-1/2" or 2-1/8" (38mm or 54mm).

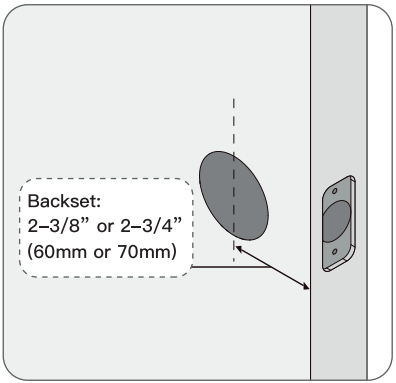

Measure to confirm that the backset is either 2-3/8″or 2-3/4″(60 or 70mm).

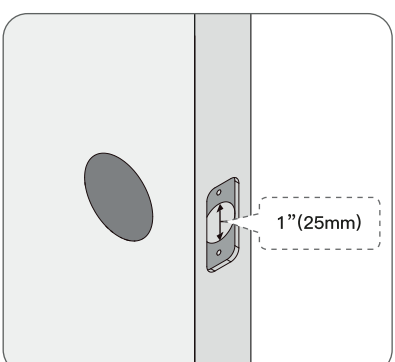

Measure to confirm that the hole in the door is 1″(25mm).

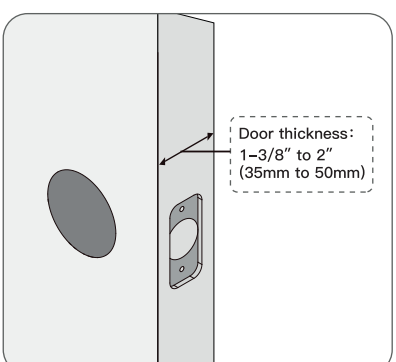

Measure to confirm that the door is 1-3/8" to 2" (35mm to 50mm) thick.

2. Adjust the latch

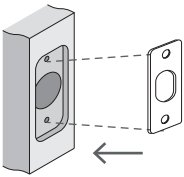

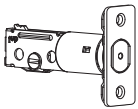

OR

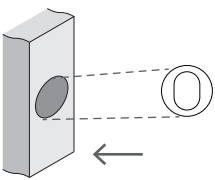

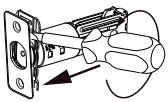

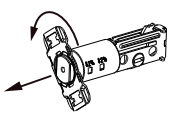

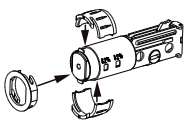

Is the slotted hole centered in the door hole?

Determine backset and adjust the latch.

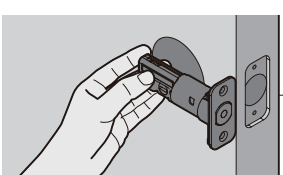

Hold the latch in front of the bore hole with the latch face flush against the door edge. Is the slotted hole centered in the door hole?

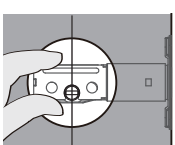

YES

No adjustment is required.
Proceed to next step.

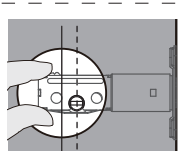

NO

Slotted hole is NOT centered.

Rotate and pull the latch as shown to extend latch.

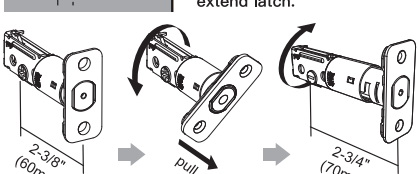

3. Install Latch

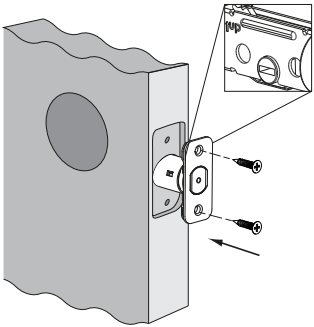

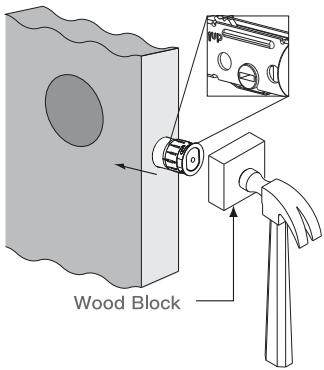

4. Install strike on the door frame.

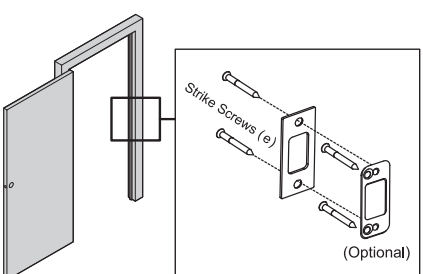

IMPORTANT:
Make sure the hole in the door frame is drilled a minimum of 1"(25mm) deep.

IMPORTANT: Keep the latch in unlocked position before installation.

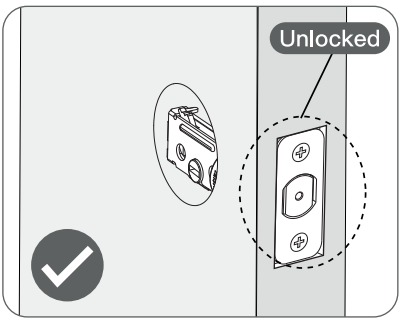

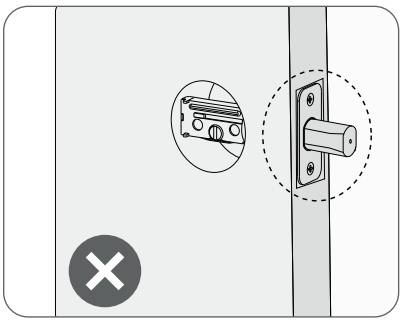

5. Install exterior assembly

Measure the diameter of the hole in the door.

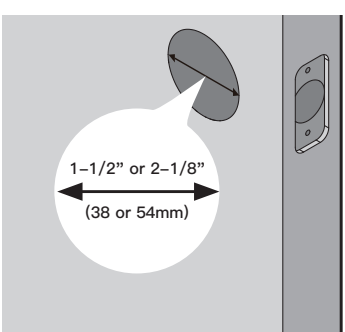

1–1/2” (38mm)

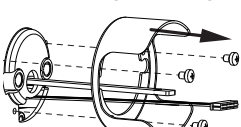

Remove the spacer

2–1/8” (54mm)

Proceed to next step

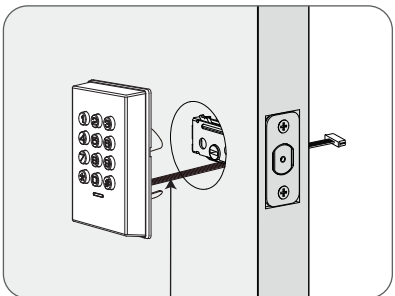

Route the cable below the latch.

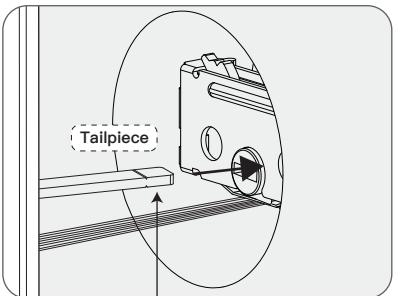

IMPORTANT: Latch must be in unlock position.
Note horizontal orientation of **tailpiece.**

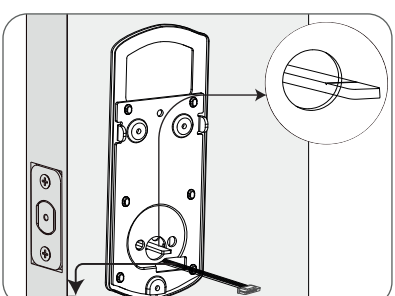

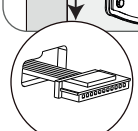

Route the cable through the hole in the mounting plate.

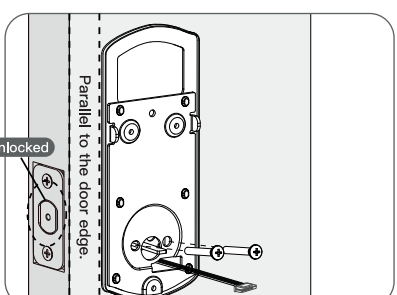

Secure the mounting plate with the mounting plate screws.

6. Install interior assembly

Do not load batteries until lock is completely installed.

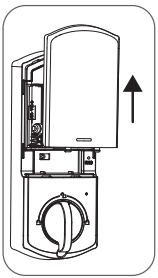

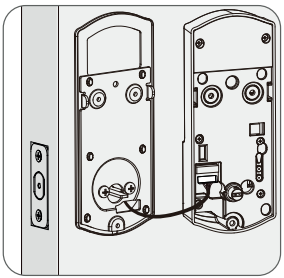

Remove the battery cover. Connect the cable from the exterior assembly to the socket on the interior assembly. Push the connector in firmly to ensure a proper connection.

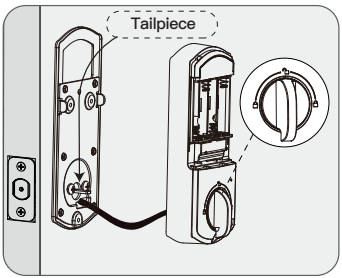

Rotate the thumb turn into the vertical position. Insert the tailpiece horizontally into the interior assembly.

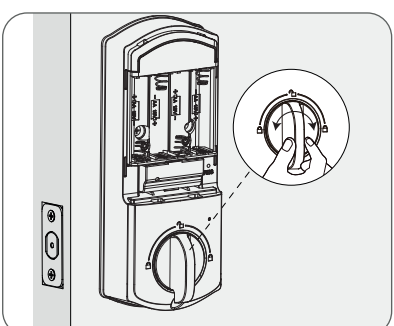

Test the lock by rotating the thumb turn to see if the bolt can be extended and retracted smoothly.

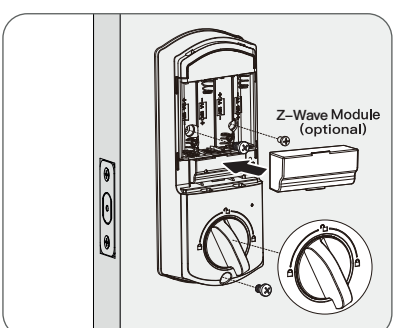

Secure the interior assembly with the interior assembly screws. Install the Z-Wave Module.
(Note: Batteries must not be installed prior to inserting and/or removing the Z-Wave Module.)

7. Door handing and reset

IMPORTANT: This step is required and crucial for the lock after installation!

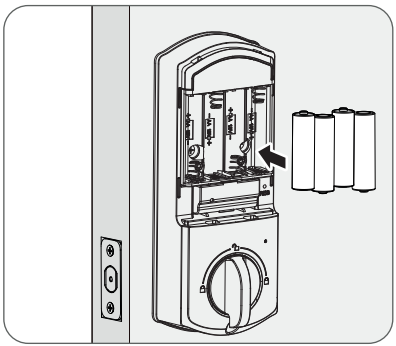

With the device unlocked, inset 4 AA alkaline batteries into the battery pack.

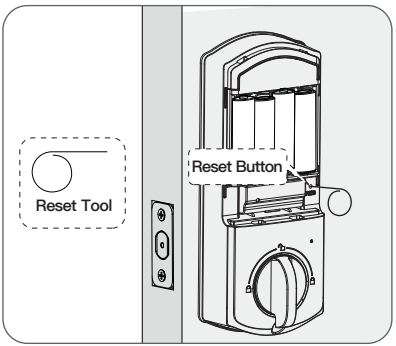

Use the Reset Tool to press and hold the Reset Button for more than 5 seconds until you hear a long “BEEP”.

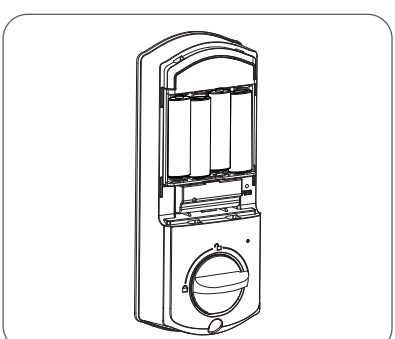

If the reset is successful, the latch bolt will extend on its own to learn the handing orientation of the door.

Kaadas

Z-Wave Key Free Keypad Deadbolt
KA250-Z

Programming Guide

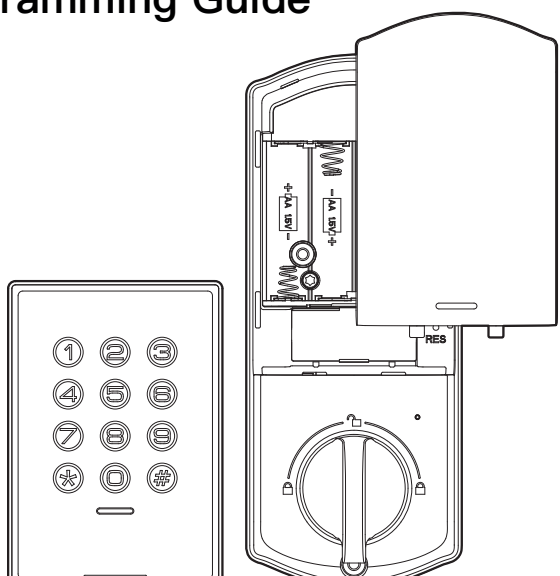

Kaadas reserves all rights for the final interpretation to this instruction

⚠ All design and specifications are subject to change without notice

Information and safety warnings

- Failure to follow the below instructions could result in damage to the product and void the factory warranty.
- The accuracy of the door preparation is critical for the proper functioning and security of this product. Misalignment can cause performance degradation and lessening of security.
- This lockset is designed to provide the highest standard of product quality and performance. Care should be taken to ensure a long-lasting finish. When cleaning is required, use a soft, damp cloth. Using lacquer thinner, caustic soaps, abrasive cleaners, or polishes could damage the coating and result in tarnishing.

(⚠ **NOTE**: Do not load the batteries until the lock is completely installed.)

1. Master PIN Code (4 to 10 digits): The default Master PIN Code is 12345678. It is required that you change the Master PIN Code to a code of your own before programming the lock.

2. User PIN Code (4 to 10 digits): A total of 250 User PIN Codes (including One-Time PIN Code) can be programmed and stored in the lock.

3. Both Master and User PIN Codes do not support the following combination of numbers:

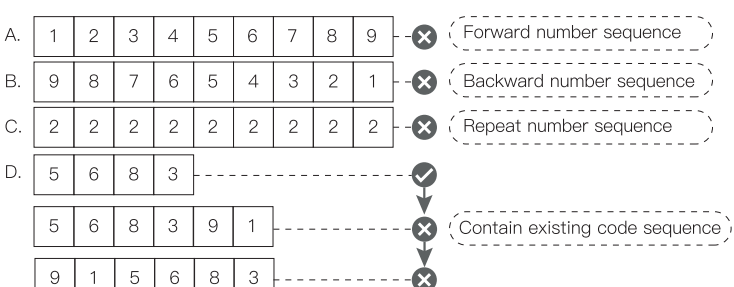

Parts illustrations

The default Master PIN Code is 12345678. It is required that you change the Master PIN Code to a code of your own before programming the lock.

ITEM	SPECIFICATIONS	REMARKS
Batteries	AA alkaline battery x4 (Operation voltage:4.6~6.0V) **NOTE:** only use new, non–rechargeable batteries.	Lasts up to seven months (10 times open/close per day)

Exterior Assembly

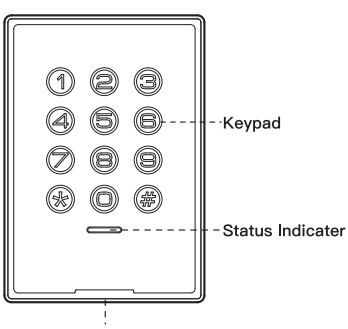

Interior Assembly

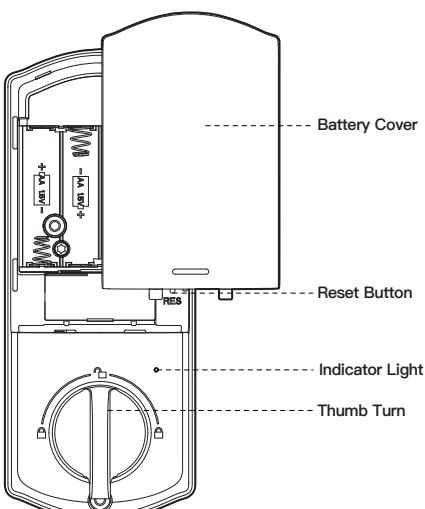

Definitions

Master PIN code:
Required for programming and feature settings, the Master PIN Code can be used to unlock the door while in vacation mode. The default Master PIN Code needs to be changed before programming the lock for security reasons.

Auto Lock:
If the Auto Lock is enabled, the lock will lock the door 30 seconds after it has been unlocked. This feature is off by default. You can set the time delay for 30s, 60s, 120s and 180s in Master Mode.

Wrong Entry PIN Code Limit:
After 10 attempts of entering an invalid User PIN Code, the unit will shut down for 3 minutes.

Silent Mode:
The keypad will beep when pushed but can be muted. Low battery and Wrong Entry PIN Code Limit alarms will still sound in Silent Mode.

Vacation Mode:
This is a safety feature for you when you leave your house for vacation or a long trip. When you activate Away Mode, all User PIN Codes will be locked until the Master PIN Code is entered on the keypad. When the lock is unlocked by the thumb turn or key, an alarm will sound for 1 minute. By entering the Master PIN Code on the keypad, you can disable the alarm and Vacation Mode.

One–Time PIN Code:
You can add the One–Time PIN Code in Master Mode in advance. When the need arises, you can send the One–Time PIN Code to visitors or friends. This code can only be used once and is automatically deleted when used.

How to use?

Unlock the door from outside

1
Master PIN Code
+
#

2
User PIN Code
+
#

Unlock the door from inside

Rotate the thumb turn to the unlock position.

Lock the door from outside

Auto Lock Mode
In Auto Lock Mode, the deadbolt will automatically lock 30 seconds after the deadbolt has been unlocked.

Manual Mode
Press any of the buttons on the keypad for 2 seconds.

Lock the door from inside

Auto Lock Mode
In Auto Lock Mode, the deadbolt will automatically lock 30 seconds after the deadbolt has been unlocked.

Manual Mode
Rotate the thumb turn to the lock position.

Z–Wave™ Module pairing instructions

(Z-Wave module required & installed)

Z-Wave™ pairing setting can only be programmed through Master Mode at the Lock.

1. Follow the user guide of your Smart Hub Gateway to enter Learning or Pairing Mode.
2. Touch the keypad with your hand to activate the lock.
3. Enter Master Mode.

4. Enter “0” to enter Network Settings.
5. Enter "1" to join the network or "2" to exit the network.
6. Follow the steps on your Z-Wave network gateway/controller to connect to the proper Z-Wave network.

⚠ CAUTION:

Z-Wave module is required to enable this feature. If the lock is connected to a smart hub gateway or controller, it is recommended that the programming of all PIN Codes is completed through the 3rd party user interface to ensure stable communication between the lock and controller is maintained.

Factory default settings

Settings	Factory Defaut
Master PIN Code	12345678
Auto Lock	Disabled
Silent Mode	Disabled
Wrong Code Entry Limit	10 times
Shutdown Time	3 Minutes
Vacation Mode	Disabled

Restore factory default settings

This procedure will delete all user codes associated with the lock.

Press and hold the Reset Button with the Reset Tool for 5 seconds until you hear the "BEEP".

Troubleshooting

- **The thumb turn cannot rotate.**

Remove and re–install the lock, making sure that the thumb turn is in the vertical position.

- **The lock cannot be locked or unlocked by the keypad.**

Make sure that the User PIN Codes are not disabled. If needed, restore the lock's default settings and reprogram the unit.

- **The keypad is not responding to touch.**

Make sure the cables are properly connected and the batteries are installed correctly. If the keypad is still not responding, replace the batteries with brand new AA alkaline batteries.

- **Forgot your Master PIN Code.**

Perform a factory reset in order to erase all PIN Codes. Once the reset is complete, all PIN Codes will be erased and the Master PIN Code will return to the default (12345678). For security reasons, change the Master PIN Code immediately.

- **I forgot to change my batteries, and now my keypad isn't working.**

The lock will give you plenty of alerts to remind you to change the batteries. If they die before you can change them, connect a power source to the USB–C Power Port at the bottom of the keypad. This will power the lock for you to enter your PIN code and unlock your door. Remember to change your batteries once you have used this method.

FCC Statement

This equipment has been tested and found to comply with the limits for a Class B digital device, pursuant to part 15 of the FCC Rules. These limits are designed to provide reasonable protection against harmful interference in a residential installation. This equipment generates, uses and can radiate radio frequency energy and, if not installed and used in accordance with the instructions, may cause harmful interference to radio communications. However, there is no guarantee that interference will not occur in a particular installation. If this equipment does cause harmful interference to radio or television reception, which can be determined by turning the equipment off and on, the user is encouraged to try to correct the interference by one or more of the following measures:

• Reorient or relocate the receiving antenna.

• Increase the separation between the equipment and receiver.

• Connect the equipment into an outlet on a circuit different from that to which the receiver is connected.

•Consult the dealer or an experienced radio/TV technician for help.

Caution: Any changes or modifications to this device not explicitly approved by manufacturer could void your authority to operate this equipment.

This device complies with part 15 of the FCC Rules. Operation is subject to the following two conditions: (1) This device may not cause harmful interference, and (2) this device must accept any interference received, including interference that may cause undesired operation.

RF Exposure Information

This equipment complies with FCC radiation exposure limits set forth for an uncontrolled environment. This equipment should be installed and operated with minimum distance 20cm between the radiator and your body.

ISED Statement

English: This device contains licence-exempt transmitter(s)/receiver(s) that comply with Innovation, Science and Economic Development Canada's licence-exempt RSS(s). Operation is subject to the following two conditions:

(1) This device may not cause interference.

(2) This device must accept any interference, including interference that may cause undesired operation of the device.

The digital apparatus complies with Canadian CAN ICES-3 (B)/NMB-3(B).

French: Cet appareil contient des émetteurs/récepteurs exempts de licence qui sont conformes aux RSS exemptés de licence d'Innovation, Sciences et Développement économique Canada.

L'exploitation est soumise aux deux conditions suivantes :

(1) Cet appareil ne doit pas provoquer d'interférences.

(2) Cet appareil doit accepter toute interférence, y compris les interférences susceptibles de provoquer un fonctionnement indésirable de l'appareil.

l'appareil numérique du ciem conforme canadien peut – 3 (b) / nmb – 3 (b).

This device meets the exemption from the routine evaluation limits in section 2.5 of RSS 102 and compliance with RSS 102 RF exposure, users can obtain Canadian information on RF exposure and compliance.

cet appareil est conforme à l'exemption des limites d'évaluation courante dans la section 2.5 du cnr – 102 et conformité avec rss 102 de l'exposition aux rf, les utilisateurs peuvent obtenir des données canadiennes sur l'exposition aux champs rf et la conformité.

This equipment complies with Canada radiation exposure limits set forth for an uncontrolled environment.

Cet équipement est conforme aux limites d'exposition aux rayonnements du Canada établies pour un environnement non contrôlé.

This equipment should be installed and operated with minimum distance 20cm between the radiator & your body.

Cet équipement doit être installé et utilisé à une distance minimale de 20 cm entre le radiateur et votre corps.

Quick Set Up

The default Master Code is 12345678 . It is required that you change it to a code of your own before programming.

If the indicator light flashes red, your setting failed and you will need to redo the operation.

Change Master PIN Code	→	* * + Master PIN Code + #	→	Press 1	Wait for green light to flash	→	New Master PIN Code + #	Wait for green light to flash	→	New Master PIN Code + #	Green light flashes twice
Add User PIN Code	→	* * + Master PIN Code + #	→	Press 2	Wait for green light to flash	→	New Master PIN Code + #	Wait for green light to flash	→	New Master PIN Code + #	Green light flashes twice
Add User PIN Code	→	* * + Master PIN Code + #	→	Press 3	Wait for green light to flash	→	Unwanted User PIN Code + #	Wait for green light to flash	→	Unwanted User PIN Code + #	Green light flashes twice
Silent Mode	→	* * + Master PIN Code + #	→	Press 6	Wait for green light to flash	→	Press 1 + # → Silent Mode disabled when green light flashes Press 2 + # → Silent Mode enabled when green light flashes				
Auto Lock	→	* * + Master PIN Code + #	→	Press 7	Wait for green light to flash	→	Press 1 + # → Auto Lock disabled when green light flashes Press 2 + # → Auto Lock 30s enabled when green light flashes Press 3 + # → Auto Lock 60s enabled when green light flashes Press 4 + # → Auto Lock 120s enabled when green light flashes Press 5 + # → Auto Lock 180s enabled when green light flashes				
Vacation Mode	→	* * + Master PIN Code + #	→	Press 8	Wait for green light to flash	→	Press #	Vacation Mode enabled when green light flashes			
Add One-Time PIN Code	→	* * + Master PIN Code + #	→	Press 9	Wait for green light to flash	→	New One-Time PIN Code + #	Wait for green light to flash	→	New One-Time PIN Code + #	Green light flashes twice
Network Setting	→	* * + Master PIN Code + #	→	Press 0	Wait for green light to flash	→	Press 1 + # → Networked joined when green light flashes Press 2 + # → Networked exited when green light flashes				

V1.0