HEATIT Z-TRM6

Installers manual

TO PRODUCT DOCUMENTS

Firmware version	Document version
FW 1.0	2023-A
Article no.	Document date
54 305 66 54 305 68	01.07.2023

Org. doc. date 01.07.2023

POWER METERING
SMART START
S2 SECURITY
OTA UPDATE
Z-WAVE PLUS

White RAL 9003
54 305 66

Black matt
54 305 68

TABLE OF CONTENTS

1. Introduction
2. Statement regarding products from multiple manufacturers
3. Behavior within the Z-Wave network
4. Quick Start
5. Installation
6. Connections
7. Add/Remove
8. Factory reset
9. Startup
10. Principles of regulation
11. Local settings menu
12. Display Menu structure
13. Temperature shown in display
14. Standby and main screen
15. KWh value in menu
16. Size of load
17. Choice of sensor
18. Selecting sensor value
19. Calibration
20. Brightness
21. Display on/off
22. Display icons
23. Child lock
24. Open window detection
25. Error codes
26. Safety features
27. QR-Code placement (DSK)
28. Security
29. Node Information Frame
30. Associations
31. Association Groups
32. Configuration Parameters
33. Command Classes
34. Supported Command Classes
35. Controlled Command Classes
36. Thermostat dimensions
37. Menu structure display Product info

1. INTRODUCTION

Heatit Z-TRM6 is an electronic thermostat designed for electrical heating. The thermostat can be controlled through your Z-Wave™ network or via the buttons on the front. The thermostat has a user friendly interface.

Heatit Z-TRM6 has 3 modes; Heat - Cool and Eco.

The thermostat fits in standard European junction boxes and may be used with most System 55 frames. It has a sturdy metal frame for secure fastening on the junction box. The thermostat has one built-in room temperature sensor. Two additional external temperature sensors may also be connected.

Heatit Z-TRM6 has active power metering and it gives you real time information about your power consumption. It also allows you to set the power metering value manually in case of connection with a contactor.

The thermostat can be set up with multiple associations and can be used as a master thermostat. It can also control external relays and wall plugs.

The thermostat can withstand a load of max 16A/3600W at 230VAC. We recommend a contactor for loads above 13A.

2. STATEMENT REGARDING PRODUCTS FROM MULTIPLE MANUFACTURERS

Please read this before installation

This device may be used with all devices certified with the Z-Wave Plus™ certificate and should be compatible with such devices produced by any manufacturer. Every primary controller is different depending on the manufacturer, their target audience and intended use/application. Please review the functionalities implemented by the primary controller you intend to use with our Z-Wave Plus certified device to ensure that it provides the necessary controls to take full advantage of our product's capabilities.

3. BEHAVIOR WITHIN THE Z-WAVE NETWORK

This device may be operated within any Z-Wave™ network with Z-Wave-certified devices from other manufacturers. All non-battery-operated nodes within the network will act as repeaters regardless of manufacturer to increase the reliability of the network. On delivery, the device does not belong to any Z-Wave network. The device needs to be added to an existing network to communicate with the other devices within it. Devices may also be removed from a network. The add/remove processes are initiated by the primary controller of the Z-Wave network.

4. QUICK START

1. Switch off the mains voltage (disable the fuse).
2. Open the junction box.
3. Connect the wires according to the description in Chapter 6; "Connections". Optional: Connect external wired sensors.
4. After verifying the connections, switch on the mains voltage.
5. Set the primary controller in add mode (security/non-security).

6. Hold the Center button until "OFF" is shown in the display (approx. 5 seconds).
7. Press the "+" button once to reach "CON", and hold until the display shows a rotating light pattern.
8. The thermostat will display "INCL" when the thermostat is successfully added. NB! If adding/removing fails, Err (error) will appear.

5. INSTALLATION

Installation must be done by a qualified electrician in accordance with national building codes. Before installation, disconnect the power to the device from the mains. During installation of the device, power to the device must be disconnected AT ALL TIMES!

The product allows for wiring of cables with a cross section of up to 1x2.5mm².

6. CONNECTIONS

Max tightening torque for terminal screws: 2Nm.

To access the terminal screws, hold the sides of the display and gently pull outwards to detach the front piece.

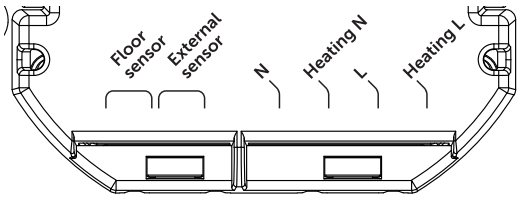

Floor sensor	NTC type 6.8, 10, 12, 15, 22, 33, 47 or 100kΩ. Default 10kΩ.
External sensor	NTC type 6.8, 10, 12, 15, 22, 33, 47 or 100kΩ. Default 10kΩ.
N	Power connection (Neutral) 230VAC.
Heating N	Heating cable N connection.
L	Power connection (Live) 230VAC.
Heating L	Heating cable L connection.

Next, position the thermostat and mount it into the junction box using 2 screws. Position the thermostat front over the part mounted in the junction box, then carefully press the front until it clicks into place. In order to get power metering values, the load needs to be connected to both heating L + N.

7. ADD/REMOVE

Please read this before installation

The primary controller/gateway has a mode for adding or removing devices. Please refer to your primary controller manual on how to set the primary controller in add/remove mode. The device may only be added or removed from the network if the primary controller is in add/remove mode. When the device is removed from the network, it will NOT revert to factory settings.

An always listening node must be powered continuously and reside in a fixed position in the installation to secure the routing table. Adding the device within a 2 meter range from the gateway can minimize faults during the Interview process.

There are two ways to add the device to a Z-Wave network.

7.1 Method 1: Standard (Manual)

Add/remove mode is indicated on the device by rotating LED segments on the display. It indicates this for 90 seconds until a timeout occurs, or until the device has been added to/removed from the network. Configuration mode can also be cancelled by performing the same procedure used for starting Configuration mode.

1. Hold the Center button for 5 seconds. The display will show "OFF".
2. Press the "+" button once to see "CON" in the display.
3. Start the add/remove device process in your primary controller.
4. Start the configuration mode on the thermostat by holding the Center button for approximately 2 seconds.

The device is now ready for use with default settings.

NB! When the device is removed from the gateway, the parameters are not reset. To reset the parameters, see Chapter "Factory reset".

If inclusion fails, please perform a "remove device" process and try again. If inclusion fails again, please see "Factory reset".

7.2 Method 2: SmartStart (Automatic)

SmartStart enabled products may be added to a Z-Wave network by scanning the Z-Wave QR-Code on the product if your primary controller supports SmartStart inclusion. No further action is required and the SmartStart product will be added automatically after being powered on within range of the primary controller.

8. FACTORY RESET

Enter the menu by holding the Center button for about 5 seconds, navigate in the menu with the "+" button til you see FACT. Press the Center button until you see "-- --" blinking in the display, then hold for about 5 seconds to perform a reset. You may also initiate a reset by holding the Right and Center buttons for 60 seconds.

When either of these procedures has been performed, the thermostat will perform a complete factory reset. The device will display "RES" for 5 seconds while performing a factory reset. When "RES" is no longer displayed, the thermostat has been reset.

Please use this procedure only when the network primary controller is missing or otherwise inoperable.

9. STARTUP

After powering up the device for the first time, all parameters will have default settings and the thermostat will start by asking which sensor mode should be used.

10. PRINCIPLES OF REGULATION

The thermostat uses temperature readings retrieved from the internal sensor and/or from external wired sensors to regulate the temperature. The thermostat will regulate the temperature using hysteresis or PWM, based on the setpoint temperature. To select either "HYST" or "PWM" you can find the "REG" menu option or use Parameter 13 "Regulation mode ("OPER")".

10.1 Hysteresis

Hysteresis will turn on and off the load based on the hysteresis value in comparison to the setpoint. You can make changes to the thermostat hysteresis. You may choose hysteresis values between 0.3°C and 3.0°C using Parameter 14. The default setting is 0.5°C. When using waterbased heating we recommend a hysteresis of 1.0°C.

You may also change the hysteresis by entering the local settings menu and holding the Center button for 2 seconds when "REG" is displayed. Here you can choose values between 0.3 and 3.0.

10.2 Pulse-width modulation PWM

With PWM regulation enabled, the thermostat will regulate based on duty cycles. The thermostat is turned on and off in percentage intervals of the cycle. The amount of time the relay will be on is based on how far the measured temperature is from the setpoint.

11. LOCAL SETTINGS MENU

To enter the settings menu, hold the Center button for 5 seconds. The display will display "OFF". You are now in the settings menu. While in the settings menu, "SET" will be displayed in the bottom right of the display. You can now scroll up and down using the Left and Right buttons. Some options have submenus. To navigate the submenus, press the Center button once to enter or exit the submenu. Press the Left and Right buttons to find your desired value and hold the Center button for 2 seconds to confirm your selection. "STOR" will appear to indicate settings are stored.

12. DISPLAY MENU STRUCTURE

See flowchart at the end of this manual.

13. TEMPERATURE SHOWN IN DISPLAY

By default, the temperature shown on the display while in standby state is the setpoint. This may be altered with Parameter 15:"Temperature display". It may also be changed by entering the local settings menu and holding the Center button for 2 seconds when "MODE" is displayed. You can choose between "SETT" and "RELT". "SETT" is the Setpoint temperature and "RELT" is the real-time temperature.

14. STANDBY AND MAIN SCREEN

When the thermostat remains untouched for a while, it will automatically go to the standby screen. The standby will by default show the setpoint temperature.

By pressing any button once, you will see the measured temperature. By pressing the Left or Right button multiple times, you will change the setpoint.

15. KWH VALUE IN MENU

The device supports power metering to give insight into the power consumption of the heating. The total consumption of the device can be seen in the system from the "kWh" menu option. The total consumption data can be reset by holding the Center button while in the kWh menu.

16. SIZE OF LOAD

In the "load" menu or from Parameter 29 (size of load), the load value can be set manually if the load is not directly connected to the thermostat. The size of load can be adjusted in 100W increments up to 9900W.

17. CHOICE OF SENSOR

The thermostat has multiple sensors and sensor modes. This lets you configure the thermostat to work correctly in most installations. The sensors and modes may be selected from either the local settings menu or via Parameter 2; "Sensor mode ("OPER")".

Available sensor modes:

F	Floor sensor
A	Internal room sensor
AF	Internal room sensor + Floor sensor
A2	External room sensor
A2F	External room sensor + Floor sensor
PWER	Power regulator mode (no sensor used)

NOTE: Some types of floor require that a floor sensor is connected in order to limit the floor temperature to a maximum of 27°C (check the manual from the floor manufacturer). When the thermostat is used in (AF or A2F) the floor limiter FHI is automatically set to 27°C. When using any other sensor type (A, F or A2) the minimum and maximum limits are 5°C and 40°C respectively.

18. SELECTING SENSOR VALUE

The thermostat allows the selection of multiple different resistance values of an NTC sensor and can be selected using either the local settings menu or via Parameter 3: "Sensor value "SEN". The supported sensor values are as follows:
6.8, 10, 12, 15, 22, 33, 47 or 100KΩ.
The factory default value is 10kΩ. When connecting both the floor sensor and the external sensor, make sure to use sensors with the same Ohm value.

19. CALIBRATION

If the temperature sensor readout is not correct, you can make minor changes to the temperature readout. The temperature readings can be calibrated by ±6°C using Parameter 10, 11 and 12. The calibration can also be performed from the menu using CAR, CAE and CAF. The adjusted value will be displayed in the controller/gateway indicating what the thermostat uses for regulation.

SENSOR TYPE	IN MENU STRUCTURE	PARAMETER
Internal sensor	CAR	10
External sensor	CAE	11
Floor sensor	CAF	12

20. BRIGHTNESS

Using the menu choices "BR1" and "BR2", the brightness of the display in Active and Standby state can be changed respectively. "BR1" and "BR2" are also included in the device as Parameter 16 (BR1) and Parameter 17 (BR2).

21. DISPLAY ON/OFF (DON/DOFF)

The thermostat has a display ON/OFF function which decides whether the display should turn completely off when in Standby. To enable/disable this function, hold the Left and Center buttons for 10 seconds. The display will show "DOFF" when the function is activated and "DON" when the function is disabled. When operating any button, the display will light up.

22. DISPLAY ICONS

ICON	DESCRIPTION
	This icon will be displayed while the relay is on and the thermostat is in either Heating or Eco mode.
	This icon will be displayed while the relay is on and the thermostat is in Cooling mode.
	This icon shows the current signal strength.

23. CHILD LOCK

Child lock is a function for disabling the buttons from the display locally. It will show "LOCK" when attempting to operate it while the function is enabled. To enable or disable the function, hold the Left and Right buttons for 10 seconds. Enabling the function will show "LOCK" in the display, disabling the function will show "OPEN".

24. OPEN WINDOW DETECTION OWD

Open Window Detection (OWD) is a function which will reduce the thermostat setpoint on detection of an open window. This happens when the temperature sensor registers a rapid temperature drop.

When OWD is active, the setpoint is reduced to 5°C in order not to waste energy. OWD will automatically be cancelled if OWD has been active for more than 1 hour, or if the temperature increases by 3°C. OWD can also be cancelled manually by increasing/decreasing the setpoint with the Left and Right buttons.

By default, OWD is not enabled. The feature may be enabled by selecting "OWD" from the menu. Choose between options "OFF" and "ON".

25. ERROR CODES

Err Adding fail. See Chapter 7 "Add/remove".
Err1 Internal error. Most probably a faulty unit. Replace unit.
Err2 Z-Wave error. Most probably a faulty unit. Replace unit.
Err3 Internal error. Most probably a faulty unit. Replace unit.
Err4 Floor sensor error. You have chosen F, AF or A2F sensor mode without having a floor sensor connected, or the sensor may be damaged.
Err5 External sensor error. You have chosen A2 or A2F sensor mode without having an external sensor connected, or the sensor may be damaged.
Err6 Overheating. Contact your electrician.
Err7 Overload. Contact your electrician.

26. SAFETY FEATURES

The device has safety features to ensure safe operation and warn the user of any faults/unexpected behavior. The device has an Overheat and Overload function. If the thermostat registers an Overheat or Overload incident, the thermostat will switch off and an error will appear in the display.

26.1 Overheating

The device features internal temperature sensors that detect overheating. It warns the user and turns off the relay to prevent any damage.
When overheating is detected, the device will:

- Turn off the relay.
- Display Err6 in the display.
- Send a notification to the gateway.

26.2 Overload

The device features a 16A overload protection. The overload is triggered if there is a current draw of more than 16A.
When overload is detected, the device will:

- Turn off the relay.
- Display Err7 in the display.
- Send a notification to the gateway.

26.3 Sensor failure

The device has the ability to detect when there is no sensor connected or the sensor is broken or otherwise defective, causing an open circuit.
When the device detects the sensor error, the device will:

- Turn off the relay.
- Display an error in the display, changes based on which sensor is not connected/faulty.

To clear the "Sensor not connected" error the device has to be disconnected from the mains, and the wiring and sensor(s) need to be checked. When the fault is resolved the mains can be reconnected and the device will function normally again.

27. QR-CODE PLACEMENT (DSK)

The QR-Code is needed when including a device using S2 security or SmartStart. The DSK can be found in the QR-Code and is located;

- On the product.
- In the Quick Guide.
- On the packaging box/gift box.

28. SECURITY

S2 security enhances Z-Wave Plus with an additional layer of AES 128-bit encryption of the wireless Z-Wave communication to prevent hacking and man-in-middle attacks on the home network.

This device supports S2 and has a Z-Wave DSK QR-Code label that may be used when the device is added to the Z-Wave home network. The primary controller will ask for a 5-digit code. They are the first underlined 5 digits located on the QR code sticker. The primary controller will then ask you to confirm the rest of the code that is contained in the QR-Code.

29. NODE INFORMATION FRAME

The node information frame is the "business card" of a Z-Wave device. It contains information about the device type and its technical features. The add and remove procedure of the device is confirmed by sending out a node information frame. Besides this, it may be necessary for certain network operations to send out a node information frame.

30. ASSOCIATIONS

Z-Wave devices interact with other Z-Wave devices. The relationship between one device controlling another device is called an association. In order to control a subordinate device, the controlling device needs to maintain a list of devices that will receive controlling commands. These lists are called "Association Groups". They are always related to the specific event triggered (e.g., sensor reports). In case the event is triggered, all devices stored in the respective association group will receive a joint wireless command.

30.1 Setting and Removing Associations

Associations may be assigned and removed via Z-Wave commands. Please refer to your primary controller/Z-Wave gateway for more information.

30.2 Multi Channel support

Heatit Z-TRM6 has support for the Multi Channel Command Class. This allows the thermostat to be perceived as multiple devices by the primary controller, which enables the reporting of multiple temperature sensors and the ability to distinguish between the reports coming from the device.

30.3 No Multi Channel support

If the primary controller or the Z-Wave devices to be associated with Heatit Z-TRM6 do not support the Multi Channel Association Command Class (Multi Channel encapsulation), only the association groups in the root device are accessible. This device contains 3 association groups in addition to the Lifeline Group.

31. ASSOCIATION GROUPS

Without Multi Channel support:

MULTI LEVEL SWITCH DEVICE	DESCRIPTION
Group 1	Lifeline. Lifeline Group to be used by primary controller, sends: -Thermostat Mode Report -Thermostat Setpoint Report -Thermostat Operating State Report -Protection Report -Notification Report -Meter Report -Sensor Multilevel Report -Device Reset Locally Notification -Indicator Report -Configuration Report Max nodes in group: 1
Group 2	Binary Switch Set. Send Binary Switch set commands based on the internal relay state, sends: -Binary Switch Set Max nodes in group: 10
Group 3	Thermostat Setpoint set. Sends Thermostat Setpoint set commands based on own setpoint to allow for use as master thermostat, sends: -Thermostat Setpoint Set Max nodes in group: 10
Group 4	Thermostat Mode set. Sends Thermostat Mode set commands based on own mode to allow for use as master thermostat, sends: -Thermostat Mode Set Max nodes in group: 10

With Multi Channel support:

1: THERMOSTAT DEVICE	THE MAIN THERMOSTAT DEVICE
Group 1	Lifeline. Lifeline Group to be used by primary controller, sends: -Thermostat Mode Report -Thermostat Setpoint Report -Thermostat Operating State Report -Protection Report -Notification Report -Meter Report -Sensor Multilevel Report -Device Reset Locally Notification -Indicator Report -Configuration Report Max nodes in group: 1
Group 2	Binary Switch Set Send Binary Switch set commands based on the internal relay state, sends: -Binary Switch Set Max. nodes in group: 10
Group 3	Thermostat Setpoint Set Sends Thermostat Setpoint set commands based on own setpoint to allow for use as master thermostat, sends: -Thermostat Setpoint Set Max. nodes in group: 10
Group 4	Thermostat Mode Set. Sends Thermostat Mode set commands based on own mode to allow for use as master thermostat, sends: -Thermostat Mode Set Max. nodes in group: 10
2: MULTILEVEL SENSOR DEVICE	**INTERNAL SENSOR**
Group 1	Lifeline. Lifeline Group for internal sensor, sends: -Sensor Multilevel Report Max. nodes in group: 0
3: MULTILEVEL SENSOR DEVICE	**EXTERNAL SENSOR**
Group 1	Lifeline. Lifeline Group for external sensor, sends: -Sensor Multilevel Report Max. nodes in group: 0
4: MULTILEVEL SENSOR DEVICE	**FLOOR SENSOR**
Group 1	Lifeline. Lifeline Group for floor sensor, sends: -Sensor Multilevel Report Max. nodes in group: 0

32. CONFIGURATION PARAMETERS

Z-Wave products are supposed to work out of the box after inclusion. Some device configuration may, however, alter the functionality to better serve user needs or unlock further enhanced features. All the parameters below do not feature altering capabilities, advanced or read only flags.

PARA NO#	PARA SIZE (BYTE)	NAME	SHORT DESCRIPTION / COMMENT	MIN	MAX	DEFAULT	DESCRIPTION OF VALUE
1	1	Disable buttons	Disable buttons, must be enabled through the parameter, or turned back on locally by holding the center and right button for 30 seconds until the display shows "UNLK".	0		0	Enabled, buttons on the front of the device work. (Default)
					1		Disabled, buttons on the front of the device are disabled.
2	1	Sensor mode (OPER)	Choose which sensors the thermostat should use for regulation.	0		1	F, Floor sensor
				1			A, Internal sensor (Default)
				2			AF, Internal sensor with floor sensor limitations
				3			A2, External sensor
				4			A2F, External sensor with floor sensor limitations
				5			PWER, Power regulator mode
3	1	Sensor value (SEN)	Select the resistance value of the connected NTC.	0		0	10KΩ (Default)
				1			12KΩ
				2			15KΩ
				3			22KΩ
				4			33KΩ
				5			47KΩ
				6			6.8KΩ
				7			100KΩ
4	2	Internal sensor min temp limit	Decides the lowest temperature allowed by the thermostat when using sensor mode A.	50	400	50	5°C to 40°C (Default is 5°C)

PARA NO#	PARA SIZE (BYTE)	NAME	SHORT DESCRIPTION / COMMENT	MIN	MAX	DEFAULT	DESCRIPTION OF VALUE
5	2	Floor sensor min temp limit	Devices the lowest temperature allowed by the thermostat when using sensor mode AF, F, A2F.	50	400	50	5°C to 40°C (Default is 5°C)
6	2	External sensor min temp limit	Decides the lowest temperature allowed by the thermostat when using sensor mode A2, A2F.	50	400	50	5°C to 40°C (Default is 5°C)
7	2	Internal sensor max temp limit	Decide the highest temperature allowed by the thermostat when using sensor mode A.	50	400	400	5°C to 40°C (Default is 40°C)
8	2	Floor sensor max temp limit	Decide the highest temperature allowed by the thermostat when using sensor mode AF, F, A2F.	50	400	400	5°C to 40°C (Default is 40°C)
9	2	External sensor max temp limit	Decide the highest temperature allowed by the thermostat when using sensor mode A2, A2F.	50	400	400	5°C to 40°C (Default is 40°C)
10	1	Internal sensor calibration (CAR)	Manually calibrate sensor A ±6°C.	-60	60	0	-6.0°C to 6.0°C Calibrates the sensor by ±6°C. (Default is 0°C) NB! To set a negative value, use 256 and subtract the desired value.
11	1	Floor sensor calibration (CAF)	Manually calibrate sensor F ±6°C.	-60	60	0	-6.0°C to 6.0°C Calibrates the sensor by ±6°C. (Default is 0°C) NB! To set a negative value, use 256 and subtract the desired value.
12	1	External sensor calibration (CAE)	Manually calibrate sensor A2 ±6°C.	-60	60	0	-6.0°C to 6.0°C. Calibrates the sensor by ±6°C. (Default is 0°C) NB! To set a negative value, use 256 and subtract the desired value.
13	1	Regulation mode (REG)	Choose between regulation modes PWM and Hysteresis.	0		0	Hysteresis
					1		PWM regulation
14	1	Temperature control hysteresis (HYST)	Choose the hysteresis used when regulation mode is set to HYST.	3	30	5	0.3°C to 3.0°C. Default is 5 (0.5°C)
15	1	Temperature display	Select what is shown on the display during Standby state.	0		0	Display setpoint temperature. (Default)
					1		Display measured temperature.
16	1	Active display brightness (BR1)	Configure the brightness of the display during active state.	1	10	10	10 to 100% (Default 100%)
17	1	Standby display brightness (BR2)	Configure the brightness of the display during standby state.	1	10	5	10 to 100% (Default 50%)
18	2	Temperature report interval	Set the time interval between consecutive temperature reports.	30	65535	840	30 to 65535 seconds. 840s (14 min) (Default)
19	1	Temperature report hysteresis	Set the change in temperature required to send a temperature report based on change.	1	100	10	0.1°C to 10°C 10 (1°C) (Default)
20	2	Meter report interval	Set the time interval between consecutive meter reports.	30	65535	840	30 to 65535 seconds. 840s (14 min) (Default)
21	2	Action after error	Decide how the device should react when the overload / overheating features has turned OFF relay.	0		0	0, device will turn off and show an error in the display. (Default)
				10	65535		10 to 65535 seconds, device will attempt to turn on again after an error based on the delay specified.
22	2	Heating setpoint	Set setpoint for Heating mode.	50	400	210	5°C to 40°C. 21°C (Default)
23	2	Cooling setpoint	Set setpoint for Cooling mode.	50	400	180	5°C to 40°C. 18°C (Default)
24	2	ECO setpoint	Set setpoint for ECO mode.	50	400	180	5°C to 40°C. 18°C (Default)
25	1	Power regulator active time	Set the % of time the relay should be active when using PWER mode. (30-minute duty cycle).	1	10	2	1 - 10 10 to 100%. 20% (Default)
26	2	Thermostat state update interval	Set the time interval of how often the device updates Thermostat Setpoint set, Thermostat Mode set and Binary set to associated devices.	0		43200	Sends only when changed.
				30	65535		30 to 65535 seconds. 43200 seconds + when changed. (Default)

PARA NO#	PARA SIZE (BYTE)	NAME	SHORT DESCRIPTION / COMMENT	MIN	MAX	DEFAULT	DESCRIPTION OF VALUE
27	1	Operating Mode (MODE)	Set the thermostat mode.	0		1	OFF Thermostat will not operate
				1			Heating mode (Default)
				2			Cooling mode
				3			ECO mode
28	1	Open window detection	Choose to enable or disable the Open windows detection.	0		0	Open window detection disabled. (Default)
				1			Open windows detection enabled.
29	2	Size of load	Allows the user to decide the power consumption of the connected load in 100W increments.	0			Uses power metering values. (Default)
				1	99		1-99 = 100-9900 Watt Allows the user to set the size of the load, used when connected to a contactor.

33. COMMAND CLASSES

Additional information regarding Command Classes and their functionality:

33.1 Basic Command Class

A Basic command to the device will change the thermostat mode. Uses the following values:
0x00 = OFF (0x00)
0xFF = HEAT (0x01)

If the thermostat is in ECO or COOL mode, 0x00 will still change the mode to OFF. ECO or COOL cannot be enabled with a Basic Set command.

33.2 Meter Command Class

The device supports Meter Command Class Get, and the thermostat will only respond on supported electric meter scales: kWh (accumulated) and Watt (instant).

The device will report when asked:
Rate type: Import (0x01)
Meter type: Electric meter (0x01)

TYPE	SCALE	VALUE	SIZE	PRECISION	REPORT HYSTERESIS
Electric	kWh	0x01	4	1	840s, configurable
Electric	W	0x01	4	1	75W (not configurable), 840s, configurable

33.3 Protection Command Class

Protection Command Class allows you to disable local control of the thermostat, this is separately from the Child Lock function.

To enable the Protection Command Class, either set Parameter 1 (disable buttons) to value 1, enabling Local Protection State 0x02, or send a Protection Set with Local Protection State 0x01 or 0x02.

During Protection State 0x01, the device is protected by a button sequence and allows for no local operation until it is unlocked. To unlock the thermostat while in Protection state 0x01, first press twice on the Left button, then press twice on the Right button and then finally twice on the Center button. This will unlock the thermostat until it goes back to standby, requiring you to unlock it again.

Protection State to 0x02 means that no operation is possible and the thermostat can only be unlocked by setting Parameter 1 to 0, or by holding the Center and Right buttons for 30 seconds.

Thermostat Setpoint Command Class

Thermostat Setpoint is implemented with 3 setpoints, Heating, Cooling and ECO. Supported setpoints are from 5°C - 40°C with 0.5°C increments.

33.4 Thermostat Mode Command Class

It is possible to change the operating mode of the thermostat by sending a Thermostat Mode set command. The accessible operating modes are:

0x00: OFF (Thermostat regulation and display are deactivated).
0x01: Heating Mode (Thermostat regulation is active).
0x02: Cooling Mode (Thermostat regulation is inverted).
0x0B: ECO Mode (Thermostat regulation is active with a separate setpoint from Heating Mode).

33.5 Thermostat Operating State Command Class

The thermostat reports the operating state of the interal relay using this Command Class.
0x00 = Idle
0x01 = Heating (used for Heating and ECO mode)
0x02 = Cooling

33.6 Indicator Command Class

The device supports the Indicator Command Class. The indicator Command Class will flash the display.

33.7 Notification Command Class

The product features security features that announce any action using the Notification Command Class.
The following commands are implemented:

NAME	VALUE	EVEN/ STAT	STATE VARIABLE	STATE VARIABLE AFTER	NOTIFICATION NAME	VALUE
Heat alarm	0x04	State	Heat sensor status	Idle	Overheating detected	0x02
Power management	0x08	State	Overload status	Idle	Overload detected	0x08

33.8 Binary Switch Command Class

Binary Switch commands are used to control external relays associated with group 2.
Uses the following values:
0x00 = OFF
0xFF = ON

This Command Class is based on the operating state of the thermostat (relay on or off).

34. SUPPORTED COMMAND CLASSES

The following table lists all Command Classes supported by the Z-Wave device. The device supports S0, S2 Authenticated security and S2 Unauthenticated security.

ASSOCIATION	VERSION	INSECURE ON SECURE INCLUSION	SECURE ON SECURE INCLUSION
Association	v2		Yes
Association Group Information	v3		Yes
Device Reset Locally Notification	v1		Yes
Firmware Update MD	v5		Yes
Indicator	v3		Yes
Manufacturer Specific	v2		Yes
Multi channel Association	v3		Yes
Multi channel	v4		Yes
Power level	v1		Yes
Security	v1	Yes	
Security v2	v1	Yes	
Supervision	v1	Yes	
Transport Service	v2	Yes	
Version	v3		Yes
Z-Wave Plus Information	v2	Yes	
Application status	v1		Yes
Configuration	v4		Yes
Basic	v2		Yes
Notification	v11		Yes
Meter	v5		Yes
Sensor Multilevel	v11		Yes
Protection	v1		Yes
Thermostat Mode	v3		Yes
Thermostat Operating State	v1		Yes
Thermostat Setpoint	v3		Yes

35. CONTROLLED COMMAND CLASSES

ASSOCIATION	VERSION	INSECURE ON SECURE INCLUSION	SECURE ON SECURE INCLUSION
Binary Switch	2		Yes

36. THERMOSTAT DIMENSIONS

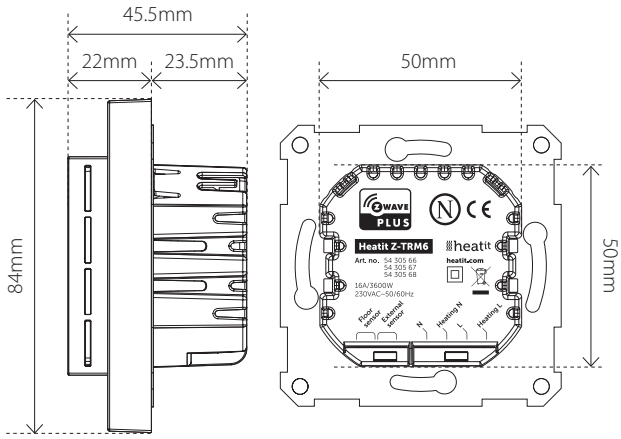

36.1 Thermostat controls

ICON	DESCRIPTION
—	Previous. Decrease set temperature.
≡	Menu confirm. Menu enable.
+	Next. Increase set temperature.

37. MENU STRUCTURE DISPLAY

Hold the middle button for 10 seconds to enter menu.

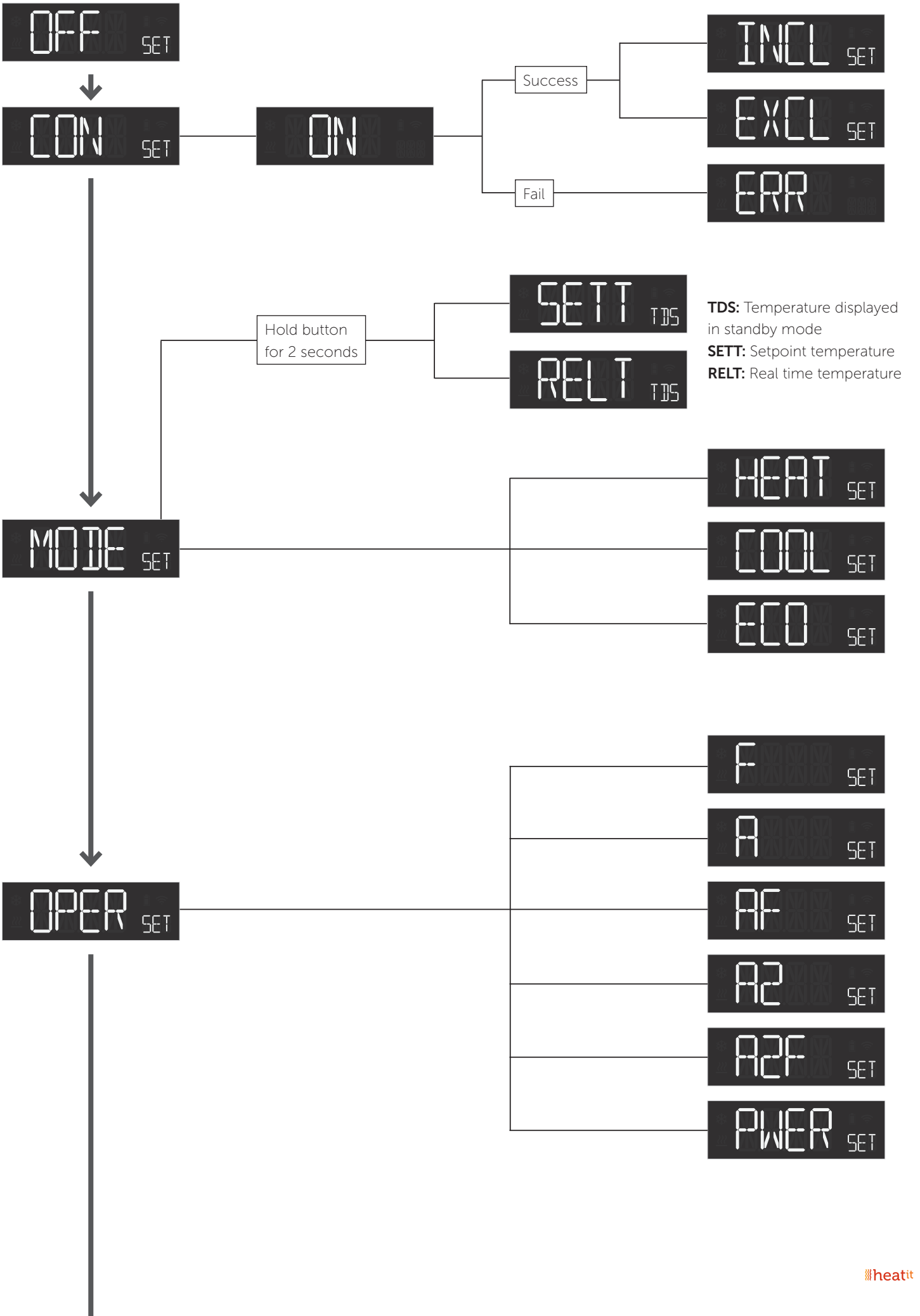

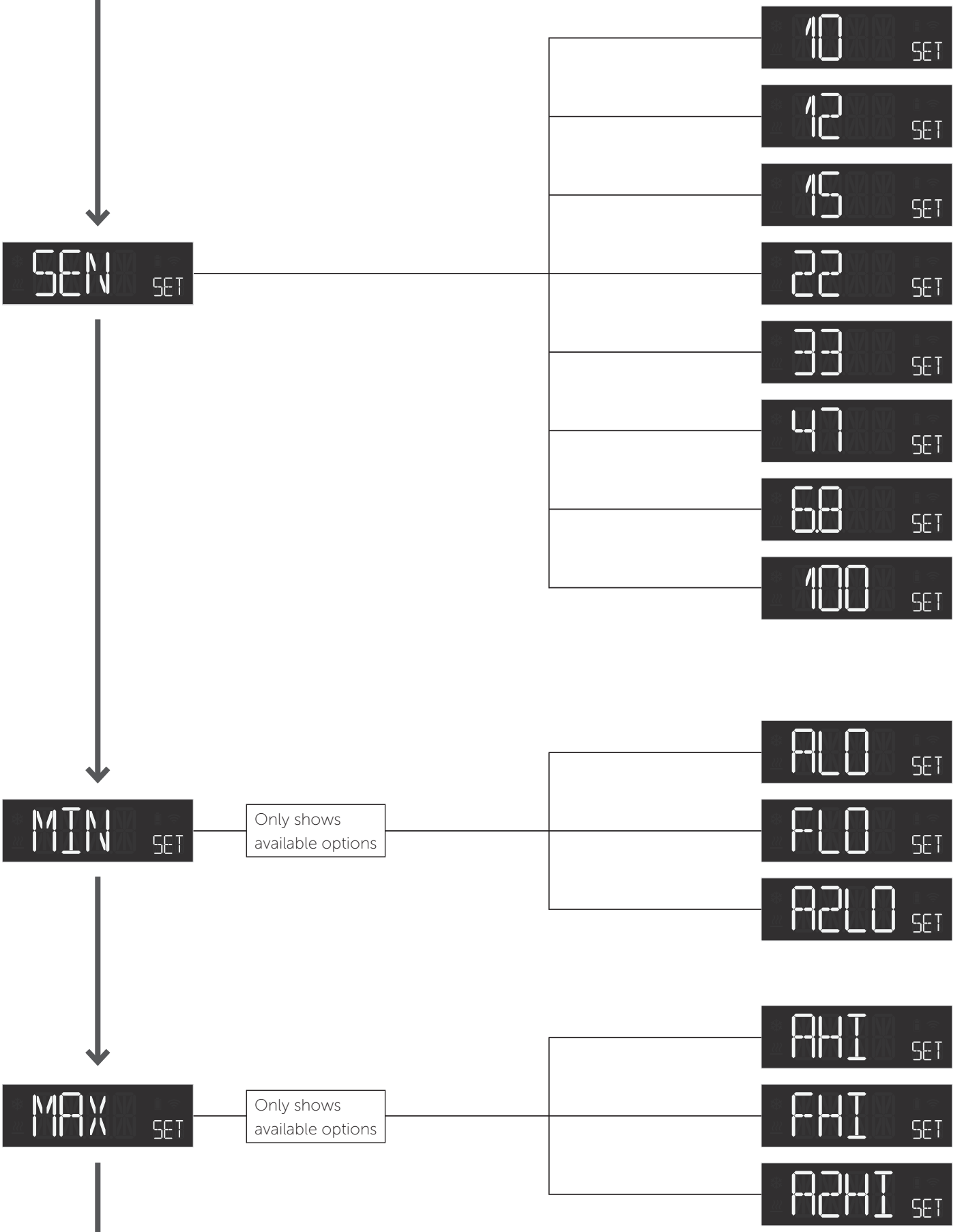
SEN SET
10 SET
12 SET
15 SET
22 SET
33 SET
47 SET
68 SET
100 SET
MIN SET
Only shows available options
ALO SET
FLO SET
A2LO SET
MAX SET
Only shows available options
AHI SET
FHI SET
A2HI SET

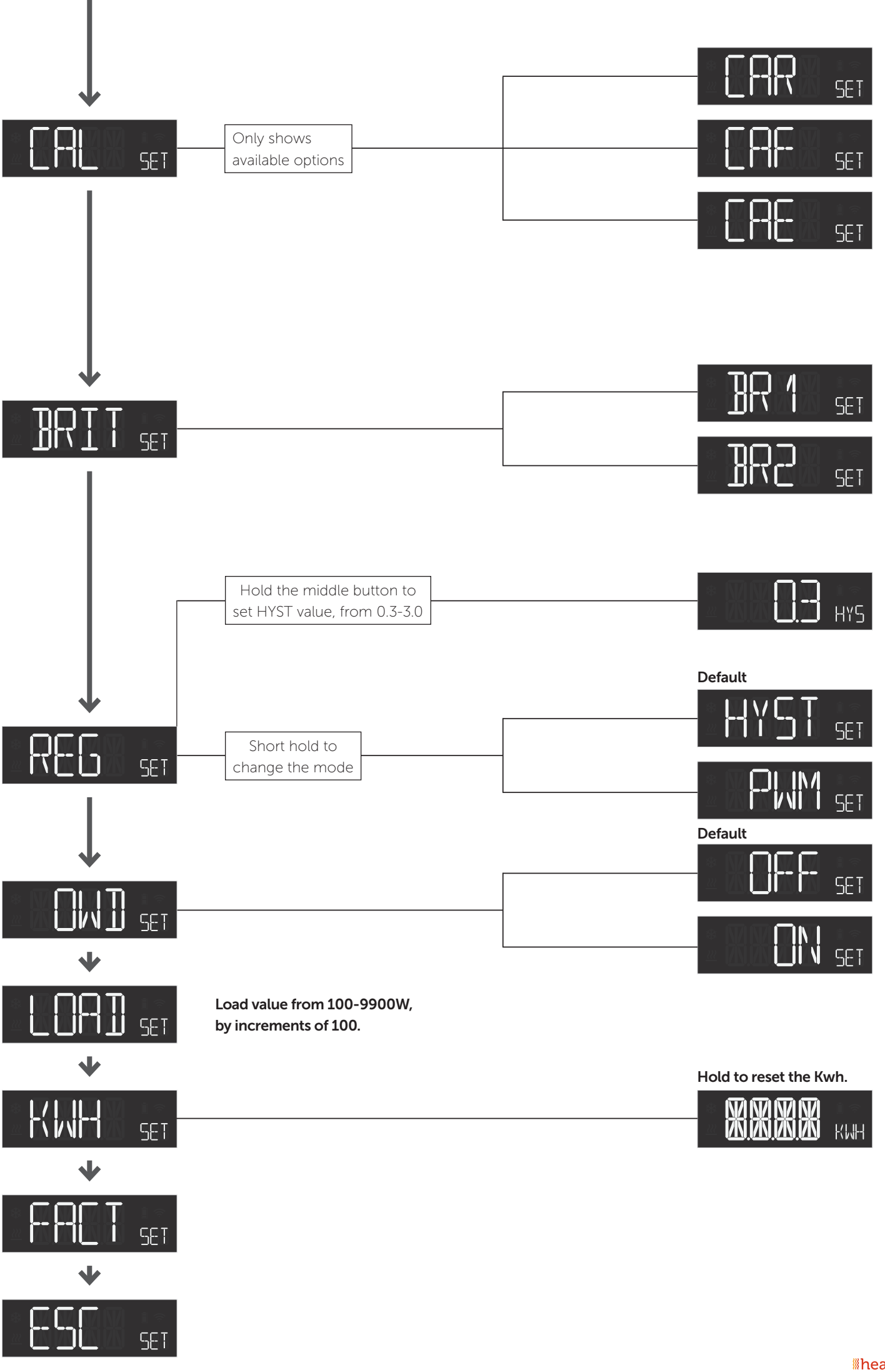
CAL SET
Only shows available options
CAR SET
CAF SET
CAE SET
BRIT SET
BR1 SET
BR2 SET
Hold the middle button to set HYST value, from 0.3-3.0
0.3 HYS
Default
REG SET
Short hold to change the mode
HYST SET
PWM SET
Default
OWD SET
OFF SET
ON SET
LOAD SET
Load value from 100-9900W, by increments of 100.
Hold to reset the Kwh.
KWH SET
0000 KWH
FACT SET
ESC SET

heatit

37.1 Error messages in display

Failed to include

Internal error:
MCU and Z-Wave chip communication failed

Z-Wave error

Internal sensor error

Floor sensor error

External sensor error

Overheat

Overload

37.2 General display messages

Childlock activated

Childlock disabled

Backlight on when device in standby

Backlight off when device in standby

Open window detected

Settings stored

heatit

PRODUCT INFO Heatit Z-TRM6

FEATURES

- Z-Wave thermostat
- Internal room sensor
- External room sensor (wired)
- Floor sensor
- Power regulator
- Temperature limiter
- 3 modes; Heat, Cool og Eco
- SmartStart
- Temperature shown in gateway
- Weekly schedule in gateway
- Supports encryption mode: S0, S2 Authenticated Class, S2 Unauthenticated Class
- Firmware update (OTA)
- Active power metering
- Hysteresis/PWM
- Relay status icon
- Adjustable display brightness
- Single pole switch
- Lock mode/child lock
- Temperature calibration
- Open window detection
- ZeroX detection

The product must be used with a security-enabled Z-Wave controller in order to fully utilize security/encryption.

TECHNICAL DATA

Protocol	Z-Wave, 868.4MHz
Chip	Z-Wave 800 chip
Rated voltage	230VAC 50Hz
Max load	3600W (resistive load) Contactor recommended for loads above 13A
Max current	16A
Power consumption	<2W
Power regulator	Time cycle 0 to 30 min.
Ambient temperature	5°C to 40°C
Temperature range	5°C to 40°C
Storage temperature	-30°C to 70°C
Hysteresis	0.3°C to 3.0°C (default 0.5°C)
Humidity	10% to 85% RH
Compatible with NTC-sensor with values	6.8, 10, 12, 15, 22, 33, 47 or 100kΩ @ 25°C
Range RF	Min. 40 meter
Screw terminals	Max. 2.5mm² 2Nm
IP Code	IP21
Size (LxWxH)	84 x 84 x 45mm
Approvals	Z-Wave Plus v2, CE, Nemko

MAINTENANCE

The device is maintenance-free. Indoor use only.

DISPOSAL GUIDELINES
Do not dispose of electrical appliances as unsorted municipal waste, use separate collection facilities. Contact your local government for information regarding the collection systems available. If electrical appliances are disposed of in landfills or dumps, hazardous substances can leak into the groundwater and get into the food chain, damaging health and well-being.

We have designed this product in accordance with our strict quality requirements (ISO 9001) and environmental requirements (ISO 14001). All electrical installations must be carried out by an authorized electrical installer. The product must be installed in accordance with our installers manual and national building codes. Any wrongful installation, misuse or damage to the product is not covered under warranty.

Heatit Controls AB can not be held liable for any type of errors or omittances in our product information. Product specifications may change without further notice.

heatit CONTROLS

Heatit Controls AB • Läkarvägen 4, 454 31 BRASTAD, SWEDEN
Phone: +47 61 18 77 77 • post@heatit.com • **heatit.com**