Yale® Z-Wave Plus™ Smart Module Installation Guide

Please use this procedure only when network primary controller is missing or otherwise inoperable.

Adding a Yale Z-Wave Plus™ v2 Smart Module to your Assure Lock & Z-Wave™ System

1. Install Yale Smart Module into slot above battery compartment
   IMPORTANT: Batteries must be removed before inserting Yale Smart Module:
   - Remove battery cover
   - Remove batteries
   - Insert Yale Smart Module
   - Reinstall batteries
   - Reinstall battery cover

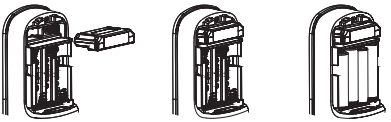

2. Open Z-Wave™ system's smart home or alarm app on your smartphone or tablet
3. If you have SmartStart* enabled with your Z-Wave™ System follow in-app prompts to add a new device If you don't have SmartStart or are not sure, follow steps 4 - 6
4. On your lock keypad, enter your master entry code followed by the ⚙ icon
5. Press the 7 key followed by the ⚙ icon
6. Press the 1 key followed by the ⚙ icon

If prompted, scan QR code

Removing a Yale Z-Wave Plus™ v2 Smart Module from your Assure Lock & Z-Wave™ System

1. Open Z-Wave™ system's smart home or alarm app and follow instructions for removing a device
2. On your lock keypad, enter your master entry code followed by the ⚙ icon
3. Press the 7 key followed by the ⚙ icon
4. Press the 3 key followed by the ⚙ icon
5. Remove Yale Smart Module from slot above battery compartment
   IMPORTANT: Batteries must be removed before removing Yale Smart Module:
   - Remove battery cover
   - Remove batteries
   - Remove Yale Smart Module
   - Reinstall batteries
   - Reinstall battery cover

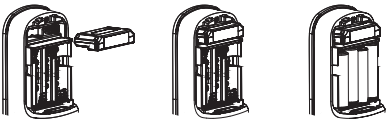

6. If you're adding a new Yale Smart Module, follow instructions included with it

*SmartStart enabled products can be added into a Z-Wave network by scanning the Z-Wave QR Code present on the product with a controller providing SmartStart inclusion. No further action is required and the SmartStart product will be added automatically within 10 minutes of being switched on in network vicinity.

P/N AYR-MOD-ZW3-MNL-0015 Rev A

Warning: Changes or modifications to this device, not expressly approved by ASSA ABLOY Residential Group could void the user's authority to operate the equipment.

This device is a security enabled Z-Wave Plus™ v2 product that is able to use encrypted Z-Wave Plus™ v2 messages to communicate to other security enabled Z-Wave Plus™ v2 products. This device must be used in conjunction with a Security Enabled Z-Wave™ Controller in order to fully utilize all implemented functions. This product can be operated in any Z-Wave™ network with other Z-Wave™ certified devices from other manufacturers. All non-battery operated nodes within the network will act as repeaters regardless of vendor to increase reliability of the network.

FCC:

Class B Equipment

This equipment has been tested and found to comply with the limits for a Class B digital device, pursuant to Part 15 of the FCC Rules. These limits are designed to provide reasonable protection against harmful interference in a residential installation. This equipment generates, uses, and can radiate radio frequency energy and, if not installed and used in accordance with the instructions, may cause harmful interference to radio communications. However, there is no guarantee that interference will not occur in a particular installation. If this equipment does cause harmful Interference to radio or television reception, which can be determined by turning the equipment off and on, the user is encouraged to try to correct the interference by one or more of the following measures:

- Reorient or relocate the receiving antenna.
- Increase the separation between the equipment and receiver.
- Connect the equipment into an outlet on a circuit different from that to which the receiver is connected.
- Consult the dealer or an experienced radio/TV technician for help.

THIS DEVICE COMPLIES WITH PART 15 OF THE FCC RULES. OPERATION IS SUBJECT TO THE FOLLOWING TWO CONDITIONS. (1) THIS DEVICE MAY NOT CAUSE HARMFUL INTERFERENCE, AND (2) THIS DEVICE MUST ACCEPT ANY INTERFERENCE RECEIVED, INCLUDING INTERFERENCE THAT MAY CAUSE UNDESIRED OPERATION.

This equipment complies with FCC radiation exposure limits set forth for an uncontrolled environment. This equipment should be installed and operated with minimum distance 20cm between the radiator & your body.

Industry Canada:

Section 7.1.2 of RSS-GEN Under Industry Canada regulations, this radio transmitter may only operate using an antenna of a type and maximum (or lesser) gain approved for the transmitter by Industry Canada. To reduce potential radio interference to other users, the antenna type and its gain should be so chosen that the equivalent isotropically radiated power (e.i.r.p.) is not more than that necessary for successful communication.

En vertu des règlements d'Industrie Canada, cet émetteur radio ne peut fonctionner avec une antenne d'un type et un maximum (ou moins) approuvés pour gagner de l'émetteur par Industrie Canada. Pour réduire le risque d'interférence aux autres utilisateurs, le type d'antenne et son gain doivent être choisies de façon que la puissance isotrope rayonnée équivalente (PIRE) ne dépasse pas ce qui est nécessaire pour une communication réussie.

Section 7.1.3 of RSS-GEN This Device complies with Industry Canada License-exempt RSS standard(s). Operation is subject to the following two conditions: 1) this device may not cause interference, and 2) this device must accept any interference, including interference that may cause undesired operation of the device.

Cet appareil est conforme avec Industrie Canada RSS standard exemptes de licence(s). Son fonctionnement est soumis aux deux conditions suivantes: 1) ce dispositif ne peut causer des interférences, et 2) cet appareil doit accepter toute interférence, y compris les interférences qui peuvent causer un mauvais fonctionnement du dispositif.

CAN ICES-3B/NMB-3B

Yale Locks & Hardware

24/7 Tech Support: 1-855-492-0505 • www.yalehome.com

Yale® is a registered trademark of ASSA ABLOY Residential Group. Other products' brand names may be trademarks or registered trademarks of their respective owners and are mentioned for reference purposes only. © Copyright 2020. All rights reserved. Reproduction in whole or in part without the express written permission of ASSA ABLOY Residential Group is prohibited.

Assure Lock 2 Touch

Keyed YRD420-F

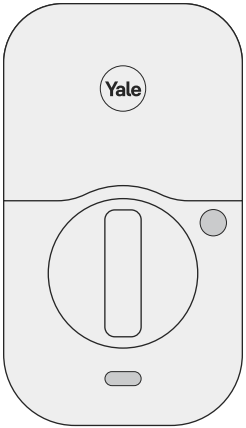

Download Yale Access App

Create an account if you don't already have one, and tap "Set Up a Device".

Note: If you have an account with the August App, use the same username and password for the Yale Access App.

Install Your Lock

Follow the step-by-step Installation Guide in this manual (pages 8-22), or refer to the app for installation instructions with helpful videos.

Note: If you use the app, please tear off the Door Checker and the Marking Template (pages 3-6) to use when prompted.

Set Up and Use Your Lock

Create permanent entry codes, issue temporary entry codes for guests, operate your lock with your phone and more (pages 23-31).

Trusted Every Day

P/N YRD420-KD-F Rev A

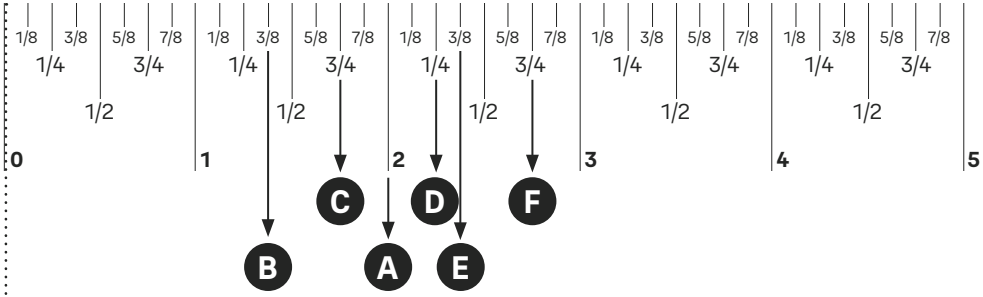

Tear Along the Dotted Line

Door Checker Part 1

See Reverse for Part 2 →

Measure Clearance

✓ Greater than A

✕ Less than A
(Your door is not a match)

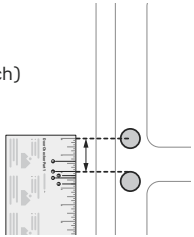

A. 2" minimum clearance between top of the door knob and center of deadbolt hole.

Measure Door Thickness

✓ B, C or D

✕ Less than B or greater than D
(Your door is not a match)

B. 1-3/8" door thickness; use **teal** (shortest) **screws**.

C. 1-3/8" - 1-3/4" door thickness; use black (medium) **screws**.

D. 1-3/4" - 2-1/4" door thickness; use **silver** (longest) **screws**.

Measure Backset

✓ Equals E or F

✕ Doesn't equal E or F
(Your door is not a match)

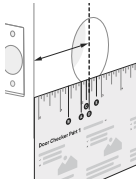

E. 2-3/8" backset, use out of box latch setting.

F. 2-3/4" backset, adjust latch setting (Step 2, point 1 of this manual).

P/N YRD420-KD-F Rev A

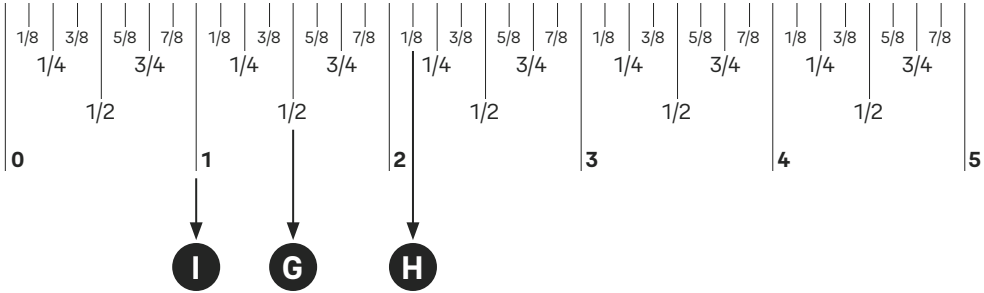

Door Checker Part 2

See Reverse for Part 1 →

Tear Along the Dotted Line

Measure Face Bore

✓ Equals G or H

✎ Less than G
(Adjust diameter to G or H)

✕ Greater than H
(Your door is not a match)

Measure Edge Bore and Strike Pocket

✓ Equals I

✎ Less than I
(Adjust diameter to I)

✕ Greater than I
(Your door is not a match)

Door (Edge Bore)

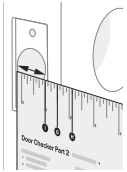

Frame (Strike Pocket)

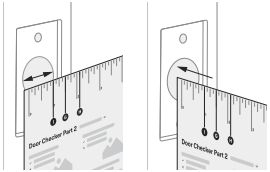

Diameter Depth

G. 1-1/2" face bore diameter.

H. 2-1/8" face bore diameter.

I. 1" edge bore diameter;

1" strike pocket diameter and depth.

⚠ Minimum strike pocket depth is 1".

P/N YRD420-KD-F Rev A

Marking Template for 2-1/8” (54mm) Face Bore

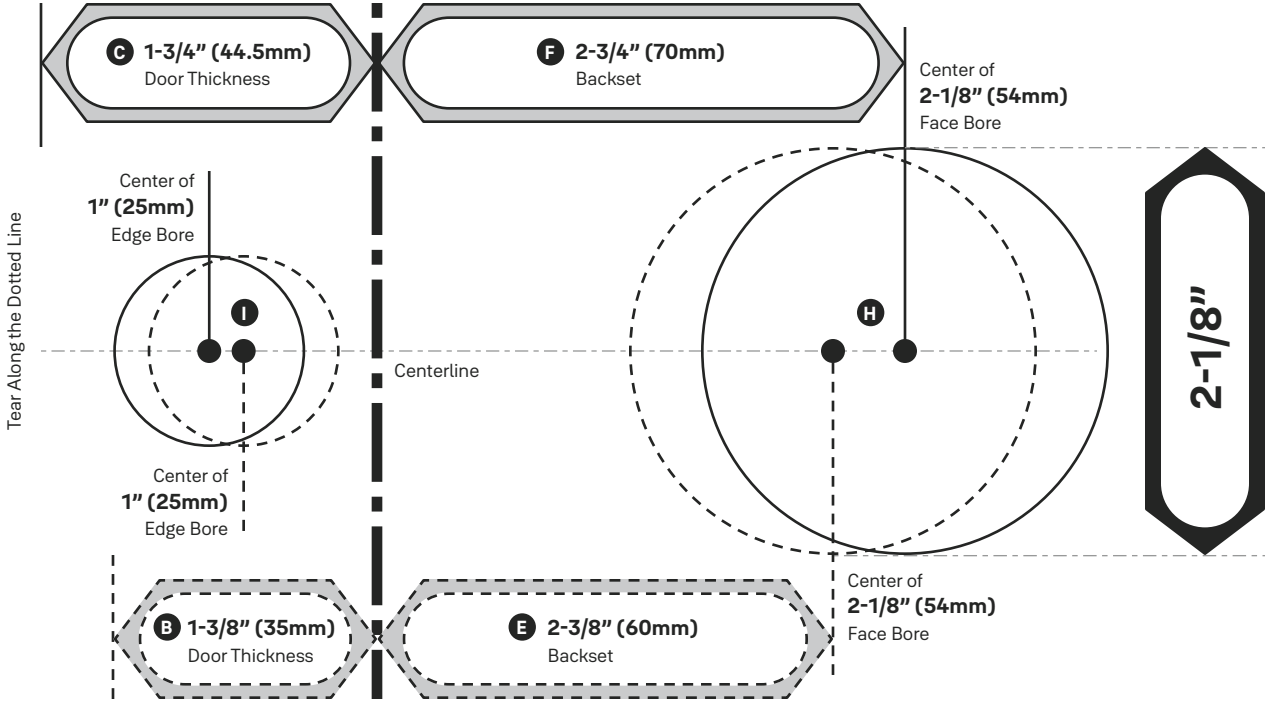

Tear Along the Dotted Line

P/N YRD420-KD-F Rev A

Marking Template for 1-1/2” (38mm) Face Bore

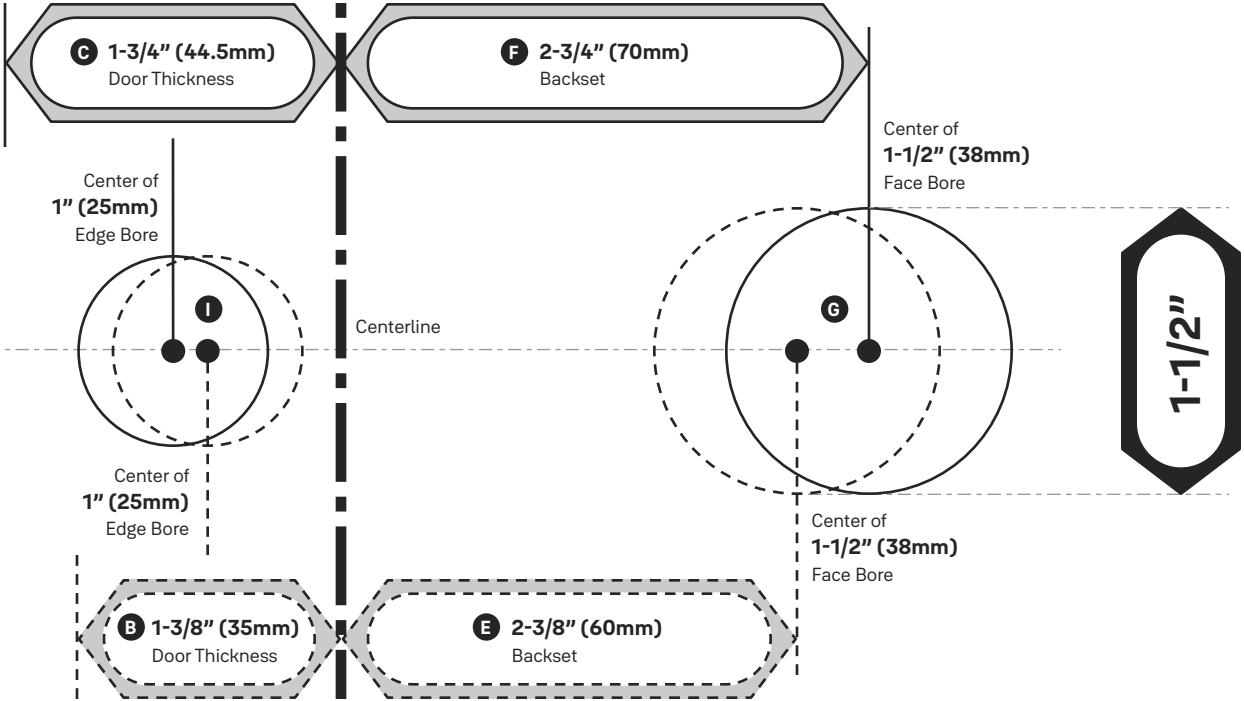

P/N YRD420-KD-F Rev A

Tear Along the Dotted Line

In the Box

Lock

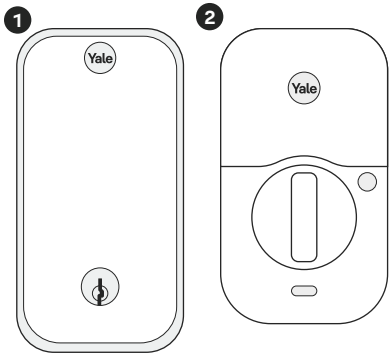

Hardware

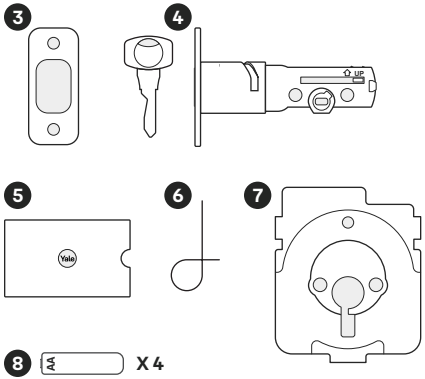

Add-Ons

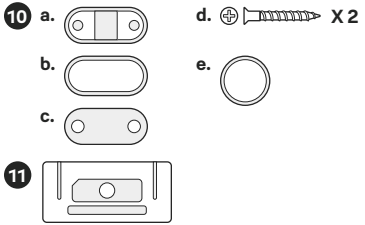

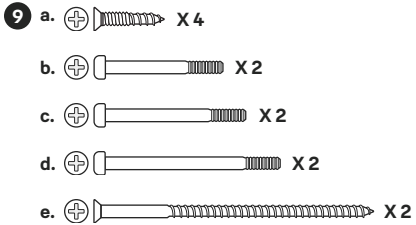

P/N YRD420-KD-F Rev A

1. Exterior Keypad
2. Interior Lock
3. Strike Plate
4. Adjustable Deadbolt & Key
5. Manual
6. Reset Pin
7. Mounting Plate
8. AA Batteries
9. Screws
   - **a.** Strike Plate and Deadbolt Screws
   - **b.** Teal Screw Set B
   - **c.** Black Screw Set C
   - **d.** Silver Screw Set D
   - **e.** Optional Security Strike Plate Screws
10. DoorSense
    - **a.** Housing
    - **b.** Cover
    - **c.** Mounting Tape
    - **d.** Screws
    - **e.** Flush Mount Cap
11. Smart Module
    (Included with select models)

Installation Guide

Required Tools

1

2

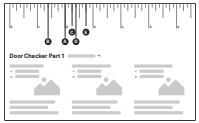

You Might Also Need

3

4

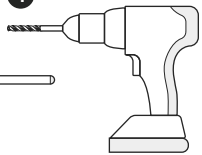

6

5

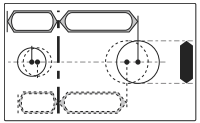

7

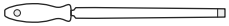

8

9

1. **Phillips Head Screwdriver**
2. **Door Checker**
   (tear off pages 3-4 of this manual)
3. **Tape Measure**
4. **Drill**
5. **Marking Template**
   (tear off pages 5-6 of this manual)
6. **Pencil**
7. **Wood Mortise Chisel**
8. **Utility Knife**
9. **Level**

⚠ Failure to follow the Installation Guide precisely could result in damage to the product, voiding the factory warranty, and could lead to failure of the product to provide access.

1a Remove Existing Deadbolt

If you have a new door, please proceed to step 1b. →

If you have a deadbolt on your door, use the diagram to help you remove it.

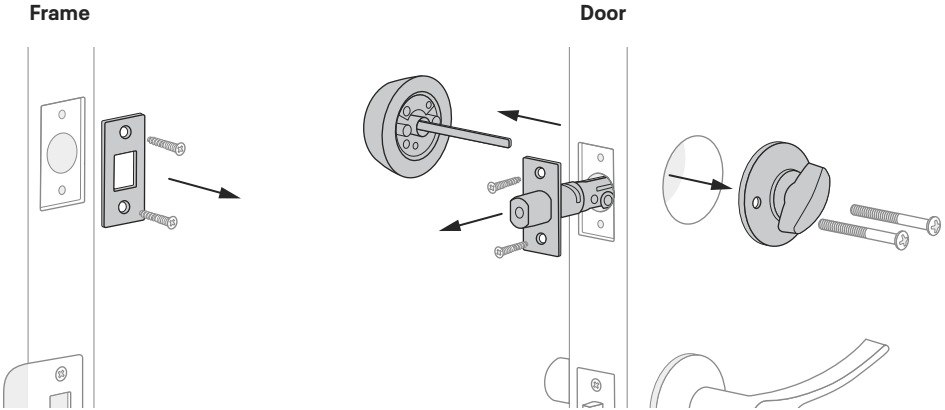

⚠ Keep your old deadbolt until your new lock has been successfully installed.

1b Check Door Measurements

If your door doesn't have holes, please proceed to step 1c. →

Tear off the **Door Checker** (pages 3-4) and follow the guidelines on **both sides** to measure each aspect of your door and frame. There are some cases when existing holes cannot be adjusted to be compatible.

If you need to make adjustments, go to **step 1c** and find the closest match to each aspect of your door on the **Marking Template**.

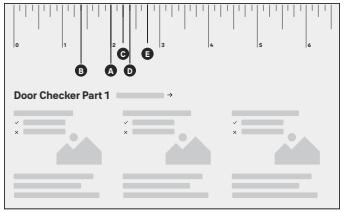

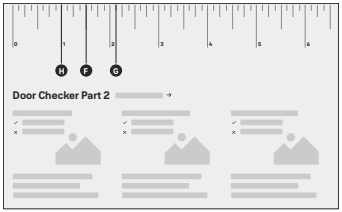

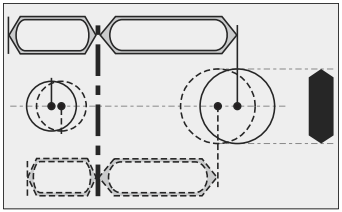

Please do not drill any holes until you confirm that your door is compatible.

If you have confirmed that the existing holes are compatible with your new lock, please proceed to step 2 (skip step 1c).

1c Make or Adjust Holes

Skip this step if you have confirmed that the existing holes are compatible (step 1b).

1. Tear off the **Marking Template** (pages 5-6), and choose the preferred face bore diameter (**2- 1/8"** or **1-1/2"**) on either side of the template.

2. Tape the Marking Template onto the door as shown.

3. Check the door thickness. It should match either the shape with **solid** outlines (**1-3/4"**), or the one with **dashed** outlines (**1-3/8"**).
   - **3a.** Use **solid** lines as a template for **1-3/4"** door thickness.
   - **3b.** Use **dashed** lines for **1-3/8"** door thickness.

4. Choose your preferred backset. It should match either the shape with **solid** outlines (**2-3/4"**), or the one with **dashed** outlines (**2-3/8"**).
   - **4a.** Use **solid** lines as a template for **2-3/4"** backset.
   - **4b.** Use **dashed** lines for **2-3/8"** backset.

5. Drill holes in your door where marked.

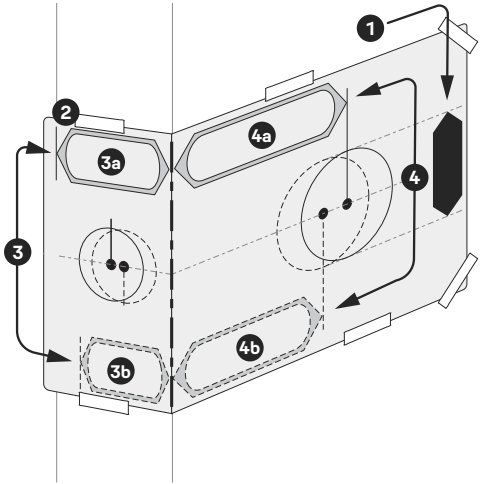

2 Install Deadbolt Latch

1. Correct deadbolt length is based on the backset. Refer to measurements **E** and **F** on the **Door Checker** (page 3) to verify backset.

E 2-3/8" Backset
(Out of box)

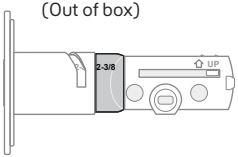

F 2-3/4" Backset
(To adjust, twist neck by holding the body stable)

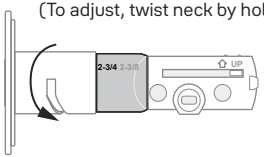

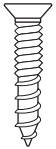

x 2 for Deadbolt Latch
x 2 for Strike Plate
(Actual size)

2. Align strike plate with deadbolt latch.

2a. (Optional) Security screws can be used in place of the small strike plate screws.

3. Make sure UP arrow on the deadbolt is facing upwards.

4. Deadbolt latch must be in an unlocked position.

Note: If the deadbolt latch is extended, use a small flathead screwdriver to rotate slot until deadbolt latch is retracted.

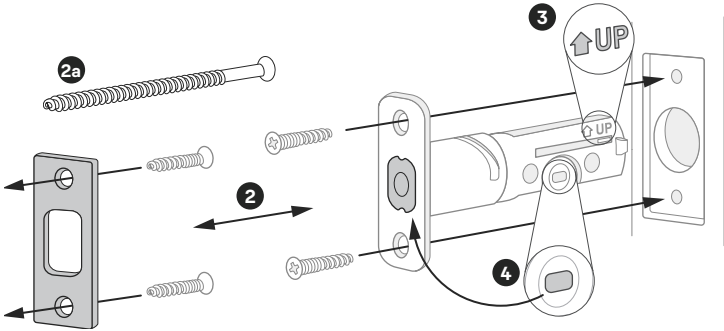

P/N YRD420-KD-F Rev A

3 Install Exterior Keypad

1. Refer to measurements **G** and **H** on the **Door Checker** (page 4) to measure face bore hole. If the hole is **less than 2-1/8"** (**H**), remove adapter by twisting it off the body of the lock.

> ⚠ **Install your lock with the door open.**
> Do not close your door until all the steps are completed.

2. Make sure your deadbolt latch is in an unlocked position. Refer to **step 2, point 4** (page 12) for guidance on how to retract it, if needed.
3. Slide the tailpiece through the deadbolt latch slot.
4. Guide the wire cable under the deadbolt.
5. Slide the keypad in place, making sure it's on the exterior part of your door.

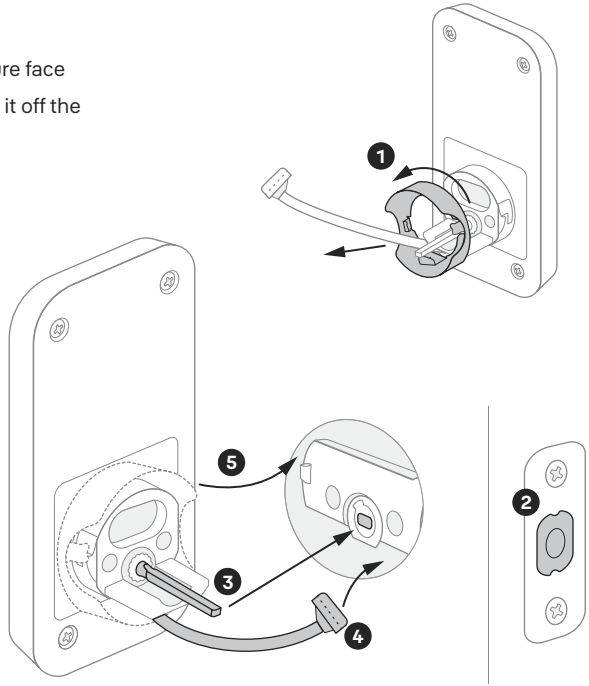

4 Install Mounting Plate

1. Refer to measurements **B**, **C**, and **D** on the **Door Checker** (page 3) to select screws.

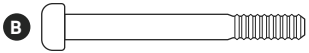

x 2 Teal Screws (1-3/8" door thickness)

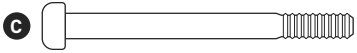

x 2 Black Screws (1-3/8" - 1-3/4" door thickness)

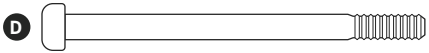

x 2 Silver Screws (1-3/4" - 2-1/4" door thickness)

2. Route the wire cable into the designated slot in the mounting plate.
3. Guide posts of the mounting plate into the holes on the exterior keypad.
4. Slide tailpiece through the designated slot in the mounting plate.
5. Tighten screws with a screwdriver to secure the mounting plate. As you tighten the screws, make sure the mounting plate and the keypad are straight.

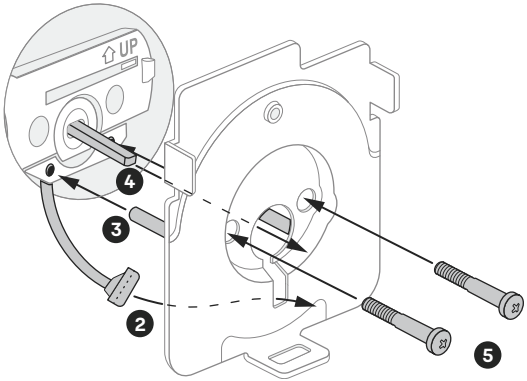

⚠ Ensure that the wire cable is not pinched to prevent it from reducing your lock's battery life.

5 Attach Wire Cable to Interior Lock

1. Remove battery cover by pulling it upwards off the body of the interior lock.

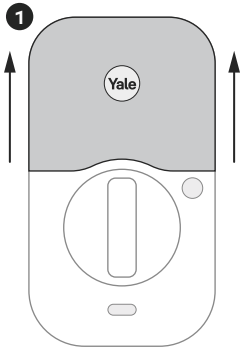

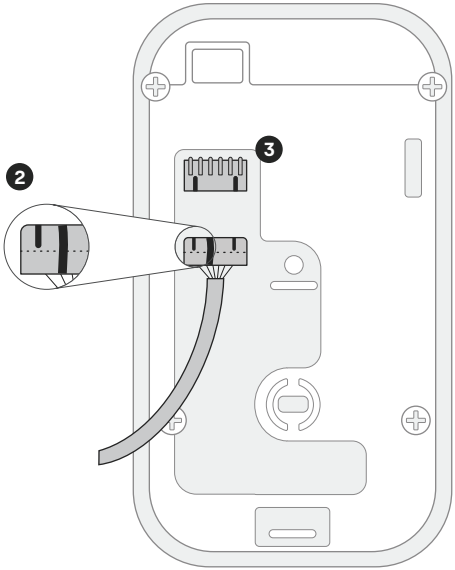

2. Make sure the side of the cable end with the ridges and the marked line faces outward.

3. Push cable into the designated slot until you hear a click.

6 Install Interior Lock

1. Make sure the tailpiece slot is in horizontal position. Use the thumbturn to adjust if needed.
2. Slide the tailpiece through the designated slot on the back of the thumbturn.
3. Press the lock against the mounting plate, adjusting its position until it clicks into place and the bottom of the lock is held in place.
4. Tighten the one pre-installed screw.

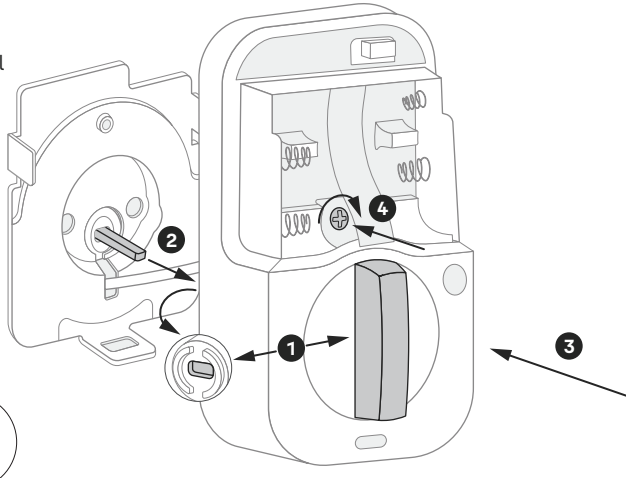

⚠ When fully tightened, lock should be flush to door.

7 Test Thumbturn and Key

If deadbolt latch does not lock or unlock with the **key** (from the outside) or the **thumbturn** (from the inside):

- Ensure that the deadbolt latch is centered in the face bore hole;
- Ensure that the tailpiece is positioned horizontally and inserted through deadbolt latch slot (**step 3, point 3**) into the thumbturn slot (**step 6, point 2**).

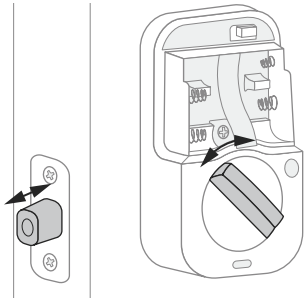

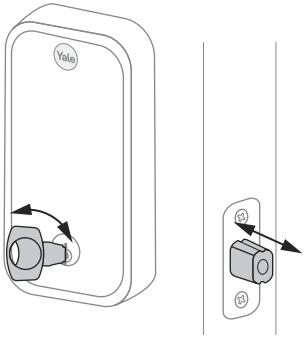

Smooth deadbolt latch operation will enhance your battery life.

8 Install Yale Smart Module (Optional)

If your lock model does not include a Smart Module, please proceed to step 9a. →

Insert Yale Smart Module into the designated slot at the top of the body of the lock.

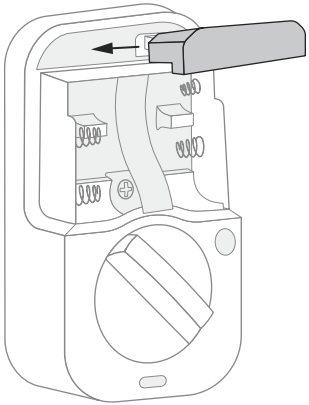

Batteries must **not** be installed when inserting or removing Yale Smart Module.

Note: If you purchased your module separately, check compatibility with your Assure 2 Touch. See table below for the list of compatible modules.

AYR-MOD-ZWV-USA	Z-Wave 500 series Module
AYR-MOD-WF1-USA	Wi-Fi Module

9a Install DoorSense (Optional)

If you do not wish to install DoorSense, please proceed to step 10. →

DoorSense is a magnetic sensor installed on your door frame that can keep track of when the door is opened and closed.

For **surface mount** instructions, please proceed to **step 9b**. →

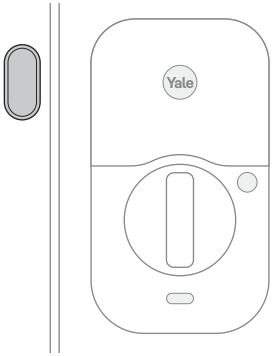

Surface mount is a quick and easy option to secure DoorSense on the inside of your door frame.

For **flush mount** instructions, please proceed to **step 9c**. →

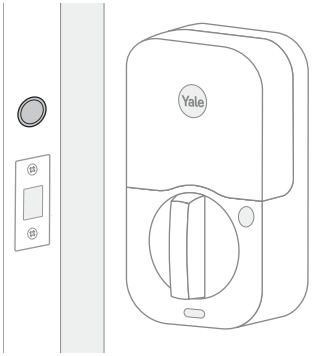

Flush mount is installing DoorSense into the edge of the door frame. It provides a cleaner look with more robust performance but requires drilling.

9b DoorSense Surface Mount

1. Remove one side of the backing from the adhesive.
2. Attach tape to the back of the DoorSense, ensuring it is aligned with the edges of the device and the screw holes.
3. Remove the remaining backing from the adhesive.
4. Determine mounting location. For optimal performance, DoorSense should be mounted within 1-1/2" from the edge of your door frame.
5. Ensure DoorSense is in proper position by center aligning it with the Yale logo, and adhere it to the door frame.
6. Tighten pre-installed screws and attach cover.

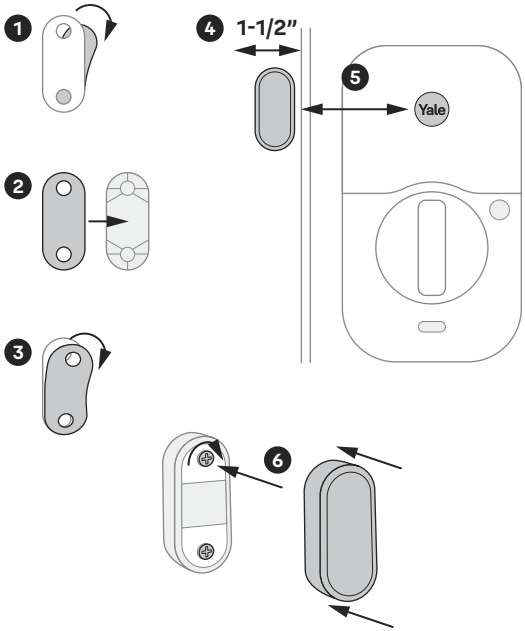

⚠ It is recommended to complete the last step after your lock is calibrated with the app to ensure you are able to retrieve accurate door state readings before modifying your frame.

9c DoorSense Flush Mount

1. Take off DoorSense cover.

2. Push the magnet out of the housing.

3. Expose the adhesive on the magnet cap by removing the blue backing.

4. Press the magnet onto the cap so that the notches interlock.

5. Determine mounting location. DoorSense should be mounted 1-1/2" at most from the top edge of the strike plate.

6. Mark a hole that's horizontally centered on the door frame and is 5/8" in diameter.

7. Drill a 1/2" deep hole where marked.

8. Insert DoorSense into the hole.

Note: If it is too snug to push in by hand, protect the frame with a piece of scrap wood and use light blows with a hammer or mallet.

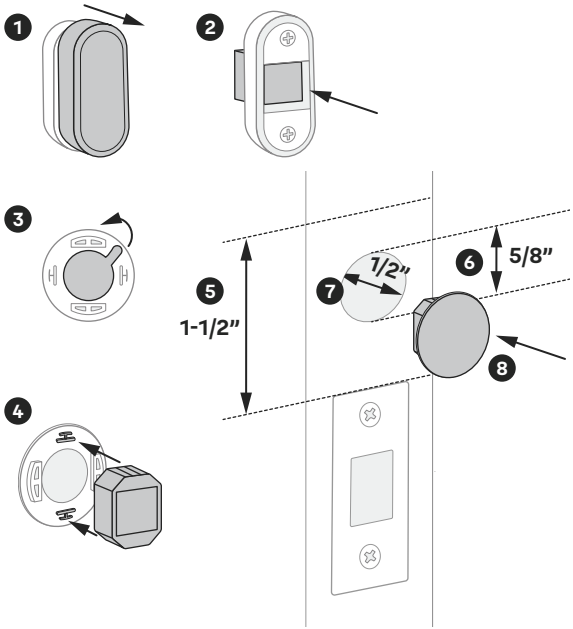

10 Install Batteries and Replace Cover

Make sure you have Yale Access App downloaded and an account created.
Once batteries are inserted, lock is ready to be set up with the app.

1. Before installing batteries, make sure the deadbolt latch is unlocked.

2. Place ribbon behind batteries for easy battery removal.

3. Install 4 batteries.

4. Replace cover.

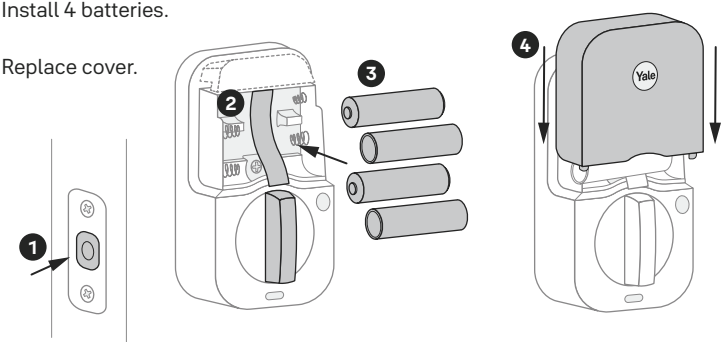

5. Once batteries are inserted, the entire keypad will light up in a clockwise pattern. Once this happens, the lock is in pairing mode. Open Yale Access App, tap on "Set Up a Device", and follow the in-app setup instructions.

Note: If the lock exits pairing mode, simply press the Yale logo to restart.

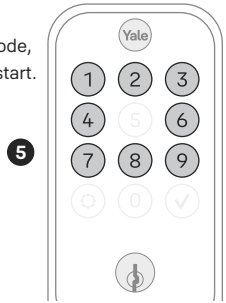

Using Your Lock

Exterior Keypad

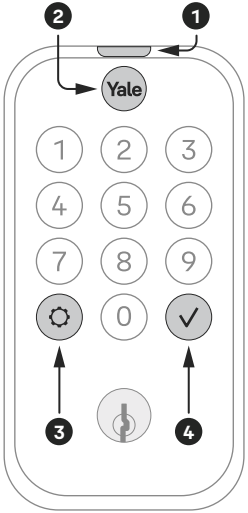

To **lock** your door

Press Yale

To **unlock** your door

- **With fingerprint***

  Touch Yale

- **With entry code**

  Press Yale →

  Enter entry code →

  Press ✓

Interior Lock

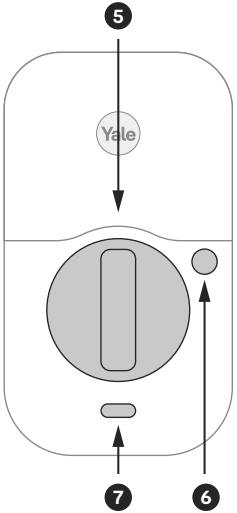

1. **Exterior LED Indicator**
2. **Wake / One-Touch Locking / Fingerprint Scanner**
3. **Warnings / Menu**
4. **Submit Entry Code**
5. **Thumbturn**
6. **Passage Button**
7. **Interior LED Indicator**

* Make sure that you're using a registered finger, and that it's clean and dry.

LED Alerts

Exterior Keypad Alerts	
Gear flashes amber	Low battery level 1
Gear flashes red	Low battery level 2
Gear flashes red, then stays red	Low battery level 3
Checkmark flashes	Pairing success
Any key, then gear flash red	Jammed lock
Gear flashes white	Pairing
Gear flashes red during pairing	Pairing failure

Interior Lock Alerts	
LED indicator flashes blue	Low battery levels 1, 2, and 3
LED indicator flashes red	Locked state
LED indicator flashes green	Unlocked state
LED indicator turns green for 3 seconds	Pairing success
LED indicator turns red for 3 seconds	Pairing failure

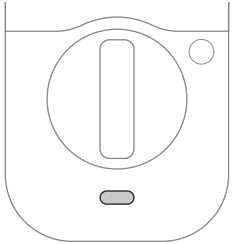

Resetting Your Lock to Factory Defaults

If you have set up your lock with Yale Access App, you should reset it using the app.
Go to your lock's settings and choose "Factory Reset".

1. Remove one battery.
2. Insert reset pin into the designated reset hole.
3. Press and hold the reset pin.
4. While holding the reset pin, reinsert battery.
5. Keep holding the reset pin for 5 more seconds.
6. Take out the reset pin.

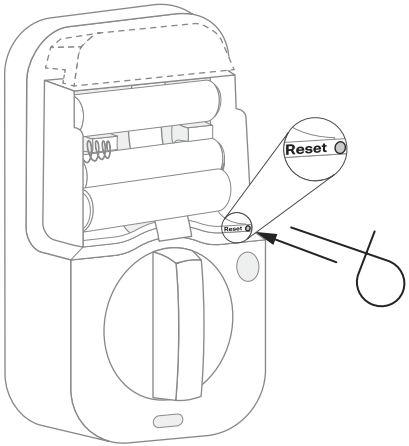

Features

DoorSense	• DoorSense keeps track of when your door is closed or open.
Fingerprint	• Unlock your door by scanning your fingerprint.
Entry Codes	• Entry codes are used to unlock your door. • Create entry codes from the "Guest List" tab in the Yale Access App. • You can set permanent, recurring, and temporary entry codes. • An unlimited number of entry codes can be created or deleted as long as you have Bluetooth or Wi-Fi connection to the lock.
Auto-Lock	• Auto-Lock automatically locks the door for you. • It can be set to lock on a timer for as short as 30 seconds, or as long as 30 minutes. • When using the Auto-Lock feature with DoorSense, your door will not lock until it is closed. • Auto-Lock can be set up in the lock settings of the app.
Auto-Unlock	• Auto-Unlock knows when you arrive and unlocks the door as you approach. • Auto-Unlock can be set up in the lock settings of the app.
Passage Mode	• Use passage mode when you want to disable Auto-Lock for an extended period of time. • Simply press and hold the Passage button on the inside of the lock until you hear a chime to turn it on. • To turn passage mode off, lock your door or press and hold the Passage button until you hear a chime.
Integrations	• Yale Access products work in harmony with some of your favorite smart home brands. • Integrations can be set up in the Yale Access App from the "Works With" menu option.

App Settings

You can find these and other settings in the Yale Access App.

Security	
Hide Entry Codes	If turned on, all entry codes within the app will be hidden from view.
Verified Access	If turned on, biometric/passcode authentication is required to operate the lock using the app.

Notifications	
Smart Alerts	Create alerts you wish to receive from the app.

Automation	
Auto-Lock	Door will automatically lock, either when door is closed (with DoorSense), or on a timer.
Auto-Unlock	Door will automatically unlock when you arrive home.
DoorSense	Allows you to know when your door is opened or closed.

Information	
Programming Code	This code is automatically created by the Yale Access App and used to access programming features: handing, Smart Module integration, and diagnostics. This code cannot be used to unlock the door. Find your programming code in the Yale Access App, enter this code on the keypad and press the gear symbol.

App Settings

You can find these and other settings in the Yale Access App.

Advanced Device Settings			
Device Settings	**Volume**	You can turn the lock volume on or off, and set it to high or low.	
	Inside Indicator Light	When turned on, it will show the active status (e.g. locked) of the lock. This light will also inform you when the batteries are low, passage mode is enabled, and pairing is successful.	
	One-Touch Locking	Lock the keypad by touching the Yale logo.	
Keypad Settings	**Keypad Security**	**Shutdown Timing** (Default: 60 sec)	The lock will shut down for the set period of time and not allow operation after the wrong code entry limit has been reached.
		Wrong Code Limit (Default: 5 times)	After the set number of unsuccessful attempts at entering a valid entry code, the lock will shut down and not allow operation for 60 seconds.
	Operating Mode	**Normal** (Default)	All entry codes will work and the lock can be unlocked and locked using the app and voice assistants.
		Vacation	When enabled, all entry code access will be restricted. Users can still lock and unlock the door with the app.

Lock Operations Troubleshooting

Lock does not respond.	• Press the Yale logo to activate the keypad. • Verify contact with the logo. • If keypad numbers are visible, check if they respond when pressed. • Check batteries are installed and oriented correctly in battery case. Replace batteries* if needed. • Check that the keypad wire is fully connected and not pinched.
Lock does not respond – door is locked and unaccessible.	• Batteries may not have enough power. Replace batteries*. • Use mechanical key to unlock the door.
Lock is on for a while then shows no reaction. Lights dim.	• Batteries do not have enough power. Replace batteries*.
Lock chimes indicating code acceptance but door will not open.	• Check for any foreign objects between door and frame. • Check that the wire is firmly connected to the interior lock.
Lock operates to allow access but will not automatically unlock.	• Check to see if Auto-Lock is enabled. • Disable Auto-Lock to lock the door manually.
Lock responds "Low Battery".	• Replace all four (4) batteries* with new AA alkaline batteries.

* After replacing your batteries, it's highly recommended to use your app to lock or unlock your device. This will allow the app to connect to the lock to ensure that the internal time of the device is correct.

Lock Operations Troubleshooting

Lock does not unlock with fingerprint.	• Verify that you're using a registered finger. • Make sure the finger you're using is clean and dry.
Entry code will not register.	• If low battery indicator is lit, replace batteries*. • Verify that your entry code consists of 4 to 8 digits. • Make sure you are using different entry codes for different users. • Entry code must be entered while the keypad is active (tap on the Yale logo to wake it up and enter the entry code within 5 seconds).
Upon entering an entry code and pressing the Check key, the lock displays "Invalid Code" error or lock times out without responding.	• Verify entered code is a valid, previously programmed, 4 to 8 digit code. • Vacation mode might be on. Only an admin user can switch vacation mode to normal in the app.
Upon entering an entry code and pressing the Check key, lock responds "Wrong Number of Digits".	• The digits entered were incorrect or incomplete. Re-enter the correct code followed by the Check key.
Deadbolt does not extend when locking the door with the keypad.	• Lock was not handed properly. Find the setting called "Lock Handing" to fix this issue.
Lock operates but makes no sound.	• Check in the app settings if volume is set to off.

* After replacing your batteries, it's highly recommended to use your app to lock or unlock your device. This will allow the app to connect to the lock to ensure that the internal time of the device is correct.

Hardware Troubleshooting

Deadbolt grinds and will not extend to lock when using an entry code but thumbturn locks and unlocks smoothly.	• Lock was not handed properly. Find the setting called "Lock Handing" to fix this issue.
Deadbolt is hitting the strike plate.	• Reposition the strike plate to align with deadbolt.
Deadbolt is not fully extending.	• Increase depth of the deadbolt strike pocket in the frame.
Resistance when locking deadbolt that requires pushing or pulling on the door to align deadbolt and latch.	Adjust your existing knob, lever, or handleset strike plate. Latch engagement into the strike is the main component used for door alignment. To adjust knob / lever / handleset strike plate: 1. Remove plate from door frame with a hand screwdriver. Note: Using an electric driver may strip screw heads or enlarge screw holes. 2. Locate tab on strike plate. Bend the tab towards surface of strike. Note: A small change may be all that is required. 3. Reinstall strike plate using a screwdriver and test again. 4. If door cannot be adjusted sufficiently with strike tab, both knob/lever/handleset latch and deadbolt could require adjustment – we suggest you contact a local locksmith for assistance. For help with misalignments, watch our door alignment video: US.YaleHome.com/Support

Use:

Use of the Works with Apple badge means that an accessory has been designed to work specifically with the technology identified in the badge and has been certified by the developer to meet Apple performance standards.

Apple is not responsible for the operation of this device or its compliance with safety and regulatory standards.

Apple®, Apple Home™, Apple Watch®, HomeKit®, and iPhone® are trademarks of Apple Inc., registered in the U.S. and other countries and regions.

Google, Google Play and Google Home are trademarks of Google LLC.

Amazon, Alexa and all related logos are trademarks of Amazon.com, Inc. or its affiliates.

Wi-Fi is a registered trademark of Wi-Fi Alliance®.

The Bluetooth® word mark and logos are registered trademarks owned by Bluetooth SIG, Inc. and any use of such marks by ASSA ABLOY Residential Group Inc. is under license. Other trademarks and trade names are those of their respective owners.

FCC:

FCC ID: 2ABFG-YRD420-F

IC ID: 11626A-YRD420-F

Class B Equipment

This equipment has been tested and found to comply with the limits for a Class B digital device, pursuant to Part 15 of the FCC Rules. These limits are designed to provide reasonable protection against harmful interference in a residential installation. This equipment generates, uses, and can radiate radio frequency energy and, if not installed and used in accordance with the instructions, may cause harmful interference to radio communications. However, there is no guarantee that interference will not occur in a particular installation. If this equipment does cause harmful interference to radio or television reception, which can be determined by turning the equipment off and on, the user is encouraged to try to correct the interference by one or more of the following measures:

- Reorient or relocate the receiving antenna.
- Increase the separation between the equipment and receiver.
- Connect the equipment into an outlet on a circuit different from that to which the receiver is connected.
- Consult the dealer or an experienced radio/TV technician for help.

Warning:

Changes or modifications to this device, not expressly approved by **Yale Home** could void the user's authority to operate the equipment.

Industry Canada:

FCC ID: 2ABFG-YRD420-F
IC ID: 11626A-YRD420-F
This Class A digital apparatus meets all requirements of the Canadian Interference Causing Equipment Regulations.

Yale Home

24/7 Support: 1-855-213-5841 • US.YaleHome.com

Yale® and Assure Lock® 2 are registered trademarks of Yale Home. Other products' brand names may be trademarks or registered trademarks of their respective owners and are mentioned for reference purposes only. ©Copyright 2023. All rights reserved. Reproduction in whole or in part without the express written permission of Yale Home is prohibited.

Trusted Every Day

P/N YRD420-KD-F Rev A

ASSA ABLOY

The global leader in door opening solutions

Yale Locks

Z-Wave Plus ™ v2 System Integrators Guide

Yale Assure Electronic Connected Biometric Deadbolts

Document Revision: 1.0

June 2023

Contents

Revision History 4
Yale Z-Wave Plus ™ Product Info 5
Network Operations 5
Enroll/Add device to network (SmartStart) 5
Enroll/Add device to network (Classic Inclusion Mode) for Assure Lock [YRC/D216/226/256/622/642/652, NF-YRC/D612/622] ..... **Error! Bookmark not defined.**
Enroll/Add device to network (Classic Inclusion Mode) for Assure 2 Lock [YRD410/420/430/450] 6
Un-enroll/Remove device from network (Exclusion Mode) 6
Factory Reset 6
Supported Command Classes 7
Command Class Z-Wave Plus ™ Info, Version 2 7
Command Class Manufacturer Specific, Version 2* 8
Command Class Security, Version 1 8
Command Class Security 2, Version 1 8
Command Class Device Reset Locally, Version 1* 9
Command Class Power Level, Version 1* 9
Command Class Version, Version 3* 10
Command Class Battery, Version 1* 11
Command Class Door Lock, Version 4* 11
Command Class Door Lock Logging, Version 1* 11
Command Class Schedule Entry Lock, Version 3* 11
Command Class User Code, Version 2* 12
Command Class Time Parameters, Version 1* 15
Command Class Time, Version 2 15
Command Class Firmware Update Meta Data, Version 5* 16
Command Class Association, Version 2* 17
Command Class Multi Channel Association, Version 3* 17
Command Class Association Group Info, Version 3* 18
Command Class Notification, Version 8* 20

Command Class Configuration, Version 4* 25
Command Class Application Status, Version 1 28
Command Class Transport Service, Version 2 28
Command Class Supervision, Version 1 28
Command Class Indicator, Version 3* 28
Command Class Basic, Version 2* 29

* This command class requires security.

Revision History

Rev.	Details
1.0	Initial Release

Yale Z-Wave Plus ™ Product Info

Manufacturer ID: ASSA ABLOY (0x0129)

Z-Wave™ Device Type: Door Lock Keypad

Z-Wave™ Role Type: Listening Sleeping Slave (LSS)

Network Operations

Enroll/Add device to network (SmartStart)

SmartStart enabled products can be added into a Z-Wave™ network by scanning the Z-Wave™ QR Code present on the product with a controller providing SmartStart inclusion. No further action is required and the SmartStart product will be added automatically within 10 minutes of being switched on in the network vicinity.

- Open the Z-Wave™ system's smart home app via smartphone or tablet and follow the in-app prompts to add a new device.
- SmartStart works when the Z-Wave™ system has the DSK saved and one of the following are true:
    - The lock has the minimum Radio Module firmware version AND is in a factory-reset state:
        - AYR-MOD-ZW3-USA: v2.40
    - The lock has the minimum Lock firmware version AND is in a factory-reset state:
        - YRD410/420/430/450-F: v1.3.10
    - An internal key has already been established.

Enroll/Add device to network (Classic Inclusion Mode) for Assure 2 Lock

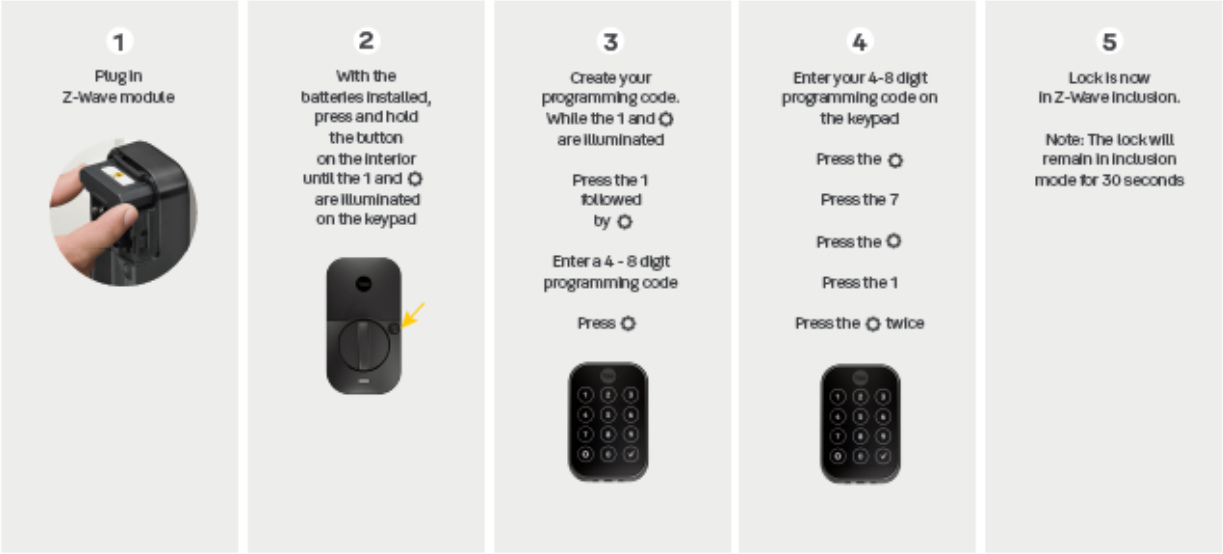

Un-enroll/Remove device from network (Exclusion Mode)

- Enter the 4–8-digit Master PIN code followed by the key.
- Press the 7 key followed by the key.
- Press the 3 key followed by the key.

When the Yale lock is unenrolled/excluded from the network through the device menu mode, any changes previously made to the user code database and configuration settings will be retained, as opposed to set back to defaults.

Factory Reset

- Factory resetting the lock with the Z-Wave™ module installed will clear the Z-Wave™ network settings, causing the device to be removed from the network.
- The following is the method of performing a factory reset:
    1. Manual factory reset, via power cycle while holding button on inside lock escutcheon.
        - See the Lock Installation Manual for details.
        - Please use the manual factory reset procedure only when the network primary controller is missing or otherwise inoperable.

Supported Command Classes

The Yale Assure Z-Wave Plus ™ deadbolts follow the Z-Wave™ Command Class Specifications for all command classes that are implemented. Please refer to these specifications for specifics on how each command class works. The supported command classes are listed below, and certain sections contain details about operations that may be specific to the Yale lock. If a section is blank, then please refer to the Z-Wave™ specifications.

As a secure device, most of the command classes supported by the lock are required to be sent securely with Z-Wave™ security. During enrollment, the controller can use the Security Command Class to get this list directly from the lock. If a command class requires security, it is also indicated as such below.

Specification used: Z-Wave™ Specifications Release Dec 2021 BCD

Command Class Z-Wave Plus ™ Info, Version 2

The Z-Wave Plus ™Info command class reports the following information:

- Role Type: Slave Sleeping Listening (0x07)
- Node Type: Z-Wave Plus ™ Node (0x00)
- Installer Icon Type: 0x0300
- User Icon Type: 0x0300

Command Class Manufacturer Specific, Version 2*

* This command class requires security.

The Manufacturer Specific command class reports the following information:

- Manufacturer ID: 0x0129
  - This is the manufacturer ID assigned to ASSA ABLOY.
- Product ID:
  - The Product ID can be used to differentiate between hardware platforms, as well as between ZW2 and ZW3. See Table 1 - First 2 Digits of Product ID, below, for details.
  - Product IDs for the locks covered in this document are as follows:
    - 0x49D1 for YRD410-F-ZW3 (2nd Generation Assure Keyed Push Button Biometric Deadbolt)
    - 0x49D2 for YRD420-F-ZW3 (2nd Generation Assure Keyed Touch Screen Biometric Deadbolt)
    - 0x49D3 for YRD430-F-ZW3 (2nd Generation Assure Keyless Push Button Biometric Deadbolt)
    - 0x49D5 for YRD450-F-ZW3 (2nd Generation Assure Keyless Touch Screen Biometric Deadbolt)

- Product Type ID:
  - 0x8107 for YRD410-F-ZW3, YRD420-F-ZW3, YRD430-F-ZW3 & YRD450-F-ZW3, (2nd Generation Assure Biometric Deadbolt)

Table 1 - First 2 Digits of Product ID

	Z-Wave™ Type			**Platform**					**Hex Value**
[0x8107]-ZW2	0	0	0	0	0	1	1	1	***0x07***
[0x8107]-ZW3	0	1	0	0	0	1	1	1	***0x49***

Command Class Security, Version 1

This command class has been implemented per the Z-Wave™ Specification.

Command Class Security 2, Version 1

This command class has been implemented per the Z-Wave™ Specification.

Command Class Device Reset Locally, Version 1*

* This command class requires security.

The Yale door locks covered in this guide can be reset to their factory default settings by manually resetting the lock or by BLE command via app for BLE locks (by following the procedure outlined in the specific lock's manual).

Upon factory reset, all Z-Wave™ network settings are cleared, all the user codes are erased from the lock (including the master code), and all configurable settings are reset to default values, except for the language setting. A factory reset leaves the lock in a completely unsecure state (waiting for master code to be set), so care should be taken if using the configuration parameter to perform a remote reset. However, if the DUT is unenrolled/excluded from the network through the device menu mode, then the user code database and configuration settings will not be reset to the defaults.

Command Class Power Level, Version 1*

* This command class requires security.

This command class has been implemented per the Z-Wave™ Specification.

The Power Level command class was implemented to allow controllers to set the transmit power for the door lock. This could be useful in large networks with many nodes, so that the lock can find working routes back to the controller while transmitting at a lower power. This ensures robust routes when the normal transmit power level is restored.

Currently there is no way to initiate a low power enrollment; this command class can only be used once the lock is enrolled successfully.

Command Class Version, Version 3*

* This command class requires security.

The Yale Real Living locks are a multi-processor system with 1 additional firmware target. All processors can be updated through the Firmware Update Meta Data command class. The firmware targets are numbered as follows:

- Firmware Target 0 = Z-Wave™ Chip
- Firmware Target 1 = Lock Processor

To identify the firmware version for each target, the hex data in the firmware version report must be converted to decimal prior to combining major and minor version into the full version.

After a controller sends a Version Get command the log will display the Version Report similar to the below:

```
Send VERSION_GET to node 16 started
Send VERSION_GET to node 16 completed in 00:00:01.242
Rx [S2_ACCESS] VERSION_REPORT(86 12) + 03 07 10 02 22 02 01 2C 00
```

The above Version Report will be defined as this in the Z-Wave™ sniffer tool, Zniffer:

```
Command Class Version ver.3
Version Report
    Z-Wave Library Type:          0x03
    Z-Wave Protocol Version:      0x07
    Z-Wave Protocol Sub Version:  0x10
    Firmware 0 Version:           0x02
    Firmware 0 Sub Version:       0x22
    Hardware Version:             0x02
    Number of firmware targets:   0x01
  ▾ vg 1:                         2C 00
      Firmware Version:             0x2C
      Firmware Sub Version:         0x00
```

For Firmware Target 0, the Firmware 0 Version (0x02) and Sub version (0x22) translate to module firmware decimal value of “2.34”.

For Firmware Target 1 (the data under vg1), Firmware Version (0x2C) and Sub version (0x00) translate to lock firmware decimal value of “4.3.00”.

Command Class Battery, Version 1*

* This command class requires security.

Per the Z-Wave Plus ™ Specification, the lock will send a Battery Report with a value of 0xFF to the Lifeline node when a critical battery level is reached (starting at about 4.2V for Product Type ID 0x8107). In addition, the Yale Locks provide 2 earlier low battery alarms through the notification command class (see Table 7 - Notification Table).

Low battery alarms will be generated if the lock is in a low battery state during one of the following events: any motor activation (keypad lock/unlock, RF lock/unlock, etc.), controller sends Get Battery command, or the unsolicited battery report was triggered. Yale locks will generate an unsolicited Battery Report at lock boot-up and every 8 hours if a node is listed in the Lifeline Group.

Command Class Door Lock, Version 4*

* This command class requires security.

Yale Z-Wave Plus ™ locks support three door lock modes: Door Secured (0xFF), Door Unsecured (0x00), and Door Unsecured with timeout (0x01). When Auto Relock is enabled, the lock will automatically relock after all unlock events. Yale Z-Wave Plus ™ locks do not support any of the "Door Unsecured for outside Door Handles" (0x20, 0x21) or "Door Unsecured for inside Door Handles" (0x10, 0x11) modes.

Command Class Door Lock Logging, Version 1*

* This command class requires security.

This command class has been implemented per the Z-Wave™ Specification.

Command Class Schedule Entry Lock, Version 3*

* This command class requires security.

Yale locks support Year Day Schedule types and Daily Repeating Schedule types. Yale locks allow the controller to apply multiple schedules to a single user. Each user has 1 Year Day Schedule slot (Slot ID 1) and 7 Daily Repeating slots (Slot IDs 1 – 7). If user scheduling is used in the lock, then the controller **MUST** set the lock's time using the Time Parameters command class.

Command Class User Code, Version 2*

* This command class requires security.

Versions 1 and 2 of this command class can address user code slots 1 through 250 via the User Code Set/Get/Report commands. Version 2 of this command class also includes extended versions of each of these commands, used to address the extended range of users.

Table 2 – Expected Reports for Set/Get Commands

Command	Slots 1-250	Slot 251	Slots 252-254	Slot 255	Slots 256-500
User Code CC v1/v2: User Code Get	User Code Report	User Code Report	User Code Report	User Code Report	N/A
User Code CC v1/v2: User Code Set	User Code Report	Master Code Report	User Code Report	User Code Report	N/A
User Code CC v2: Extended User Code Get	Extended User Code Report	Extended User Code Report	Extended User Code Report	Extended User Code Report	Extended User Code Report
User Code CC v2: Extended User Code Set	Extended User Code Report	Extended User Code Report	Extended User Code Report	Extended User Code Report	Extended User Code Report

The master code can be accessed (read/write) using slot 251 (0xFB), if using version 1 of this command class. For version 2, the Master Code Set/Get/Report commands must be used.

Yale locks do not support bulk commands (setting or getting multiple user codes at once) or CRC functionality for this command class.

It should be noted that the lock's operation mode (called "User Code Keypad Mode" in this command class) can be modified through Version 2 of this command class, or through parameter 8 of the Configuration command class. This is the only parameter that can be modified through more than one command class.

The following implementation notes apply specifically to non-access user codes:

- The usage of non-access users has changed slightly with ZW3, compared to ZW2, but is still backwards compatible. If a User Code Set is transmitted using version 1 of the command class, then the lock will accept a value of 0x04 as the status for the non-access user.
- Previously, a value of 0x04 was reserved for setting non-Access users, as stated above. When using version 2 of this command class, a non-Access

(now called "Messaging") user ID status is assigned a value of 0x03. This value of 0x03 should be used with the Extended User Code Set command.

- A non-access user can be identical to a "normal" PIN code, aside from the fact that it does *not* grant access.
- Any available user code slot (except the master code) can be used to store non-access user code.
- Schedules can be applied to non-access users.

Yale locks support the following User ID Status values:

Table 3 - User ID Status User Code CC v1 vs v2

User ID Status	**User Code CC v1 Set**	**User Code CC v1 Report Value**
Description	*Value*	*Value*
Available	0x00	0x00
Enabled / Grant Access	0x01	0x01
Disabled	0x02	0x03
	0x03	
Messaging: The user code is accepted, but the lock does not grant access to the user. Instead, it generates an alarm to the Lifeline and does NOT take preventative actions for further attempts to enter the User ID and/or User Code.	0x04	0x04
One-Time Use: This PIN is disabled immediately after being used for a successful unlock operation.	0x06	0x06
Expiring: This PIN is disabled once a specified amount of time has passed after being used for a successful unlock operation. The expiration time is set through the Configuration command class.	0x07	0x07

User ID Status	User Code CC v2: Extended User Code Set	User Code CC v2: Extended User Code Report Value
Description	*Value*	*Value*
Available	0x00	0x00
Enabled / Grant Access	0x01	0x01
Disabled	0x02	0x02
Messaging: The user code is accepted, but the lock does not grant access to the user. Instead, it generates an alarm to the Lifeline and does NOT take preventative actions for further attempts to enter the User ID and/or User Code.	0x03	0x03
One-Time Use: This PIN is disabled immediately after being used for a successful unlock operation.	0x06	0x06
Expiring: This PIN is disabled once a specified amount of time has passed after being used for a successful unlock operation. The expiration time is set through the Configuration command class.	0x07	0x07

Command Class Time Parameters, Version 1*

* This command class requires security.

The controller must set the Time Parameters in the lock anytime the lock loses power. After 10 seconds from lock enrollment, if there are no messages from the controller the lock will initially request the Time (by sending Time Get and Time Parameter Get commands). If the time is not set by the controller, then user codes with schedules applied to them cannot be granted access. When the lock is powered up, it will generate a Notification Report to indicate to the controller that power has been applied (Alarm V1 Type = 0x82, Alarm V1 Level = 0x00, Event Type = 0x08, Event Value = 0x01). This indicates to the controller that the lock no longer has a valid time set.

If the controller does not support either the Time CC or Time Parameters CC, then scheduled users will not have access.

Command Class Time, Version 2

The controller must set the Time Parameters in the lock anytime the lock loses power. Even though the Time CC is not secure, the Time Set command must be issued at the same or higher security level as when the device was enrolled for time to be set otherwise it will be rejected by the device. After 10 seconds from lock enrollment, if there are no messages from the controller the lock will initially request the Time (by sending Time Get and Time Parameter Get commands). If the time is not set by the controller, then user codes with schedules applied to them cannot be granted access. When the lock is powered up, it will generate a Notification Report to indicate to the controller that power has been applied (Alarm V1 Type = 0x82, Alarm V1 Level = 0x00, Event Type = 0x08, Event Value = 0x01). This indicates to the controller that the lock no longer has a valid time set.

If the controller does not support either the Time CC or Time Parameters CC, then scheduled users will not have access.

A time sync should occur every 8 hours, starting with the Time CC. If there is no response within a minute, the next step is to issue a Time Parameters Get to sync time.

Command Class Firmware Update Meta Data, Version 5*

* This command class requires security.

Yale Z-Wave Plus ™ locks support over-the-air (OTA) upgrading of 2 firmware targets:

1. Firmware Target 0: Z-Wave™ chip
2. Firmware Target 1: The lock main processor

Firmware Target 0 is used to determine the correct Z-Wave™ processor image to download. ID 1 is always 0xA5, to signal this is an ASSA ABLOY Z-Wave™ image, and ID 2 is specific to the region, with the lower nibble being 0x0 and the upper nibble being the value in Table 4 - Region-Specific Values for Firmware ID 0. Eventually the lower nibble will be used to separate builds within a specific region, but this will also be 0 for now, since there is only a single build of firmware.

Table 4 - Region-Specific Values for Firmware ID 0 (Upper Nibble)

Region	Value
ANZ	0x1
CN	0x2
EU	0x3
HK	0x4
IL	0x5
IN	0x6
JP	0x7
KR	0x8
RU	0x9
US	0xA

Firmware 1 target will depend on which version of the lock is in use (mapped to the Product Type ID).

- For YRD410-F-ZW3, YRD420-F-ZW3, YRD430-F-ZW3 & YRD450-F-ZW3 (2nd Generation Assure Biometric Deadbolt), Firmware 1 ID = 0x8107

After an OTA is performed (a Firmware Update Status Report should return with successful), there is an additional step internally where we write/apply the image to the lock/module. When the image is being applied to the lock, the lock is unresponsive until completion of the applied image. Once the completion of the OTA image is applied the lock silently reboots.

The following is the time it takes for each product to complete OTA image apply phase:

- For Z-Wave™ Radio Chip, ~10 seconds
- For YRD410-F-ZW3, YRD420-F-ZW3, YRD430-F-ZW3 & YRD450-F-ZW3 (2nd Generation Assure Biometric Deadbolt), ~23 minutes (full image) ~5 minutes (patch/differential image)

Command Class Association, Version 2*

* This command class requires security.

This command class has been implemented per the Z-Wave™ Specification.

Command Class Multi Channel Association, Version 3*

* This command class requires security.

This command class has been implemented per the Z-Wave™ Specification.

Yale locks support only one group, which can contain up to 5 nodes.

Command Class Association Group Info, Version 3*

* Command Class Requires Security

Yale locks support the Lifeline Association Group.

Table 5 - Association Table

Group ID	Maximum Nodes	Description	Commands

1	5	Lifeline	• Command Class Battery
			  ○ Battery Report
			• Command Class Configuration
			  ○ Configuration Report
			• Command Class Notification
			  ○ Notification Report
			• Command Class Door Lock
			  ○ Door Lock Operation Report
			  ○ Door Lock Configuration Report
			• Command Class Device Reset Locally
			  ○ Device Reset Locally Notification
			• Command Class User Code
			  ○ User Code Report
			  ○ Extended User Code Report
			  ○ User Code Keypad Mode Report
			  ○ Master Code Report

The following are the actions to trigger the reports:

Table 6 – Lifeline Report Trigger Table

Report Command	**RF Trigger**	**Manual Trigger**
Battery Report	Any RF Lock Operation when lock is under the battery thresholds	Any manual/keypad Lock Operation when lock is under the battery thresholds or Power Cycle Lock
Configuration Report	Configuration Set	Change Lock Settings via Keypad
Notification Report (Access Control)	Any RF Lock Operation	Manual or Keypad Unlock/Lock
Notification Report (Power Management)	Any RF Lock Operation when lock is under the battery thresholds	Any manual/keypad Lock Operation when lock is under the battery thresholds or Power Cycle Lock
Door Lock Operation Report		Manual or Keypad Unlock/Lock
Door Lock Configuration Report	Door Lock Configuration Set	Enable/Disable Auto-Relock Feature via Keypad
Device Reset Locally Notification		HW Factory Reset
User Code Report	Add/Delete User Code via User Code Set Command	Add/Delete User Code via Keypad from Slots 1-250
Extended User Code Report	Add/Delete User Code via Extended User Code Set Command	Add/Delete User Code via Keypad from Slots 251-500
User Code Keypad Mode Report	User Code Keypad Mode Set	Enable/Disable Vacation Mode or Privacy Mode (refer to Installation Manual)
Master Code Report	Master Code Set	Update/Modify Master Code via Keypad

Command Class Notification, Version 8*

* This command class requires security.

Table 7 - Notification Table

Alarm Reports	Alarm type	Alarm Level	Description	Notification Type	Event
Deadbolt Jammed	0x09	0x01	Deadbolt jammed while locking	0x06	0x0B
		0x02	Deadbolt jammed while unlocking	0x06	0x0B
Keypad Lock	0x12	0x (01 - max users)	Where Alarm level represents user slot number	0x06	0x05
Keypad Unlock	0x13	0x (01-max users)	Where Alarm level represents user slot number (0x00 = Master Code)	0x06	0X06
Manual Lock	0x15	0x01	by key cylinder or inside thumb-turn	0x06	0x01
		0x02	by touch function (lock and leave)	0x06	0x01
		0x03	By inside button	0x06	0x01

Manual Unlock	0x16	0x01	By key cylinder or inside thumb turn	0x06	0x02
		0x02	By inside button	0x06	0x02
RF Operate Lock	0x18	0x01	by RF module	0x06	0x03
RF Operate Unlock	0x19	0x01	by RF module	0x06	0X04
Auto Lock Operate Locked	0x1B	0x01	Auto re-lock cycle complete, locked.	0x06	0x09
User deleted	0x21	0x (01-max users)	User was deleted. Alarm level = user slot number	0x06	0X0D (single)
		0x00 [1]	All User codes were deleted		0X0C (all)
Non-Access	0x26	0x (01-max users)	A Non-Access Code was entered at the lock. Where alarm level represents user slot number	0x06	0xFE
Door State / DoorSense™ [2]	0x2B	0x00	Door is open	0x06	0x16
		0x01	Door is closed	0x06	0x17
		0x02	Door Propped (Door Open for longer than configurable door propped time)	0x06	0xFE

Daily Repeating Schedule Set/Erased	0x60	0x (01-max users)	Schedule(s) has been set/erased for specified user ID	0x06	0xFE
Daily Repeating Schedule Enabled/Disabled	0x61	0x (01-max users)	Daily Repeating Schedule(s) were enabled/disabled for User ID specified in Alarm Level. If Alarm Level = 0xFF then all users were affected.	0x06	0xFE
Year Day Schedule Set/Erased	0x62	0x (01-max users)	Schedule(s) has been set/erased for specified user ID	0x06	0xFE
Year Day Schedule Enabled/Disabled	0x63	0x (01-max users)	Year Day Schedule(s) were Enabled/Disabled for User ID specified in Alarm Level. If Alarm Level = 0xFF then all users were affected.	0x06	0xFE
All Schedule Types Erased	0x64	0x (01-max users)	All Schedule Types were Set (erased/set) for User ID specified in Alarm Level. If Alarm Level = 0xFF then all users were affected.	0x06	0xFE
All Schedule Types Enabled/Disabled	0x65	0x (01-max users)	Schedule(s) has been enable/disabled for specified user ID. If Alarm Level = 0xFF then all users were affected.	0x06	0xFE
Master Code changed	0x70	0x00	Master code was changed at keypad or via RF	0x06	0x12
User added		0x (01-max users)	User added. Alarm level = user slot number	0x06	0X0E
Duplicate Pin code error	0x71	0x (01-max users)	Where Alarm level represents user slot Number, an Alarm is generated in response to add user via RF. This alarm is not generated when attempting to add duplicate pin at the Keypad (The lock simply denies it and plays the “Denied” sound.) Trying to duplicate the master code will result in a 0x71 0x00 alarm report.	0x06	0x0F

Battery is fully charged	0x80	0x05	After a low battery alert was observed, the lock was powered down and powered back up with full battery.	0x08	0x0D
Handing Cycle completed	0x81	0x00	Right-handed install	0x06	0xFE
		0x01	Left-handed install	0x06	0xFE
Door Lock needs Time set / RF Module Power Cycled	0x82	0x00	Power to the lock was restored and the locks RTC was cleared. The controller should set the time to ensure proper logging.	0x08	0x01
Disabled user entered at keypad	0x83	0x (01-max users)	A disabled user pin code was entered at the keypad	0x06	0xFE
Valid user but outside of schedule	0x84	0x (01-max users)	A valid user can be both a normal user and a non-Access user. If a non-access user is out of schedule this alarm will be sent instead of the non-access alarm.	0x06	0xFE
Fingerprint Unlock	0x91	0x(01- Max Fingerprint Slot)	User credentials unlock (credential type: 0x02). Alarm Level represents Fingerprint Slot number.	0x06	0X06
Fingerprint Lock	0x92	0x(01- Max Fingerprint Slot)	User credentials lock (credential type: 0x02). Alarm Level represents Fingerprint Slot number.	0x06	0X05
Tamper Alarm	0xA1	0x01	keypad attempts exceed code entry limit	0x06	0X10
		0x02	front escutcheon removed from main	0x06	0xFE
Low Battery Alarms [3]	0xA7	0x (Current %)	*Low Battery* Starting at 4.6V	0x08	0x0A
	0xA8	0x (Current %)	*Critical Battery Level* Starting at 4.4V	0x08	0x0B
Integrated BLE Lock [4]	0xE2	0x00	Integrated BLE Lock	0x06	0x03
		0x01	Integrated BLE Auto Relock	0x06	0x09
Integrated BLE Unlock [4]	0xE3	0x00	Integrated BLE Unlock	0x06	0X04
		0x01	Integrated BLE Auto Unlock	0x06	0X04

Homekit BLE Lock [4]	0xE4	0x00	Integrated Homekit BLE Lock	0x06	0x03
Homekit BLE Unlock [4]	0xE5	0x00	Integrated Homekit BLE Unlock	0x06	0X04

[1] Deleting all user codes will also delete any associated schedules (year day and daily repeating scheduled pin codes) assigned to user codes.
[2] This requires additional Hardware and calibration within the Yale Access App.
[3] The Yale lock also supports a 3rd low battery alarm: too low to operate. This alarm is sent out as a Battery Report (with value = 0xFF) through the Battery Command Class. This is the last low battery alarm level before the product stops functioning. Starting at 4.2V
[4] Needs Yale Access App setup.

Command Class Configuration, Version 4*

* This command class requires security.

Table 8 - Configurable Parameters

Param. Num.	Name	Length	Configuration Properties			Info	Length of Info String
			Min	Max	Default		(Max length allowed is 90)
1	Volume	1 byte	0x01 (High Volume)	0x03 (Silent)	0x01 (High Volume)	Set Volume Level to high (1), low (2), or silent (3).	53
2	Auto Relock	1 byte	0x00 (Disable)	0xFF (Enable)	0x00 (Disable)	Set Auto Relock feature to enable or disable.	45
3	Relock time	1 byte	0x01 (1 seconds) [1]	0xB4 (180 seconds)	0x1E (30 seconds)	Adjust the time your lock will auto relock.	43
4	Wrong Code Entry Limit	1 byte	0x03	0x0A	0x03	Adjust the limit for wrong code entries allowed by your lock.	61

7	Shut down time	1 byte	0x0A (10 seconds)	0x84 (132 seconds)	0x3C (60 seconds)	Adjust the time your lock is shutdown after reaching its wrong code entry limit.	80
8	Operating mode[2]	1 byte	0x00 (Normal Mode)	0x03 (Passage Mode)	0x00 (Normal Mode)	Set the Operating Mode to normal mode, keypad disable mode or passage mode.	76
11	One Touch Locking	1 byte	0x00 (Disable)	0xFF (Enable)	0xFF (Enable)	Set One Touch Locking feature to enable or disable.	51
13	Lock Status LED	1 byte	0x00 (Disable)	0xFF (Enable)	0x00 (Disable)	Set Lock Status LED feature to enable or disable.	49
18	Door Propped Timer [3]	1 byte	0x00 (Disable) [4]	0xFE (2540 seconds) [4]	0x00 (Disable) [4]	Adjust the time to receive an alert when the door is propped open.	66
19	DPS Alarms (DoorSense™) [3]	1 byte	0x00 (Disable)	0xFF (Enable)	0xFF (Enable)	Enable or Disable DPS Alarms	28

28	Expiring Pin Code Enabled Time	1 byte	0x00 (Disable)	0xFF (127 Hours)	0x00 (Disable)	Timeout value used to determine time after first entry is triggered.	68

[1] Even though the lock accepts value 0x01 for Auto Relock Time, we limit the lock's minimum to value of 0x03. Therefore, if user tries to set Auto Relock Time to values 0x01 or 0x02, it will always report back value of 0x03.
[2] When Operation Mode feature is set to Passage Mode, this also results in disabling the following configuration parameters 2 (Auto Relock feature). The Passage Mode feature can only be set when the user holds the inside button.
[3] This requires additional Hardware and calibration within the Yale Access App.
[4] The Door Propped value is represented as seconds X 10. (i.e., a value of 4 would mean a door propped timer of 40 seconds).

Command Class Application Status, Version 1

This command class has been implemented per the Z-Wave™ Specification.

Command Class Transport Service, Version 2

This command class has been implemented per the Z-Wave™ Specification.

Command Class Supervision, Version 1

This command class has been implemented per the Z-Wave™ Specification.

Command Class Indicator, Version 3*

* This command class requires security.

The indicator feature is set by using Indicator ID 0x50 to identify the node and Property ID 0x02 or 0x03, 0x04 and 0x05.

Table 9 – Lock UI for Indicator Set Overview

Indicator Set	Lock Exterior	Lock Interior
OFF	Keypad LED is OFF	Inside LED OFF
ON	Numbers 0-9 Flash	Inside LED Flashes

In order to set the Indicator ID 0x50 with Property 0x02, set values to 0x00 for off and 0x01…0x63 or 0xFF for on.

In order to properly set the Indicator ID 0x50 with Properties 0x03, 0x04 and 0x05, we had to map the values to our lock's specific blink rate.

Table 10 – Minimum Values for Indicator Set Property IDs 0x03, 0x04, & 0x05 to trigger Lock UI

Property ID 0x03 (On/Off Periods) Fixed Value	Property ID 0x04 (On/Off Cycles) Minimum Value	Property ID 0x05 (On time within an on/Off period) Fixed Value
0x14*	0x00...0xFF (per Z-Wave™ Spec)	0x0A*

**NOTE: If Property IDs 0x03 and 0x05 are set to value other than the above, then the lock will blink at the different number of cycles than what you have set. **

Command Class Basic, Version 2*

* This command class requires security.

This command class is mapped to Door Lock CC:

Table 11 – Basic Mapping Overview

Basic Command	Door Lock Mapped Command
Basic Set (Value)	Door Lock Operation Set (Door Lock Mode)
Basic Report (Current Value = 0x00)	Door Lock Operation Report (Door Lock Mode = 0x00)
Basic Report (Current Value = 0xFF)	Door Lock Operation Report (Door Lock Mode > 0x00)

The Basic Get Current Value, Basic Get Duration, and Basic Get Target Value are mapped to Door Lock Operation Get and Basic Set is directly mapped to Door Lock Operation Set where the Duration is returned as is, but the Value and Target Door Lock State Value of the Basic Report use the following mapping:

Table 12 – Basic Report: Value

Value	Level	State	Door Lock State
0 (0x00)	0%	Off	Unsecure
1..99 (0x01...0x63)	1..100%	On	Secure
100..253 (0x64...0xFD)	Reserved	Reserved	
254 (0xFE)	Unknown	Unknown	Unknown
255 (0xFF)	100%	On	Secure