Smart Module Installation

Yale Pro® 2 Wi-Fi

1

If your lock is already installed, remove the batteries.

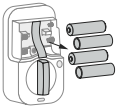

2

Insert the Smart Module into the battery compartment slot.

Reinsert the batteries.

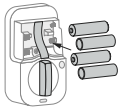

The Security 2 DSK label is on the side of the Smart Module that is facing outwards.

3

Open the Yale Access App and navigate to your lock model.

3a. Select 'Lock Settings'.

3b. Select 'Yale Smart Module'.

3c. Follow steps in the app to complete set-up.

4

To remove the Smart Module from your system, unenroll the smart module through the module settings under lock settings in the Yale Access App.

⚠ Anytime you add or remove a Smart Module from your lock, the batteries must be removed

Smart Module Installation

Yale Pro® 2 & Master Lock Connected Commercial

Z-Wave® Long Range, Zigbee®

1

If your lock is already installed, remove the batteries.

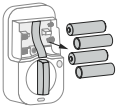

2

Insert the Smart Module into the battery compartment slot.

Reinsert the batteries.

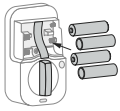

The Security 2 DSK label is on the side of the Smart Module that is facing outwards.

3

3a. Enter your locks master entry code, followed by the ✪

3b. Press the **7** key followed by the ✪

3c. Press the **1** key followed by the ✪

If you have SmartStart enabled with your Z-Wave® system, follow in-app prompts to add a new device. If you do not have SmartStart or are not sure, follow the steps below.

4

To remove the Smart Module from your system, open the smart home or alarm app and follow the instructions for removing a device.

4a. Enter your locks master entry code, followed by the ✪

4b. Press the **7** key followed by the ✪

4c. Press the **1** key followed by the ✪

⚠ Anytime you add or remove a Smart Module from your lock, the batteries must be removed

Changes or modifications to this device,
not expressly approved by MASTER LOCK Group
could void the user's authority to operate the equipment.

This device is a security enabled Z-Wave® Long Range product that is able to use encrypted Z-Wave® Long Range messages to communicate to other security enabled Z-Wave® Long Range products. This device must be used in conjunction with a Security Enabled Z-Wave® Controller in order to fully utilize all implemented functions. This product can be operated in any Z-Wave® network with other Z-Wave® certified devices
from other manufacturers. All non-battery operated nodes within the network will act as repeaters regardless of vendor to increase reliability of the network.

FCC: MZR-YRHCPZW4FM, MZR-YRHCPZB3FM

Model: AYR-MOD-ZW4-USA-MFH, AYR202-ZB3-USA-MFH

Class B Equipment
This equipment has been tested and found to comply with the limits for a Class B digital device, pursuant to Part 15 of the FCC Rules. These limits are designed to provide reasonable protection against harmful interference in a residential installation. This equipment generates, uses, and can radiate radio frequency energy and, if not installed and used in accordance with the instructions, may cause harmful interference to radio communications. However, there is no guarantee that interference will not occur in a particular installation. If this equipment does cause harmful Interference to radio or television reception, which can be determined by turning the equipment off and on, the user is encouraged to try to correct the interference by one or more of the following measures:

- Reorient or relocate the receiving antenna.
- Increase the separation between the equipment and receiver.
- Connect the equipment into an outlet on a circuit different from that to which the receiver is connected.
- Consult the dealer or an experienced radio/TV technician for help.

THIS DEVICE COMPLIES WITH PART 15 OF THE FCC RULES. OPERATION IS SUBJECT TO THE FOLLOWING TWO CONDITIONS. (1) THIS DEVICE MAY NOT CAUSE HARMFUL INTERFERENCE, AND (2) THIS DEVICE MUST ACCEPT ANY INTERFERENCE RECEIVED, INCLUDING INTERFERENCE THAT MAY CAUSE UNDESIRED OPERATION.

This equipment complies with the FCC radiation limits set forth for an uncontrolled environment. This equipment should be installed and operated with minimum distance 20cm between the radiator & your body. This transmitter must not be co-located or operating
in conjunction with any other antenna or transmitter.

Industry Canada: AYR-MOD-ZW4-USA-MFH, AYR202-ZB3-USA-MFH

IC: 2676A-YRHCPZB3FM, 2676A-YRHCPZW4FM

Under Industry Canada regulations,this radio transmitter may only operate using an antenna of a type and maximum (or lesser) gain approved for the transmitter by Industry Canada. To reduce potential radio interference to other users, the antenna type and its gain should be so chosen that the equivalent isotropically radiated power (e.i.r.p.) is not more than that necessary for successful communication.

En vertu des règlements d'Industrie Canada, cet émetteur radio ne peut fonctionner avec une antenne d'un type et un maximum (ou moins) approuvés pour gagner de l'émetteur par Industrie Canada. Pour réduire le risque d'interférence aux autres utilisateurs, le type d'antenne et son gain doivent être choisies de façon que la puissance isotrope rayonnée équivalente (PIRE) ne dépasse pas ce qui est nécessaire pour une communication réussie.

Section 7.1.3 of RSS-GEN This Device complies with Industry Canada

License-exempt RSS standard(sfollowing two conditions: 1) this device may not cause interference,). Operation is subject to the and 2) this device must accept any interference, including interference that may cause undesired operation of the device.

Cet appareil est conforme avec Industrie Canada RSS standard exemptes de licence(s). Son fonctionnement est soumis aux deux conditions suivantes: 1) ce dispositif ne peut causer des interférences, et 2) cet appareil doit accepter toute interférence, y compris les interférences qui peuvent causer un mauvais fonctionnement du dispositif.

This radio transmitter has been approved by Industry Canada to operate with the antenna types listed below with the maximum permissible gain indicated. Antenna types not included in this list, having a gain greater than the maximum gain indicated for that type, are strictly prohibited for use with this device.

Le présent émetteur radio a été approuvé par Industrie Canada pour fonctionner avec les types d'antenne énumérés ci-dessous et ayant un gain admissible maximal. Les types d'antenne non inclus dans cette liste, et dont le gain est supérieur au gain maximal indiqué, sont strictement interdits pour l'exploitation de l'émetteu
Any changes or modifications not expressly approved by manufacturer could void the user's authority to operate the equipment.

IMPORTANT!
Any changes or modifications not expressly approved by the party responsible for compliance could void the user's authority to operate this equipment.

CAN ICES-3B/NMB-3B

24/7 1-855-213-5841 Yale Home ShopYaleHome.com
24/7 866-760-1936 Master Lock MasterLock.com

Yale® is a registered trademarks of Master Lock Company LLC and its affiliates. Other products' brand names may be trademarks or registered trademarks of their respective owners and are mentioned for reference purposes only. © Copyright 2026. All rights reserved. Reproduction in whole or part without the express written permission of Master Lock Company LLC and its affiliates is prohibited.

Yale Pro® 2 Cylindrical Lock

YMB614/YMB624/YMB634/YMB644

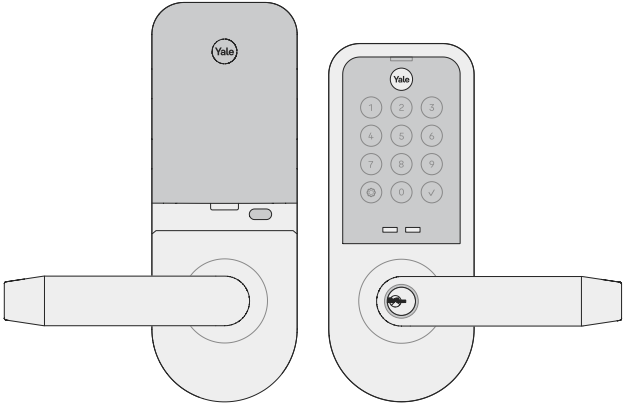

Install Your Lock

Follow the step-by-step Installation Guide in this manual (page 5-24).

Set Up, Program, and Use Your Lock

Follow the instructions in this manual (page 26-28), the Quick Start Guide, or the partner app to set up and program your lock. Create permanent entry codes, issue entry codes for guests, and more (page 25-38).

This page was left intentionally blank.

Contents

In the Box **4**

Installation and Setup Guide **5**

Determine Door Hand 6

Check Door Measurements 7

Make or Adjust Holes 8

Install Latch Bolt and Strike Plate 9

Disassemble Handle Assembly 10

Adjust Door Thickness 11

Assemble Exterior Assembly 12

Install Exterior Assembly 13

Install Bracket and Gasket 14

Change Handing for Interior Lock 15

Install Interior Mounting Hardware 16

Attach Wire Cable to Interior Lock 17

Install Interior Lock 18

Test Levers and Key 19

Install DoorSense (Optional) 20

Install Yale Smart Module (Optional) 23

Install Batteries and Initial Setup 24

Using Your Lock **25**

Create Programming Code 26

Configuring Your Lock 27

LED Alerts 29

Resetting Your Lock to Factory Defaults 30

Features 31

Lock Operations Troubleshooting 35

Hardware Troubleshooting 37

In the Box

Lock

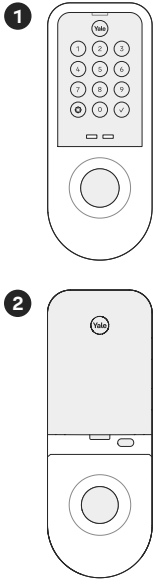

Hardware

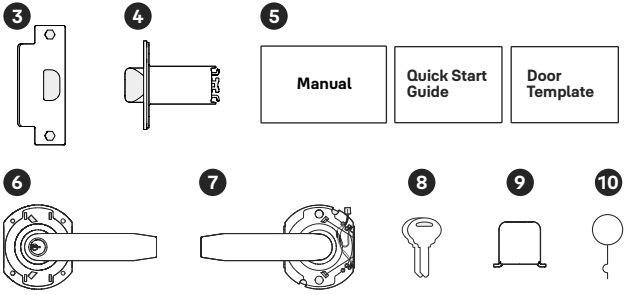

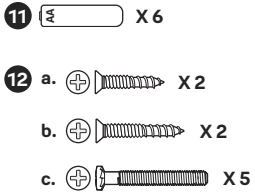

Add-Ons

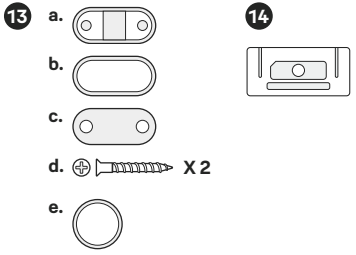

1. Exterior Keypad
2. Interior Lock
3. Strike Plate
4. Latch Bolt
5. Manual, Quick Start Guide, and Door Template
6. Exterior Handle Assembly
7. Interior Handle Assembly
8. Keys
9. Cap
10. Reset Pin
11. AA Batteries
12. Screws
    - **a.** Latch Bolt Screws
    - **b.** Strike Plate Screws
    - **c.** Mounting Screws
13. DoorSense
    - **a.** Housing
    - **b.** Cover
    - **c.** Mounting Tape
    - **d.** Screws
    - **e.** Flush Mount Cap
14. Smart Module (Included for Wi-Fi, Z-Wave, and Zigbee models)

Installation and Setup Guide

Required Tools

1

2

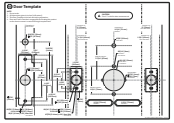

You Might Also Need

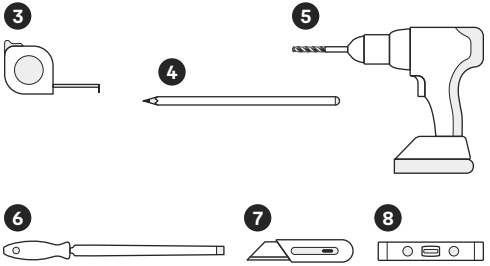

1. **Phillips Head Screwdriver**
2. **Door Template**
   (a separated page)
3. **Tape Measure**
4. **Pencil**
5. **Drill**
6. **Wood Mortise Chisel**
7. **Utility Knife**
8. **Level**

⚠ Failure to follow the Installation Guide precisely could result in damage to the product, voiding the factory warranty, and could lead to failure of the product to provide access.

1 Determine Door Hand

The hand of a door is determined from the secure side of the door. The "secure side" refers to the side from which you initially unlock and enter.

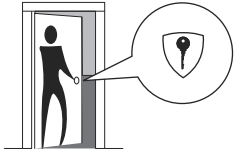

Left Hand "**LH**", Hinges Left. Open Inward.

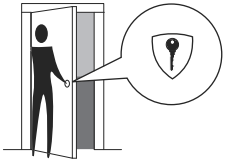

Left Hand Reverse "**LHR**", Hinges Left. Open Outward.

Right Hand "**RH**", Hinges Right. Open Inward.

Right Hand Reverse "**RHR**", Hinges Right. Open Outward.

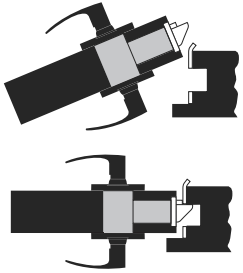

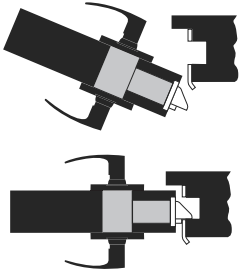

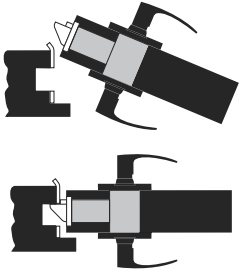

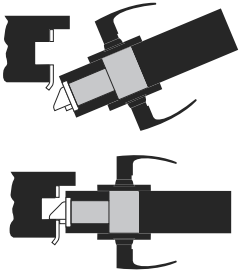

2a Check Door Measurements

If your door doesn't have holes, please proceed to step 2b. →

Use the **Door Template** and follow the guidelines to measure each aspect of your door and frame.

✎ If you need to make adjustments, find the closest match to each aspect of your door on the **Door Template** and follow **step 2b.** Please note that there are some cases when existing holes cannot be adjusted to be compatible.

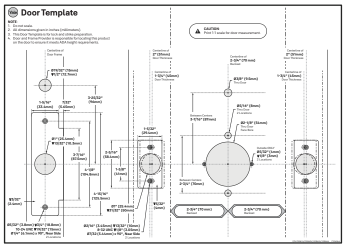

⚠ Please do not drill any holes until you confirm that your door is compatible.

If you have confirmed that the existing holes are compatible with your new lock, please proceed to step 3 (skip step 2b).

2b Make or Adjust Holes

If you have confirmed that the existing holes are compatible, proceed to step 3. →

1. Prepare your door:

1a. Tape the Door Template onto the door as shown.

1b. Check the door thickness. Follow the template to mark and drill the required holes.

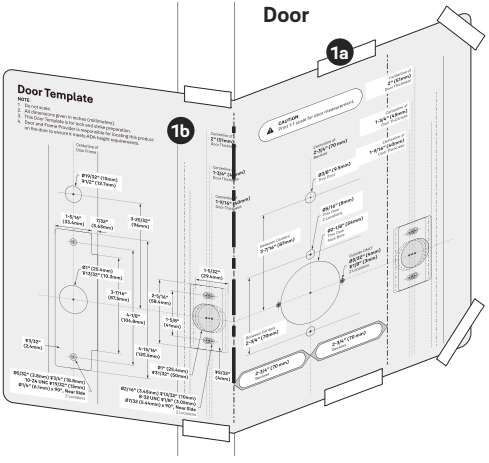

2. Prepare your door frame:

2a. Close the door from the inside. Insert a pencil through the edge bore to mark the center of the strike pocket on the door frame.

2b. On the door frame, center the strike plate hole on the pencil mark. Trace the outline of the strike plate with pencil.

2c. Chisel out the outlined area to the depth of the strike plate so it sits flush with your door frame. Follow the template to mark and drill the required holes.

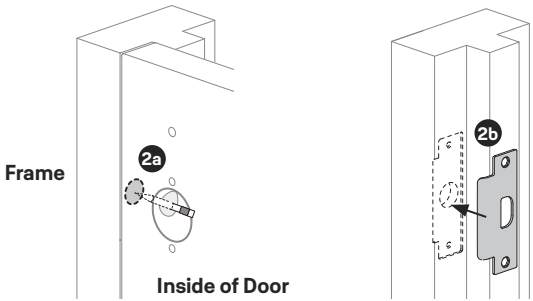

3 Install Latch Bolt and Strike Plate

1. Align the strike plate with the latch bolt.

Note: Curved edge of latch bolt faces direction door closes.

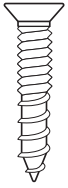

x 2 for Strike Plate
(Actual size)

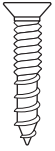

x 2 for Latch Bolt
(Actual size)

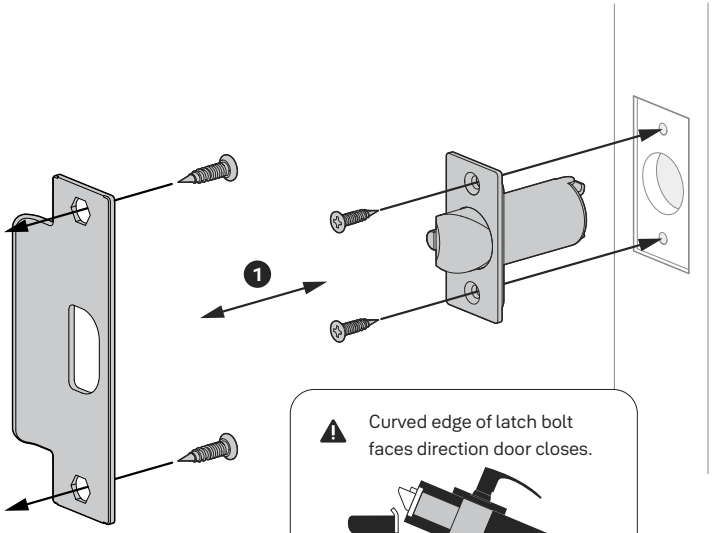

Curved edge of latch bolt faces direction door closes.

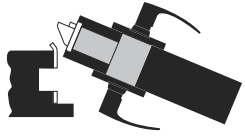

Install your lock with the door open.
Do not close your door until all the steps are completed.

4 Disassemble Handle Assembly

1. Insert the reset pin into the holes on the handles.

2. Pull the lever off the assembly.

3. Pull the lock body off the interior mounting hardware.

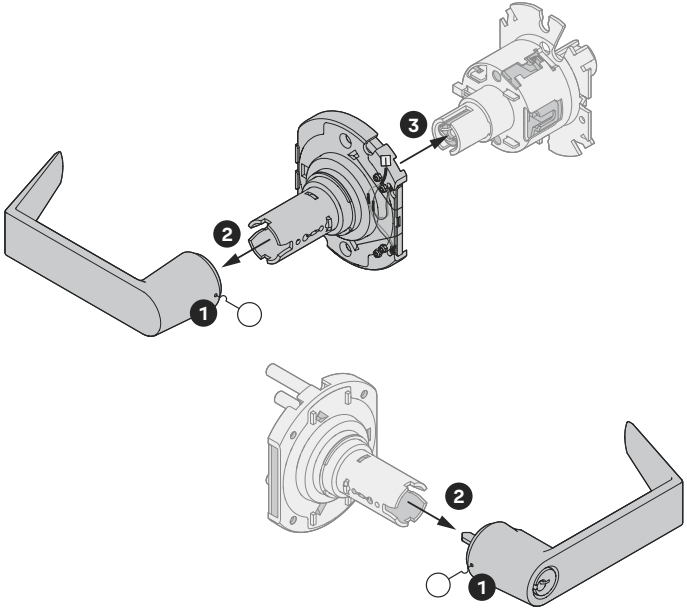

5 Adjust Door Thickness

1. Insert the reset pin into the designated hole of the rotating plate on the lock body.

2. Adjust the rotating plate on the lock body to the appropriate position based on your dock thickness.

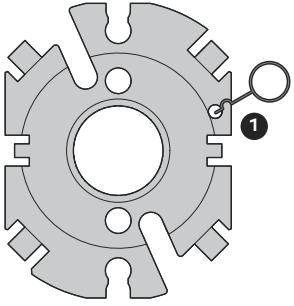

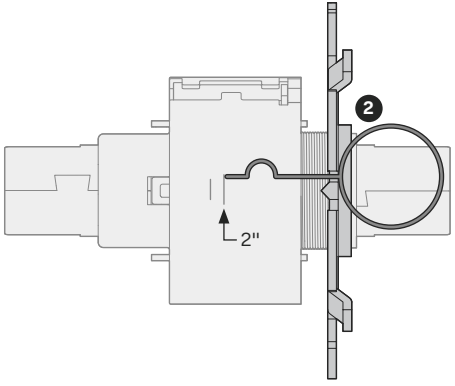

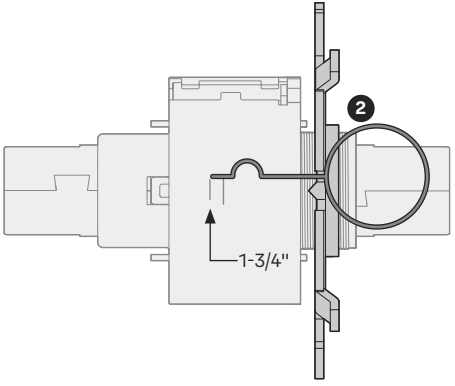

6a Assemble Exterior Assembly

1. Position exterior mounting hardware based on your door hand:
   a. Right-Hand Door: Ensure "**RH**" is pointed towards the "**RH/LH**" marking on the back of the keypad;
   b. Left-Hand Door: Ensure "**LH**" is pointed towards the "**RH/LH**" marking on the back of the keypad.

2. Assemble exterior lever, keypad and exterior mounting hardware together as shown.

3. Tighten the two screws to secure exterior mounting hardware to the keypad.

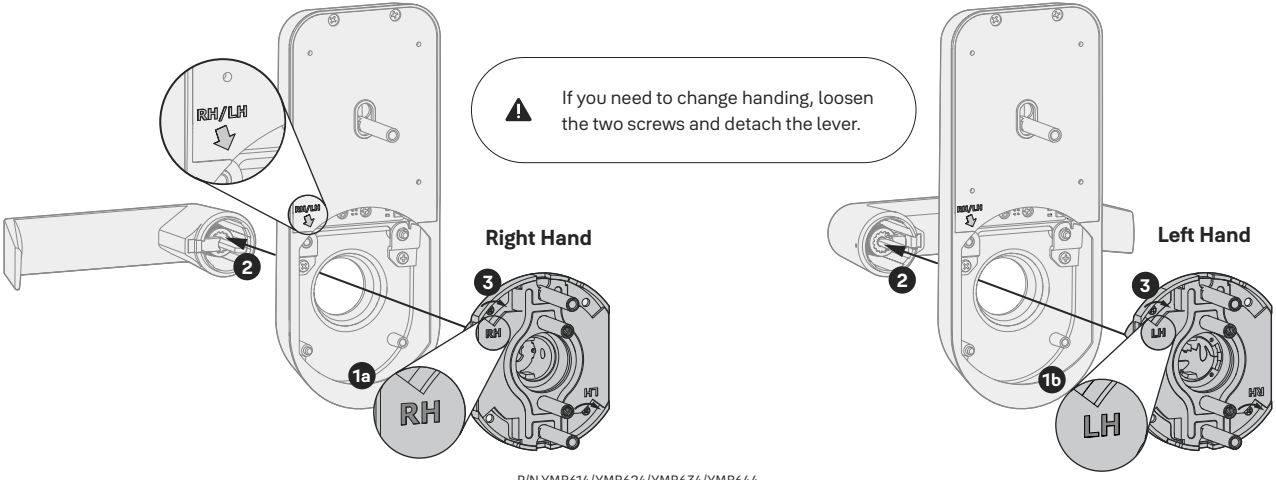

6b Install Exterior Assembly

1. Insert the cap into the lock body.
2. Position and orient the lock body so that its pocket faces the latch bolt.
3. Guide the screw posts of exterior assembly into the holes on the lock body.

   Note: Make sure the tailpiece slot in the lock body is in horizontal position.
4. Route the front wire through the channel in the lock body, then guide it through the face bore along with the motor wire on the lock body.
5. Insert the screw posts of the assembly into corresponding holes on your door.

⚠ The two moving "T" tabs must be fully captured in Retractor Pocket, and the Mounting Flanges must be in Mounting Flange Pockets.

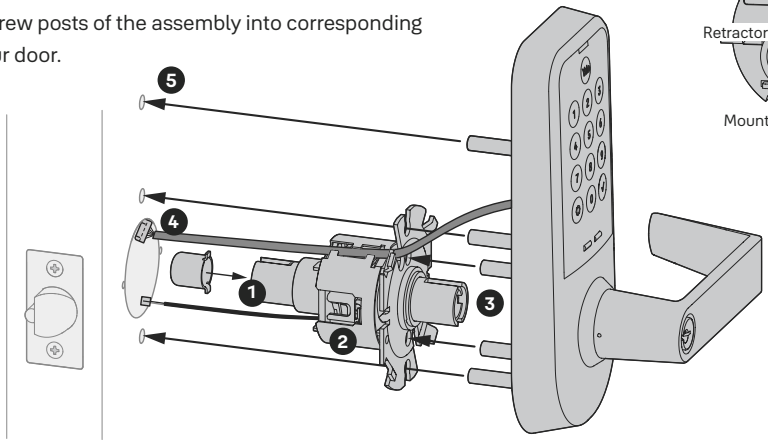

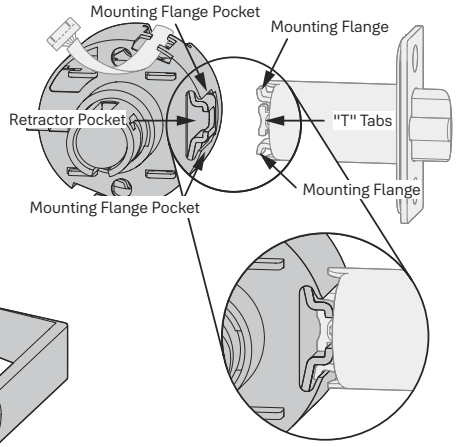

7 Install Bracket and Gasket

1. Insert the reset pin into the hole above the interior lock.
2. Remove the battery cover.
3. Loosen the screws to remove the bracket and the gasket from the back of the interior lock.
4. Guide the front wire and the motor wire through the designated hole on the bracket and the gasket.
5. Tighten the screws to secure the bracket and the gasket.

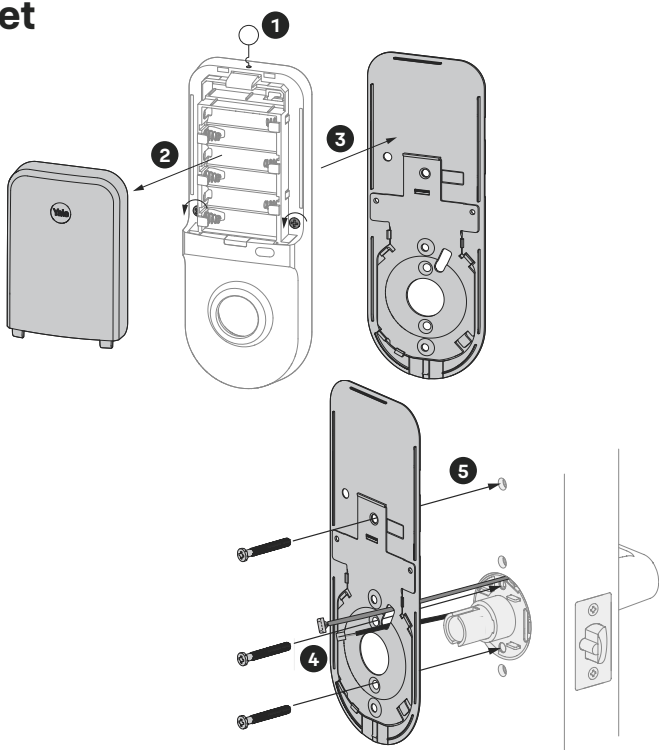

⚠ Ensure that the wire cables are not pinched to prevent it from reducing your lock's battery life.

8a Change Handing for Interior Lock (Optional)

If you do not wish to change from Right Hand to Left Hand, please proceed to step 8b. →

1. The default setting is for right-hand door, with the rex switch wire under the upper wire clip on the right.

2. To change handing for left-hand door:
- **a.** Detach the rex switch wire from the upper wire clip on the interior mounting hardware;
- **b.** Replace the rex switch wire under the lower wire clip;
- **c.** Position the interior mounting hardware so that the wire clips face the left side.

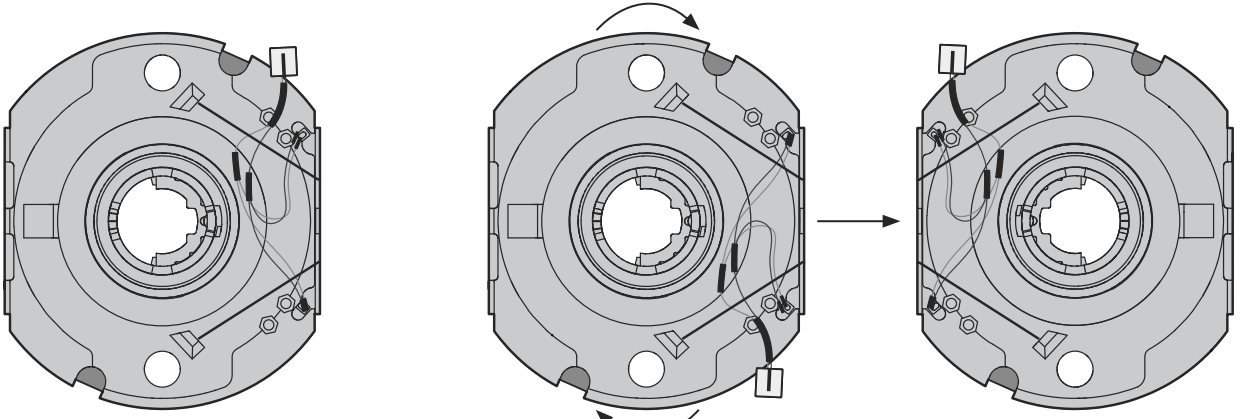

1 Right Hand **2 Left Hand**

8b Install Interior Mounting Hardware

1. Guide the front wire and the motor wire through the gaps on the interior mounting hardware.
2. Install the interior mounting hardware onto the lock body.
3. Tighten the screws to secure the interior mounting hardware.

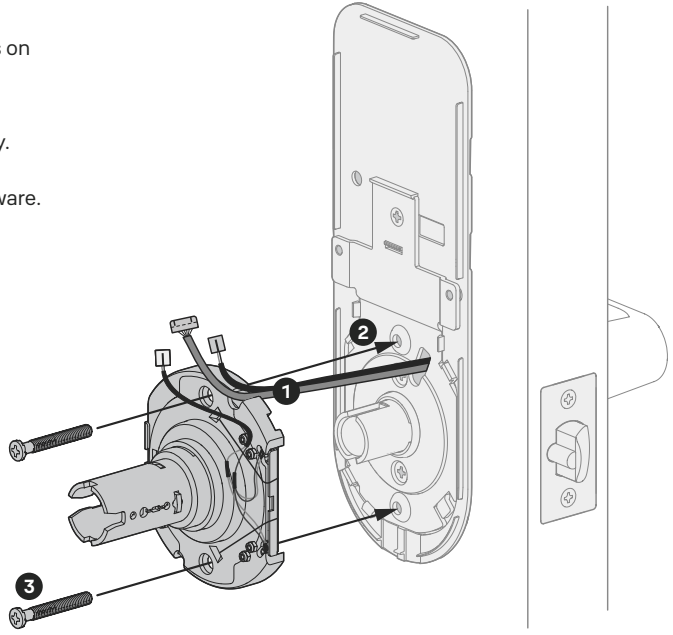

9 Attach Wire Cables to Interior Lock

1. Make sure the side of the cable end with the ridges and the marked line faces outward.
2. Push the front wire into the designated slot until it clicks into place.
3. Push the motor wire into the "**MOTOR**" slot until it clicks into place.
4. Push the rex switch wire into the "**REX**" slot until it clicks into place.
5. If an external power supply is required, push the power wire into the "**PWR**" slot until it clicks into place.

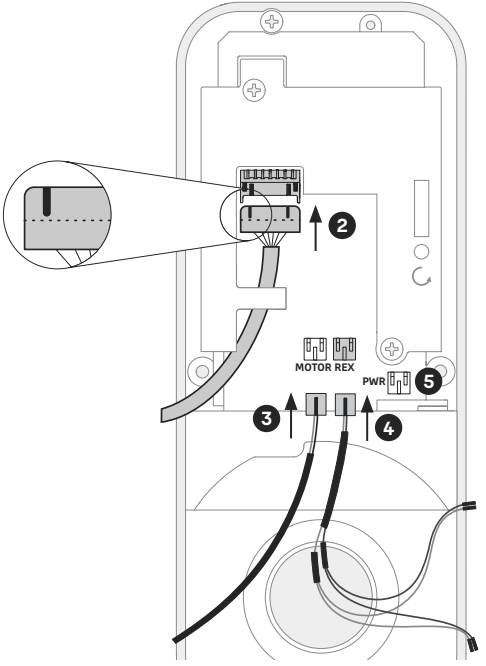

10 Install Interior Lock

1. Install the interior lock onto the mounting hardware, and tighten the screws.
2. Install the interior lever, and then pull the lever to ensure it is secured.

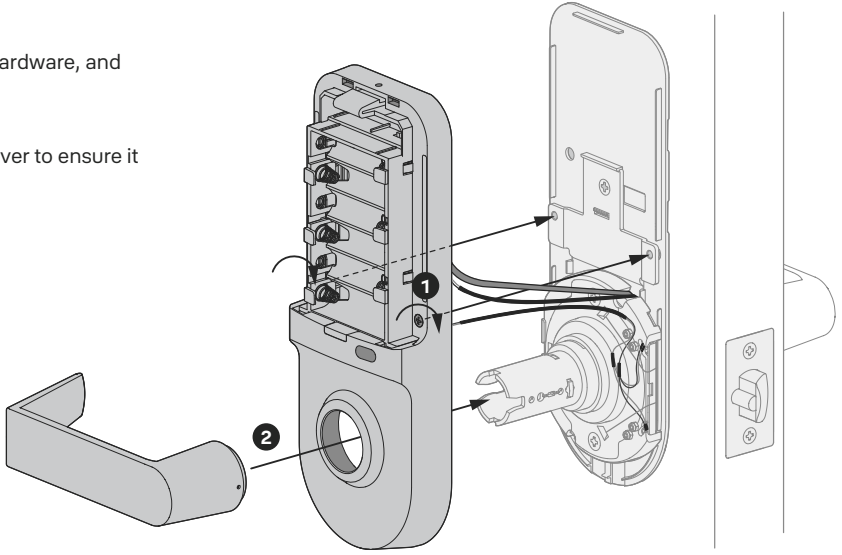

⚠ When fully tightened, lock should be flush to door.

11 Test Levers and Key

If latch bolt does not lock or unlock with the **key** (from the outside) or the **handles** (from the outside & the inside):

- Ensure that the latch bolt is centered in the face bore hole;
- Ensure that the tailpiece is positioned horizontally and inserted through the cylinder slot (**step 6b, point 3**).

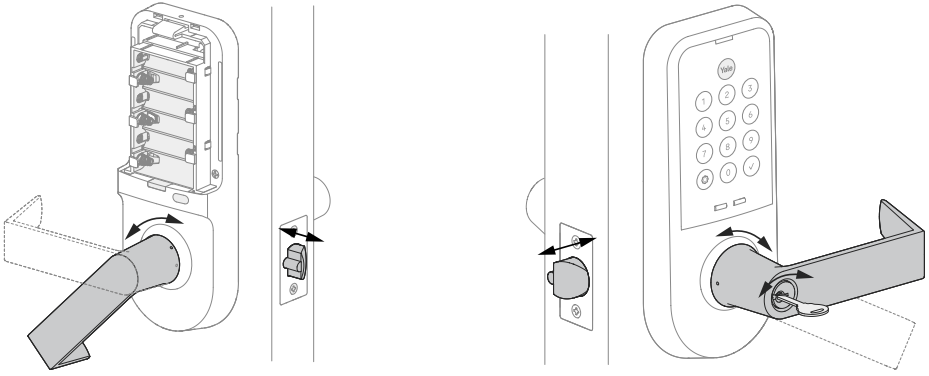

⚠ Smooth deadbolt latch operation will enhance your battery life.

12a Install DoorSense (Optional)

If you do not wish to install DoorSense, please proceed to step 13. →

⚠ Before installing DoorSense, confirm it is supported by the app the lock will be setup in.

DoorSense is a magnetic sensor installed on your door frame that can keep track of when the door is opened and closed.

For **surface mount** instructions, please proceed to **step 12b**. →

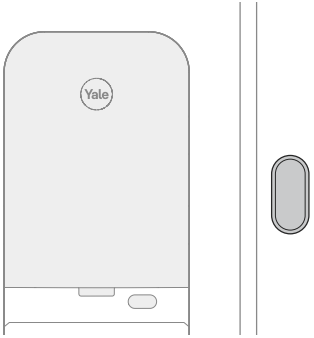

Surface mount is a quick and easy option to secure DoorSense on the inside of your door frame.

For **flush mount** instructions, please proceed to **step 12c**. →

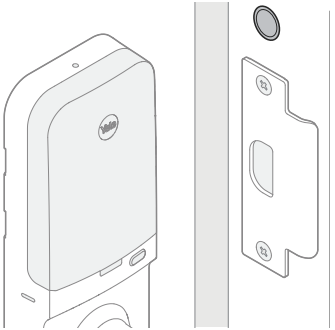

Flush mount is installing DoorSense into the edge of the door frame. It provides a cleaner look with more robust performance but requires drilling.

12b DoorSense Surface Mount

1. Remove one side of the backing from the adhesive.
2. Attach tape to the back of the DoorSense, ensuring it is aligned with the edges of the device and the screw holes.
3. Remove the remaining backing from the adhesive.
4. Determine mounting location. For optimal performance, DoorSense should be mounted within 1-1/2" from the edge of your door frame.

   Note: DoorSense will still work if placed on curved or angled trim moulding around the door frame as long as it is within 1-1/2" from the edge.
5. Ensure the center of DoorSense is in the proper position by aligning it 3-25/32" above the face bore center, and adhere it to the door frame.
6. Tighten pre-installed screws and attach cover.

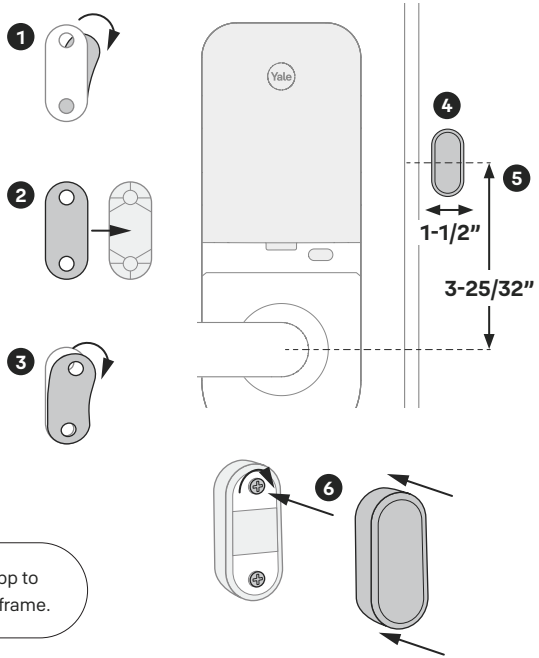

It is recommended to complete the last step after your lock is calibrated with the app to ensure you are able to retrieve accurate door state readings before modifying your frame.

12c DoorSense Flush Mount

1. Take off DoorSense cover.
2. Push the magnet out of the housing.
3. Expose the adhesive on the magnet cap by removing the blue backing.
4. Press the magnet onto the cap so that the notches interlock.
5. Determine mounting location on the door frame. The distance from the center of the strike plate to the center of the DoorSense should be 3-25/32", making the DoorSense in line with the logo on the battery cover of the lock.
6. Mark a hole that's horizontally centered on the door frame and is 19/32" in diameter.
7. Drill a 1/2" deep hole where marked.
8. Insert DoorSense into the hole.

   Note: If it is too snug to push in by hand, protect the frame with a piece of scrap wood and use light blows with a hammer or mallet. If it is too loose, try wrapping tape around it so that it fits snugly.

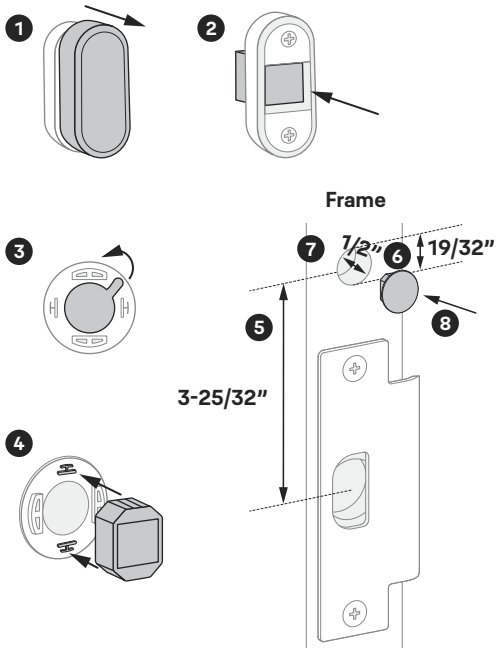

13 Install Yale Smart Module (Optional)

If your lock model does not include a Smart Module, please proceed to step 14. →

1. Insert Yale Smart Module into the designated slot at the top of the body of the lock.

> ⚠ Batteries must not be installed when inserting or removing Yale Smart Module.

Note: If you purchased your module separately, check the compatibility with your Yale Pro 2. See the table below for the list of compatible modules.

AYR-MOD-ZW4-USA	Z-Wave 800 Series Module
AYR-MOD-ZB3-USA	Zigbee 3.0 Module
AYR-MOD-WF1-USA	Wi-Fi Module
AYR202-AUG-CON	Yale Connect Bridge*

*Plugs into the wall, not the interior of the lock.

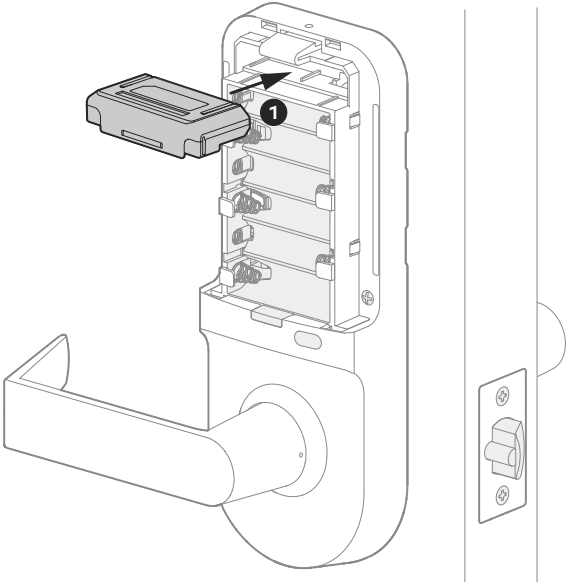

14 Install Batteries and Initial Setup

Make sure you have downloaded the partner app.

Once batteries are inserted, lock is ready to be set up with the app.

1. Install 6 batteries.

2. Complete initial setup according to your connectivity option:

Connectivity Option	Initial Setup Instructions
Bluetooth (Built-in) /Wi-Fi	a. The keypad lights up in a clockwise pattern. b. The lock automatically enters BLE pairing mode. Note: If the lock exits BLE pairing mode, simply press the Yale logo to restart. c. Open your partner app, and follow the in-app setup instructions. Scan the QR code on the battery compartment when prompted by the app.
Z-Wave/Zigbee	a. The 1 and ⚙ are illuminated on the keypad. b. The lock enters programming mode. Follow the instructions in the "Create Programming Code" section (see page 27). c. Follow the instructions in the "Configure Your Lock" section (see page 28-29) to join wireless network and set up your lock.

3. Replace cover.

Bluetooth/Wi-Fi

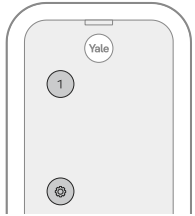

Z-Wave/Zigbee

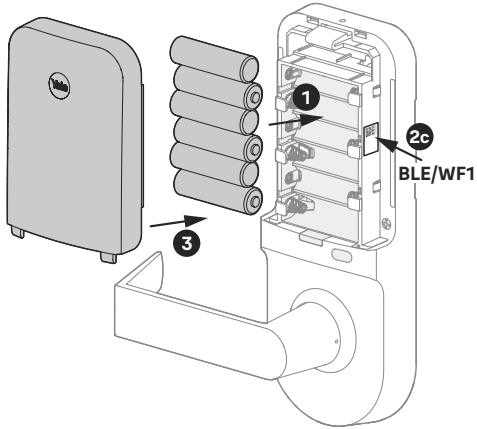

Using Your Lock

Exterior Keypad

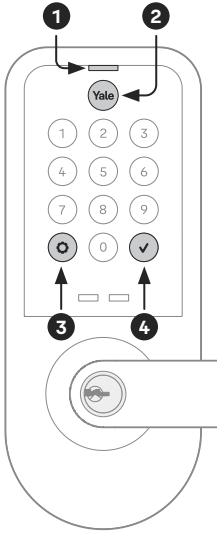

To **lock** your door

Touch or press Yale

To **unlock** your door

Touch or press Yale

With entry user code

Enter entry user code →

Press ✓

Interior Lock

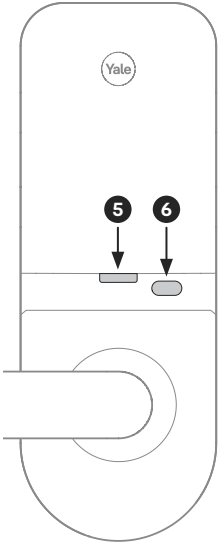

1. **Exterior LED Indicator**
2. **Wake/One-Touch Locking**
3. **Warnings/Menu**
4. **Submit Entry Code**
5. **Interior LED Indicator**
6. **Passage/Privacy Button**

Create Programming Code

Z-Wave/Zigbee: Follow this section to create programming code via keypad.

Bluetooth/Wi-Fi: Follow the instructions on your partner app to create programming code, or follow this section if required by your app.

1. Press and hold the passage/privacy button on the interior lock until the 1 and ⚙ are illuminated on the keypad.

   Note: Skip this step if the 1 and ⚙ are already illuminated.
2. Touch the 1 followed by the ⚙. Enter the settings menu.
3. Enter a 4-8 digit programming code, followed by the ⚙.

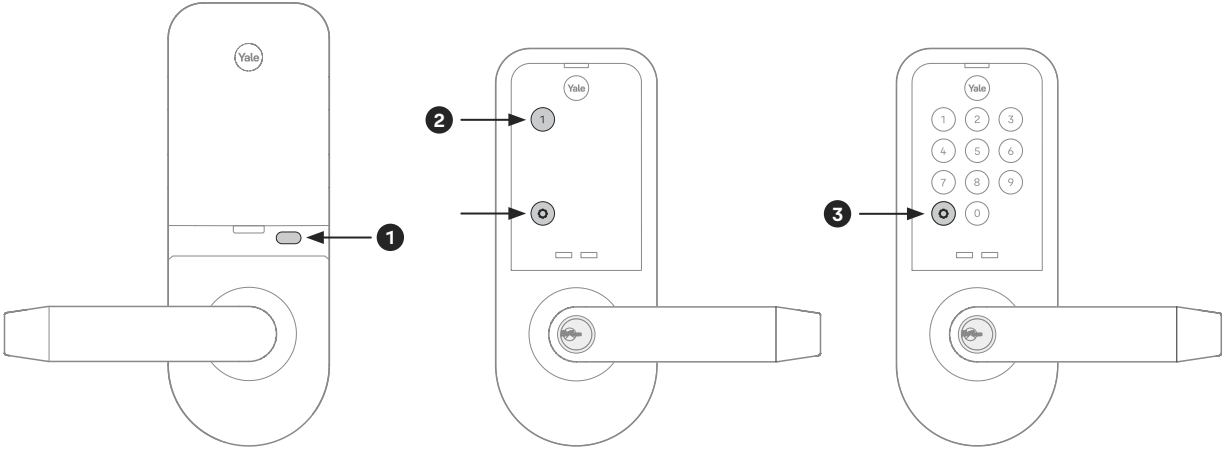

P/N YMB614/YMB624/YMB634/YMB644

Configure Your Lock (Z-Wave/Zigbee Only)

Enter the programming code you just created, and then touch ✿ to enter the settings menu. Choose the setting to change. Enter the digits corresponding to the function to be performed.

Digit		Function	Configuration							
1	✿	Programming Code Setting	1	✿	Set Programming Code			Enter a 4-8 digit programming code	✿	
2	✿	User Code Setting	1	✿	Create User Codes			Enter a 4-8 digit user code	✿	
			3	✿	Remove User codes			Enter a 4-8 digit user code	✿	
						0	0	Remove all user codes	✿	✿
3	✿	Advanced Settings	1	✿	Auto Lock	1	✿	Enable, enter a number between 1-180 seconds	✿	
						3	✿	Disable		
			2	✿	Interior LED Indicator	1	✿	Enable		
						3	✿	Disable		
			3	✿	One-Touch Lock	1	✿	Enable		
						3	✿	Disable		
			4	✿	Privacy Mode	1	✿	Enable		
						3	✿	Disable		
			6	✿	Escape Return Mode	1	✿	Enable		
						3	✿	Disable		

Configure Your Lock (Z-Wave/Zigbee Only)

Digit		Function	Configuration								
			8	⚙	DoorSense Setting	1	⚙	Calibrate & Enable DoorSense	1	⚙	Reset; Calibrate door open status
									2	⚙	Calibrate door ajar status
									3	⚙	Calibrate door close status
						3	⚙	Disable			
4	⚙	Volume Setting	1	⚙	High						
			2	⚙	Low						
			3	⚙	Silent						
6	⚙	All Code Lockout	1	⚙	Enable						
			3	⚙	Disable						
7	⚙	Wireless Module Setting	1	⚙	Join Wireless Network*						
			3	⚙	Exit Wireless Network						
8	⚙	BLE Advertising Start		⚙	Start						

*After you follow the configuration steps for joining wireless network, put your hub into inclusion mode. Lock will automatically timeout once Z-Wave/Zigbee inclusion is completed.

LED Alerts

Exterior Keypad Alerts	
Gear flashes amber	Low battery level 1
Gear flashes red	Low battery level 2
Gear flashes red, then stays red	Low battery level 3
Gear flashes white	During initial set up

Interior Lock Alerts	
LED indicator flashes blue	Low battery levels 1, 2, and 3
LED indicator flashes red	Locked state
LED indicator flashes green	Unlocked state
LED indicator flashes magenta	Passage Mode is on

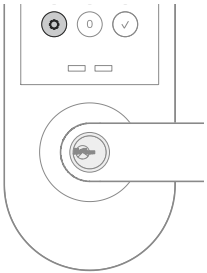

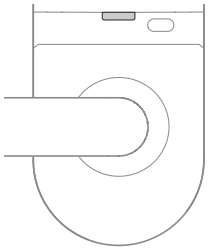

Resetting Your Lock to Factory Defaults

If you have set up your lock with the partner app, you should reset it using the app.
Go to your lock's settings and choose "Factory Reset".

1. Insert the reset pin into the desginated hole on the interior handle to remove it.
2. Insert the reset pin into the desginated hole above the interior lock to remove the battery cover. Remove one battery.
3. Untighten the screws to remove the interior lock from your door.
4. Insert reset pin into the designated reset hole on the back of the interior lock.
5. Press and hold the reset pin.
6. While holding the reset pin, reinsert battery.
7. Keep holding the reset pin for 5 more seconds.
8. After the keypad numbers light up sequentially from 1, take out the reset pin.

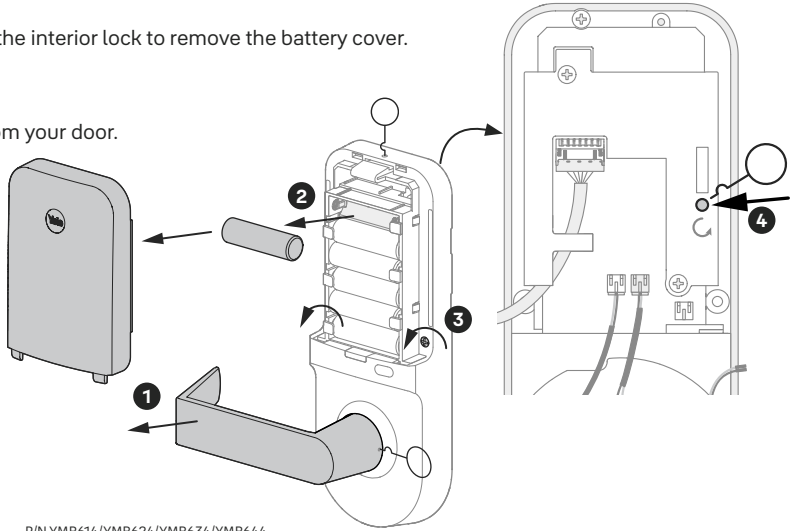

Features

Please note that features and functinality may vary depending on the partner app.

Feature	Definition	Z-Wave/Zigbee	BLE/WF1
Entry Codes	• Entry codes are used to unlock your door. Maximum number of user codes is 500.	√	√
	• Entry codes are used to lock your door when One-Touch Lock is disabled.	√	√
	• You can set permanent, recurring and temporary entry codes.	√	√
DoorSense	• DoorSense keeps track of when your door is closed or open.	√	√
Auto-Lock	• Auto-Lock automatically locks the door for you.	√	√
	• It can be set to lock on a timer for 1-180 seconds.	√	√
	• Auto-Lock is disabled by default.	√	√
	• When using the Auto-Lock feature with DoorSense, your door will not lock until it is closed.	√	√
	• Auto-Lock can be set up in the lock settings of the app or from the keypad.	√ (via keypad)	√ (via app)
Auto-Unlock	• Auto-Unlock knows when you arrive and unlocks the door as you approach.	X	√
	• Auto-Unlock can be set up in the lock settings of the app.	X	√

Features

Please note that features and functinality may vary depending on the partner.

Feature	Definition	Z-Wave/Zigbee	BLE/WF1
One-Touch Lock	• Touching or pressing the Yale logo can lock the door.	**√**	**√**
	• One-Touch Lock is enabled by default.	**√**	**√**
	• One-Touch Lock can be set up in the lock settings of the app or from the keypad.	**√ (via keypad)**	**√ (via app)**
All Code Lock Out Mode	• Restrict all entry codes from unlocking the door. When attempting to enter code while in All Code Lock Out Mode, there will be an audible lock response.	**√**	**√**
	• All Code Lock Out Mode is disabled by default.	**√**	**√**
	• All Code Lock Out Mode is configured in the lock settings of the app or from the keypad.	**√ (via keypad)**	**√ (via app)**
Escape Return	• Allow the door to remain unlocked in the case of an emergency.	**√**	**X**
	• Cause the door to automatically unlock upon opening and remain unlocked even if the door swings closed. The locking action requires at least one intentional user interaction to return to the locked state.	**√**	**X**
	• When Escape Return is enabled, Auto Lock and One-Touch Lock are automatically disabled.	**√**	**X**

Features

Please note that features and functinality may vary depending on the partner.

Feature	Definition	Z-Wave/Zigbee	BLE/WF1
Passage Mode	• Use Passage Mode when you want to disable Auto-Lock for an extended period of time.	√	√
	• Passage Mode is enabled by default.	√	√
	• Passage Mode is configured through programming code from the keypad.	√	X
	• The passage/privacy button operates based on the settings for each mode.	√	√
Privacy Mode	• Use Privacy Mode when you want to disable all keypad functions for an extended period of time.	√	√
	• Privacy Mode is disabled by default.	√	√
	• Privacy Mode is configured through the programming code from the keypad.	√	√
	• The passage/privacy button operates based on the settings for each mode.	√	√
	• Privacy Mode duration ends when door is opened and a sound indicates Privacy Mode is disabled.	√	√
Tamper Alert	• Audible alarm sounds if attempting to forcibly remove outside lock from door.	√	√

Features

Please note that features and functinality may vary depending on the partner.

Feature	Definition	Z-Wave/Zigbee	BLE/WF1
Wrong Code Entry Limit	• After the set number (Default: 3) of unsuccessful attempts at entering a valid entry code, the lock will not accept a code for the duration of the shut down time. The keypad will flash, and a red gear button will be at the bottom of the keypad.	√	√
	• The keypad will be available after the shut down time ends.	√	√
	• The wrong code entry limit can be changed via your partner app.	√	√
Shut Down Time	• Shut down for the set period of time (Default: 60 seconds) and will not allow operation until this time period ends.	√	√
	• When the unit is in shut down mode, the keypad will be flashing.	√	√
	• The shut down time can be changed via your partner app.	√	√
Volume Setting Mode	• The volume setting for entry code verification and passage/privacy button is set to High (**1**) by default.	√	√
	• The volume can be set to Low (**2**) or Silent (**3**) for quiet areas from the keypad or your partner app.	√	√
	• Menu setting and warning sounds are set to High (**1**) regardless of the volume setting.	√	√

Lock Operations Troubleshooting

Sympton	Suggested Action
Lock does not respond. There are no lights or chimes and there is no mechanical sound indicating latch bolt movement.	• Touch Yale logo to activate the keypad. • If keypad numbers are visible, check if they respond when pressed. • Check that batteries are installed and oriented correctly (polarity). Replace batteries if needed*. • Check that the keypad wire is fully connected and not pinched.
Lock does not respond – door is locked and unaccessible.	• Batteries may not have enough power. Replace batteries*. • Use mechanical key to unlock the door. • Apply 9V battery to terminals on the keypad for emergency power jump option.
Lock is on for a while then shows no reaction. Lights dim.	• Batteries do not have enough power. Replace batteries*.
Lock chimes indicating code acceptance but door will not open.	• Check for any foreign objects between door and frame. • Check that the wire is firmly connected to the interior lock.
Lock operates to allow access but will not automatically re-lock.	• Ensure Auto-Lock Mode is enabled by Master user. • Replace batteries*. • Ensure Passage Mode is disabled. • Ensure Escape Return mode is disabled.

* After replacing your batteries, it's highly recommended to use your app to lock or unlock your device. This will allow the app to connect to the lock to ensure that the internal time of the device is correct.

Sympton	Suggested Action
Gear button flashes on the keypad.	• This is the alert to replace the batteries. Replace all six (6) batteries with new AA alkaline batteries*.
Entry code will not register.	• If low battery indicator is lit, replace batteries*. • Verify that your user code consists of 4 to 8 digits. • User code may already be registered. • User code must be entered within 30 seconds (while the keypad is active) or process will have to be restarted. • √ or ⚙ cannot be used as part of the user code.
Upon entering an entry code and pressing the Check key, the lock displays error or lock times out without responding.	• Ensure All Code Lockout Mode is disabled by Master user. • The digits entered were incorrect or incomplete. Re-enter 4-8 digits followed by √. • Master user may have deleted the user code. • User code must be entered within 7 seconds (while the keypad is active) or process will have to be restarted.
Lock operates but makes no sound.	• Check if volume is set to Silent by Master user.
DoorSense does not work.	• Check for "Step 12a - Install DoorSense" on page 20.

* After replacing your batteries, it's highly recommended to use your app to lock or unlock your device. This will allow the app to connect to the lock to ensure that the internal time of the device is correct.

Hardware Troubleshooting

Sympton	Suggested Action
Door is binding.	• Check that the door and the frame are properly aligned and the door is free swinging. • Check hinges: They should not be loose or have excessive wear on knuckles.
Bolt will not deadlock.	• Check for sufficient clearance of the bolt within the strike-side jamb. Correct this by increasing the depth of the pocket for the bolt. • Check for misalignment of bolt and/or strike which may be preventing bolt from properly entering the strike. With the door open, extend and retrack the bolt; if it is smooth, check the strike alignment.
Bolt does not extend or retract smoothly.	• Bolt and strike are misaligned, see above. • Check the backset of door relative to adjustments alredy made to bolt. • Verify proper door preparation and re-bore holds that are too small or misaligned. • Verify keypad wire harness is routed properly (see step 9).
Keypad numerics are scrolling.	• Remove interior lock: **a.** Check that wire terminals are securely connected. **b.** Check that wire harness lies flat against mounting plate and is routed through wire hook on mounting plate so cable is not pinched at any point.

Use:

Use of the Works with Apple badge means that an accessory has been designed to work specifically with the technology identified in the badge and has been certified by the developer to meet Apple performance standards.

Apple is not responsible for the operation of this device or its compliance with safety and regulatory standards.

Apple®, Apple Home™, Apple Watch®, HomeKit®, and iPhone® are trademarks of Apple Inc., registered in the U.S. and other countries and regions.

Google, Google Play and Google Home are trademarks of Google LLC.

Amazon, Alexa and all related logos are trademarks of Amazon.com, Inc. or its affiliates.

Wi-Fi is a registered trademark of Wi-Fi Alliance®.

The Bluetooth® word mark and logos are registered trademarks owned by Bluetooth SIG, Inc. and any use of such marks by Yale is under license. Other trademarks and trade names are those of their respective owners.

FCC and IC RF Radiation Exposure Statement: This equipment complies with FCC and IC RF Radiation exposure limits set forth for an uncontrolled environment. This device and its antenna must not be co-located or operating in conjunction with any other antenna or transmitter. This equipment should be installed and operated with a minimum distance of 20 cm between the radiator and your body.

RF du FCC et IC d'exposition aux radiations: Cet équipement est conforme à l'exposition de FCC et IC rayonnements RF limites é-tablies pour un environnement non contrôlé. L'antenne pour ce transmetteur ne doit pas être même endroit avec d'autres émetteur sauf conformément à FCC et IC procédures de produits Multi-émetteur. Cet équipement doit être installé et utilisé avec une distance minimale de 20 cm entre le radiateur et votre corps.

FCC:

FCC ID: MZR-YMB624

FCC Part 15.19 This device complies with Part 15 of the FCC Rules. Operation is subject to the following two condition: (1) This device may not cause harmful interference, and (2) this device must accept any interference received, including interference that may cause undesired operation

FCC Part 15.21 Any changes or modifications (including the antennas) to this device that are not expressly approved by the manufacturer may void the user's authority to operate the equipment

Class B Equipment

This equipment has been tested and found to comply with the limits for a Class B digital device, pursuant to Part 15 of the FCC Rules. These limits are designed to provide reasonable protection against harmful interference in a residential installation. This equipment generates, uses, and can radiate radio frequency energy and, if not installed and used in accordance with the instructions, may cause harmful interference to radio communications. However, there is no guarantee that interference will not occur in a particular installation. If this equipment does cause harmful interference to radio or television reception, which can be determined by turning the equipment off and on, the user is encouraged to try to correct the interference by one or more of the following measures:

- Reorient or relocate the receiving antenna.
- Increase the separation between the equipment and receiver.
- Connect the equipment into an outlet on a circuit different from that to which the receiver is connected.
- Consult the dealer or an experienced radio/TV technician for help.
- Distance between EUT and users is 20 cm.

Warning:

Changes or modifications to this device, not expressly approved by **Yale Home** could void the user's authority to operate the equipment.

Industry Canada:

IC ID: 2676A-YMB624

This Class A digital apparatus meets all requirements of the Canadian Interference Causing Equipment Regulations.

This device contains licence-exempt transmitter(s)/receiver(s) that comply with Innovation, Science and Economic Development Canada's licence-exempt RSS(s). Operation is subject to the following two conditions:

(1) This device may not cause interference.

(2) This device must accept any interference, including interference that may cause undesired operation of the device.

L'émetteur/récepteur exempt de licence contenu dans le présent appareil est conforme aux CNR d'Innovation, Sciences et Développement économique Canada applicables aux appareils radio exempts de licence. L'exploitation est autorisée aux deux conditions suivantes:

(1) L'appareil ne doit pas produire de brouillage;

(2) L'appareil doit accepter tout brouillage radioélectrique subi, même si le brouillage est susceptible d'en compromettre le fonctionnement.

CAN ICES-3 (B) / NMB-3 (B)

Yale Home

24/7 Support: 1-855-213-5841 • support.shopyalehome.com

Yale® and Pro® 2 are registered trademarks of Master Lock Company LLC and its affiliates. Other products' brand names may be trademarks or registered trademarks of their respective owners and are mentioned for reference purposes only. ©Copyright 2025. All rights reserved. Reproduction in whole or in part without the express written permission of Master Lock Company LLC or its affiliates is prohibited.

Trusted Every Day

P/N YMB614/YMB624/YMB634/YMB644

Yale Locks

Z-Wave® 800 Series System Integrators Guide

Yale Multi-Family Cylindrical Commercial Grade Lever Locks

Document Revision: 2.6

January 2026

Contents

Revision History 4
Yale Z-Wave Plus® Product Info 5
Network Operations 5
Enroll/Add device to network (SmartStart) 5
Long Range Capabilities 5
Enroll/Add device to network (Classic Inclusion Mode) 6
Un-enroll/Remove device from network (Exclusion Mode) 6
Factory Reset 6
Supported Command Classes 7
Command Class Z-Wave Plus® Info, Version 2 7
Command Class Manufacturer Specific, Version 2* 8
Command Class Security, Version 1 8
Command Class Security 2, Version 1 8
Command Class Device Reset Locally, Version 1* 9
Command Class Power Level, Version 1* 9
Command Class Version, Version 3* 10
Command Class Battery, Version 1* 11
Command Class Door Lock, Version 4* 11
Command Class Door Lock Logging, Version 1* 11
Command Class User Code, Version 2* 12
Command Class User Credential, Version 1* 16
Command Class Schedule Entry Lock, Version 3* 16
Command Class Time Parameters, Version 1* 17
Command Class Time, Version 2 17
Command Class Firmware Update Meta Data, Version 5* 18
Command Class Association, Version 2* 19
Command Class Multi Channel Association, Version 3* 19
Command Class Association Group Info, Version 3* 20
Command Class Notification, Version 8* 22

Command Class Configuration, Version 4* 28
Command Class Application Status, Version 1 31
Command Class Transport Service, Version 2 31
Command Class Supervision, Version 1 31
Command Class Indicator, Version 3* 31
Command Class Basic, Version 2* 32

* This command class requires security.

Revision History

Rev.	Details
1.0	Initial Release
2.0	• Updated Notification Table • Updated Minimum Firmware Versions • Updated Trademark • Updated Factory Reset Instructions • Updated Indicator Table • Added Long Range Capabilities • Added Schedule Entry Lock Command Class
2.1	• Updated firmware for lock and module
2.2	• Added User Credential Association Report in Lifeline
2.3	• Updated firmware for lock and module
2.4	• Updated firmware for lock and module • Include expectations for User Credential: Credential Learn Start /Report with Yale Lock
2.5	• Fixed default value on Configuration Parameter 4 (Wrong Code Entry Limit) to be value 3. • Fixed Non-Access/Messaging Notification for User Code CC backwards compatibility to report Z-Wave Event 0x20. • Updated Configuration Parameter 18 (Door Propped Timer) to include the [5] Footnote. • Updated sections Command Class User Credential and Command Class User Code to include best practices for Credential Management and information on Scheduling support.
2.6	• Include other Product IDs

Yale Z-Wave Plus® Product Info

Manufacturer ID: Fortune Brands Innovations, Inc. [FBIN] (0x0463)

Z-Wave® Device Type: Door Lock Keypad

Z-Wave® Role Type: Listening Sleeping End Node (LSEN)

Network Operations

Enroll/Add device to network (SmartStart)

SmartStart enabled products can be added into a Z-Wave® network by scanning the Z-Wave® QR Code present on the product with a controller providing SmartStart inclusion. No further action is required and the SmartStart product will be added automatically within 10 minutes of being switched on in the network vicinity.

- Open the Z-Wave® system's smart home app via smartphone or tablet and follow the in-app prompts to add a new device.
- SmartStart works when the Z-Wave® system has the DSK saved and one of the following are true:
    - The lock has the minimum Radio Module firmware version AND is in a factory-reset state:
        - AYR-MOD-ZW4-USA: v5.1.12
            - Version CC-Version_Report-FW 0 Version: 0x05 & FW 0 Sub Version: 0x01
            - Version CC-Version_ZWave_Software_Report-Application Version: 0x05 0x01 0x0C
    - The lock has the minimum Lock firmware version AND is in a factory-reset state:
        - YMB614/624/634/644 v1.5.18:
            - Version CC-Version_Report-FW Version: 0x0F & FW Sub Version: 0x12
    - An internal key has already been established.

Long Range Capabilities

The lock can be included via Z-Wave® Long Range SmartStart if the controller also supports Z-Wave® Long Range. However, the lock does not allow other nodes to be included via Z-Wave® Long Range.

Enroll/Add device to network (Classic Inclusion Mode)

- Enter the 4–8-digit Programming PIN code followed by the ⚙ key.
- Press the 7 key followed by the ⚙ key.
- Press the 1 key followed by the ⚙ key.
- Scan the QR code, if prompted, or…
- Enter the first five (5) digits of the DSK if prompted.

Un-enroll/Remove device from network (Exclusion Mode)

- Enter the 4–8-digit Programming PIN code followed by the ⚙ key.
- Press the 7 key followed by the ⚙ key.
- Press the 3 key followed by the ⚙ key.

When the Yale lock is unenrolled/excluded from the network through the device menu mode, any changes previously made to the user code database and configuration settings will be retained, as opposed to set back to defaults.

Factory Reset

- Factory resetting the lock with the Z-Wave® module installed will clear the Z-Wave® network settings, causing the device to be removed from the network.
- The following is the method of performing a factory reset:

1. Insert the reset pin into the desginated hole on the interior handle to remove it.
2. Insert the reset pin into the desginated hole above the interior lock to remove the battery cover. Remove one battery.
3. Untighten the screws to remove the interior lock from your door.
4. Insert reset pin into the designated reset hole on the back of the interior lock.
5. Press and hold the reset pin.
6. While holding the reset pin, reinsert battery.
7. Keep holding the reset pin for 5 more seconds.
8. After the keypad numbers light up sequentially from 1, take out the reset pin.

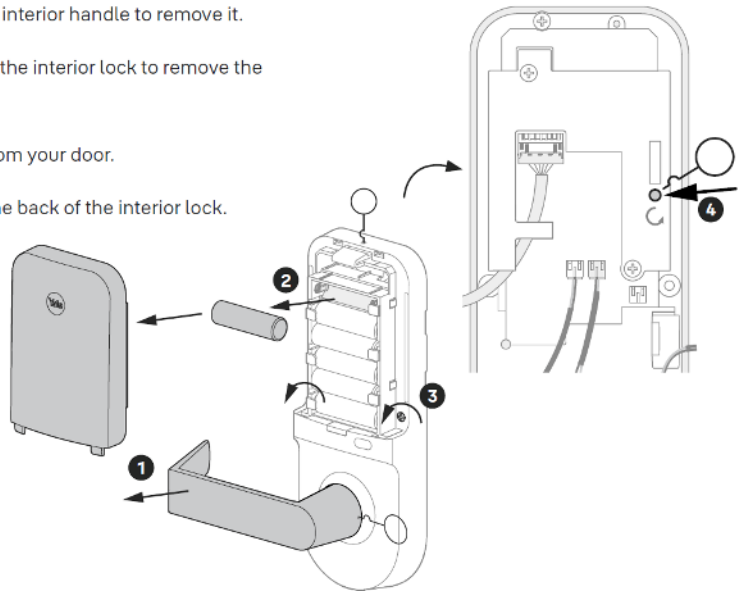

Supported Command Classes

The Yale Z-Wave Plus® locks follow the Z-Wave® Command Class Specifications for all command classes that are implemented. Please refer to these specifications for specifics on how each command class works. The supported command classes are listed below, and certain sections contain details about operations that may be specific to the Yale lock. If a section is blank, then please refer to the Z-Wave® specifications.

As a security device, most of the command classes supported by the lock are required to be sent securely with Z-Wave® security. During enrollment, the controller can use the Security Command Class to get this list directly from the lock. If a command class requires security, it is also indicated as follows.

Specification used: Z-Wave® Specifications Release 2025 A

Command Class Z-Wave Plus® Info, Version 2

The Z-Wave Plus® Info command class reports the following information:

- Role Type: Listening Sleeping End Node (0x07)
- Node Type: Z-Wave Plus® Node (0x00)
- Installer Icon Type: 0x0300
- User Icon Type: 0x0300

Command Class Manufacturer Specific, Version 2*

* This command class requires security.

The Manufacturer Specific command class reports the following information:

- Manufacturer ID: 0x0463
  - This is the manufacturer ID assigned to Fortune Brands Innovations, Inc. [FBIN].
- Product ID:
  - The Product ID can be used to differentiate between hardware platforms, as well as between ZW2, ZW3, and ZW4. See Table 1 - First 2 Digits of Product ID, below, for details.
  - Product IDs for the locks covered in this document are as follows:
    - Default 0x8B36 - YMB614-ZW4: 2nd Generation Keyed Push Button interface
    - 0x8B37 or Default 0x8B36 - YMB624-ZW4: 2nd Generation Keyed Touch Screen interface
    - 0x8B38 or Default 0x8B36 - YMB634-ZW4: 2nd Generation Keyless Push Button interface)
    - 0x8B39 or Default 0x8B36 - YMB644-ZW4: 2nd Generation Keyless Touch Screen interface
- Product Type ID:
  - 0x8122 for YMB614/624/634/644-ZW4 (2nd Generation Cylindrical lock)

Table 1 - First 2 Digits of Product ID

	Z-Wave® Type			**Platform**					**Hex Value**
[0x8122]-ZW2 ***(Not Tested for Cert)***	0	0	0	0	0	1	1	0	**0x0B**
[0x8122]-ZW3 ***(Not Tested for Cert)***	0	1	0	0	0	1	1	0	**0x4B**
0x8122]-ZW4	1	0	0	0	0	1	1	0	**0x8B**

Command Class Security, Version 1

This command class has been implemented by the Z-Wave® Specification.

Command Class Security 2, Version 1

This command class has been implemented by the Z-Wave® Specification.

Command Class Device Reset Locally, Version 1*

* This command class requires security.

The Yale door locks covered in this guide can be reset to their factory default settings by manually resetting the lock or by BLE command via app for BLE locks (by following the procedure outlined in the specific lock's manual).

Upon factory reset, all Z-Wave® network settings are cleared, all the user codes are erased from the lock (including the programming code), and all configurable settings are reset to default values. A factory reset leaves the lock in a completely unsecure state (waiting for the programming code to be set), so care should be taken if using the configuration parameter to perform a remote reset. However, if the DUT is unenrolled/excluded from the network through the device menu mode, then the user code database and configuration settings will not be reset to the defaults.

Command Class Power Level, Version 1*

* This command class requires security.

This command class has been implemented by the Z-Wave® Specification.

The Power Level command class was implemented to allow controllers to set the transmit power for the door lock. This could be useful in large networks with many nodes, so that the lock can find working routes back to the controller while transmitting at a lower power. This ensures robust routes when the normal transmit power level is restored.

Currently there is no way to initiate a low power enrollment; this command class can only be used once the lock is enrolled successfully.

Command Class Version, Version 3*

* This command class requires security.

The Yale locks are a multi-processor system with 1 additional firmware target. All processors can be updated through the Firmware Update Meta Data command class. The firmware targets are numbered as follows:

- Firmware Target 0 = Z-Wave® Chip
- Firmware Target 1 = Lock Processor

To identify the firmware version for each target, the hex data in the firmware version report must be converted to decimal prior to combining major and minor version into the full version.

After a controller sends a Version Get command the log will display the Version Report like the below:

```
Send VERSION_GET to node 16 started
Send VERSION_GET to node 16 completed in 00:00:01.242
Rx [S2_ACCESS] VERSION_REPORT(86 12) + 03 07 10 02 22 02 01 2C 00
```

The above Version Report will be defined as this in the Z-Wave® sniffer tool, Zniffer:

```
Command Class Version ver.3
Version Report
    Z-Wave Library Type:          0x03
    Z-Wave Protocol Version:      0x07
    Z-Wave Protocol Sub Version:  0x10
    Firmware 0 Version:           0x02
    Firmware 0 Sub Version:       0x22
    Hardware Version:             0x02
    Number of firmware targets:   0x01
  ▾ vg 1:                         2C 00
      Firmware Version:             0x2C
      Firmware Sub Version:         0x00
```

For Firmware Target 0, the Firmware 0 Version (0x02) and Sub version (0x22) translate to module firmware decimal value of “2.34”.

For Firmware Target 1 (the data under vg1), Firmware Version (0x2C) and Sub version (0x00) translate to lock firmware decimal value of “4.3.00”.

Command Class Battery, Version 1*

* This command class requires security.

Per the Z-Wave Plus® Specification, the lock will send a Battery Report with a value of 0xFF to the Lifeline node when a critical battery level is reached (at about 6.0V). In addition, Yale Locks provide 2 earlier low battery alarms through the notification command class (see Table 7 - Command Class Notification, Version 8*).

Low battery alarms will be generated if the lock is in a low battery state during one of the following events: any motor activation (keypad lock/unlock, RF lock/unlock, etc.), controller sends Get Battery command, or the unsolicited battery report was triggered. Yale locks will generate an unsolicited Battery Report every power cycle and every 8 hours if a node is listed in the Lifeline Group.

Command Class Door Lock, Version 4*

* This command class requires security.

Yale Z-Wave Plus® locks support three door lock modes: Door Secured (0xFF), Door Unsecured (0x00), and Door Unsecured with timeout (0x01). When Auto Relock is enabled, the lock will automatically relock after all unlock events. Yale Z-Wave Plus® locks do not support any of the "Door Unsecured for outside Door Handles" (0x20, 0x21) or "Door Unsecured for inside Door Handles" (0x10, 0x11) modes.

Command Class Door Lock Logging, Version 1*

* This command class requires security.

This command class has been implemented by the Z-Wave® Specification.

Command Class User Code, Version 2*

* This command class requires security.

NOTE: A controller should use only one of the command classes (CC) to manage credentials in the lock. User Code CC or User Credential CC and never both. If User Code CC is chosen to manage credentials, schedules can be applied to User Codes via Schedule Entry Lock CC.

Versions 1 and 2 of this command class can address user code slots 1 through 250 via the User Code Set/Get/Report commands. Version 2 of this command class also includes extended versions of each of these commands, used to address the extended range of users.

Table 2 – Expected Reports for Set/Get Commands

Command	Slots 1-250	Slot 251	Slots 252-254	Slot 255	Slots 256-500
User Code CC v1/v2: User Code Get	User Code Report	User Code Report	User Code Report	User Code Report	N/A
User Code CC v1/v2: User Code Set	User Code Report	Admin Code Report	User Code Report	User Code Report	N/A
User Code CC v2: Extended User Code Get	Extended User Code Report	Extended User Code Report	Extended User Code Report	Extended User Code Report	Extended User Code Report
User Code CC v2: Extended User Code Set	Extended User Code Report	Extended User Code Report	Extended User Code Report	Extended User Code Report	Extended User Code Report

The admin code can be accessed (read/write) using slot 251 (0xFB), if using version 1 of this command class. For version 2, the Admin Code Set/Get/Report commands must be used.

Yale locks do not support bulk commands (setting or getting multiple user codes at once) or CRC functionality for this command class.

It should be noted that the lock's operation mode (called "User Code Keypad Mode" in this command class) can be modified through Version 2 of this command class, or through parameter 8 of the Configuration command class. This is the only parameter that can be modified through more than one command class.

The following implementation notes apply specifically to non-access user codes:

- The usage of non-access users has changed slightly with ZW3/ZW4, compared to ZW2, but is still backwards compatible. If a User Code Set is transmitted using version 1 of the command class, then the lock will accept a value of 0x04 as the status for the non-access user.
- Previously, a value of 0x04 was reserved for setting up non-Access users, as stated above. When using version 2 of this command class, a non-Access (now called "Messaging") user ID status is assigned a value of 0x03. This value of 0x03 should be used with the Extended User Code Set command.
- A non-access user can be identical to a "normal" PIN code, aside from the fact that it does *not* grant access.
- Any available user code slot (except the admin code) can be used to store non-access user code.
- Schedules can be applied to non-access users.

Yale locks support the following User ID Status values:

Table 3 - User ID Status User Code CC v1 vs v2

User ID Status	**User Code CC v1 Set**	**User Code CC v1 Report Value**
Description	*Value*	*Value*
Available	0x00	0x00
Enabled / Grant Access	0x01	0x01
Disabled	0x02	0x03
	0x03	
Messaging: The user code is accepted, but the lock does not grant access to the user. Instead, it generates an alarm to the Lifeline and does NOT take preventative actions for further attempts to enter the User ID and/or User Code.	0x04	0x04
One-Time Use: This PIN is disabled immediately after being used for a successful unlock operation.	0x06	0x06
Expiring: This PIN is disabled once a specified amount of time has passed after being used for a successful unlock operation. The expiration time is set through the Configuration command class.	0x07	0x07

User ID Status	User Code CC v2: Extended User Code Set	User Code CC v2: Extended User Code Report Value
Description	*Value*	*Value*
Available	0x00	0x00
Enabled / Grant Access	0x01	0x01
Disabled	0x02	0x02
Messaging: The user code is accepted, but the lock does not grant access to the user. Instead, it generates an alarm to the Lifeline and does NOT take preventative actions for further attempts to enter the User ID and/or User Code.	0x03	0x03
One-Time Use: This PIN is disabled immediately after being used for a successful unlock operation.	0x06	0x06
Expiring: This PIN is disabled once a specified amount of time has passed after being used for a successful unlock operation. The expiration time is set through the Configuration command class.	0x07	0x07

Command Class User Credential, Version 1*

* This command class requires security.

This command class has been implemented by the Z-Wave® Specification.

NOTE: A controller should use only one of the command classes (CC) to manage credentials in the lock. User Code CC or User Credential CC and never both. If User Credential CC is chosen to manage credentials, schedules via Schedule Entry Lock CC are not supported. User Credential CC will support schedules once Active Schedule CC becomes available.

The Cylindrical Yale locks allow the controller to apply 5 Credentials per User within a maximum of 500 Users. The total number of Credentials is 500 pin codes (**Additional Credentials for RFID will be supported at a future date.).*

When Credential Learn Start is sent to our Yale locks for Pin code credentials, we limit the Credential Learn Timeout values from 1-30 seconds (if the timeout value is set > 30, the lock will default the timeout back to 30 seconds). For the Credential Learn Report (Started): Credential Learn Steps Remaining, Pin Code credential has a value of 1.

Command Class Schedule Entry Lock, Version 3*

* This command class requires security.

Yale locks support Year Day Schedule types and Daily Repeating Schedule types. Yale locks allow the controller to apply multiple schedules to a single user code slot. Each user code slot has 1 Year Day Schedule slot (Slot ID 1) and 7 Daily Repeating slots (Slot IDs 1 – 7). If user scheduling is used in the lock, then the controller **MUST** set the lock's time using the Time Parameters command class.

Command Class Time Parameters, Version 1*

* This command class requires security.

The controller must set the Time Parameters in the lock anytime the lock loses power. After 10 seconds of lock enrollment, if there are no messages from the controller the lock will initially request the Time (by sending Time Get and Time Parameter Get commands). If the time is not set by the controller, then user codes with schedules applied to them cannot be granted access. When the lock is powered up, it will generate a Notification Report to indicate to the controller that power has been applied (Alarm V1 Type = 0x82, Alarm V1 Level = 0x00, Event Type = 0x08, Event Value = 0x01). This indicates to the controller that the lock no longer has a valid time set.

If the controller does not support either the Time CC or Time Parameters CC, then scheduled users will not have access.

Command Class Time, Version 2

The controller must set the Time Parameters in the lock anytime the lock loses power. Even though the Time CC is not secure, the Time Set command must be issued at the same or higher security level as when the device was enrolled for time to be set otherwise it will be rejected by the device. After 10 seconds of lock enrollment, if there are no messages from the controller the lock will initially request the Time (by sending Time Get and Time Parameter Get commands). If the time is not set by the controller, then user codes with schedules applied to them cannot be granted access. When the lock is powered up, it will generate a Notification Report to indicate to the controller that power has been applied (Alarm V1 Type = 0x82, Alarm V1 Level = 0x00, Event Type = 0x08, Event Value = 0x01). This indicates to the controller that the lock no longer has a valid time set.

If the controller does not support either the Time CC or Time Parameters CC, then scheduled users will not have access.

A time sync should occur every 8 hours, starting with the Time CC. If there is no response within a minute, the next step is to issue a Time Parameters Get to sync time.

Command Class Firmware Update Meta Data, Version 5*

* This command class requires security.

Yale Z-Wave Plus® locks support over-the-air (OTA) upgrading of 2 firmware targets:

1. Firmware Target 0: Z-Wave® chip
2. Firmware Target 1: The lock main processor

Firmware Target 0 is used to determine the correct Z-Wave® processor image to download. Firmware Target 0 ID is always 0xA600, to signal this is a Fortune Brands Innovation, Inc. Z-Wave® image.

Firmware 1 target will depend on which version of the lock is in use (mapped to the Product Type ID).

- For YMB614/624/634/644-ZW4 (2nd Generation Cylindrical lock), Firmware 1 ID = 0x8122

After an OTA is performed (a Firmware Update Status Report should return with successful), there is an additional step internally where we write/apply the image to the lock/module. When the image is being applied to the lock, the lock is unresponsive until completion of the applied image. Once the completion of the OTA image is applied the lock silently reboots and a Notification Report is sent. For Module OTA, Notification Report with Alarm Type 0x82 is sent while for Lock OTA, Notification Report with Alarm Type 0x51 is sent to indicate the OTA is completed and the lock can now be used.

The following is the time it takes for each product to complete OTA packet transfer + image apply phase:

- For Z-Wave® Radio Chip
  - Non-Long-Range Node
    - ~6 minutes (full image total time*)
  - Long-Range Node
    - ~3 minutes (full image total time*)
- For YMB614/624/634/644-ZW4 (2nd Generation Cylindrical lock),
  - Non-Long-Range Node
    - ~>=32 minutes (full image total time*)
    - ~2 minutes (patch/differential image total time *)
  - Long-Range Node
    - ~>=21 minutes (full image total time*)
    - ~2 minutes (patch/differential image total time *)

** Total Time includes packet transfer from controller to module and then writing time from module. After an OTA, Yale has an additional step internally where we write/apply the image to the lock and the lock is unresponsive. For this lock, it takes ~1.5 minutes (patch) or ~15 minutes (full) to complete the writing of the Lock OTA image and then silent reboots the lock. The internal step also occurs for radio OTA, but it takes seconds to apply the radio image. **

Command Class Association, Version 2*

* This command class requires security.

This command class has been implemented by the Z-Wave® Specification.

Command Class Multi Channel Association, Version 3*

* This command class requires security.

This command class has been implemented by the Z-Wave® Specification.

Yale locks support only one group, which can contain up to 5 nodes.

Command Class Association Group Info, Version 3*

* Command Class Requires Security

Yale locks support the Lifeline Association Group.

Table 5 - Association Table

Group ID	Maximum Nodes	Description	Commands

1	5	Lifeline	• Command Class Door Lock (0x62)
			  ○ Door Lock Operation Report (0x03)
			  ○ Door Lock Configuration Report (0x06)
			• Command Class Notification (0x71)
			  ○ Notification Report (0x05)
			• Command Class User Code (0x63)
			  ○ User Code Report (0x03)
			  ○ Extended User Code Report (0x0D)
			  ○ User Code Keypad Mode Report (0x0A)
			  ○ Admin Code Report (0x10)
			• Command Class User Credential (0x83)
			  ○ User Report (0x07)
			  ○ Credential Report (0x0C)
			  ○ User Credential Association Report (0x13)
			  ○ Admin Pin Code Report (0x1C)
			• Command Class Battery (0x80)
			  ○ Battery Report (0x03)
			• Command Class Device Reset Locally (0x5A)
			  ○ Device Reset Locally Notification (0x01)
			• Command Class Indicator (0x87)
			  ○ Indicator Report (0x03)

The following are the actions to trigger the reports:

Table 6 – Lifeline Report Trigger Table

Report Command	**RF Trigger**	**Manual Trigger**
Battery Report	Any RF Lock Operation when lock is under the battery thresholds	Any keypad Lock Operation when lock is under the battery thresholds or Power Cycle Lock
Notification Report (Access Control)	Any RF Lock Operation	Manual or Keypad Unlock/Lock
Notification Report (Power Management)	Any RF Lock Operation when lock is under the battery thresholds	Any keypad Lock Operation when lock is under the battery thresholds or Power Cycle Lock
Door Lock Operation Report	Door Lock Operation Set Command	Keypad Unlock/Lock
Door Lock Configuration Report	Door Lock Configuration Set Command	Enable/Disable Auto-Relock Feature via Keypad
Indicator Report	Indicator Set Command	
Device Reset Locally Notification		HW Factory Reset
User Code Report	Add/Delete User Code via User Code Set Command	Add/Delete User Code via Keypad from Slots 1-250
Extended User Code Report	Add/Delete User Code via Extended User Code Set Command	Add/Delete User Code via Keypad from Slots 251-500
User Code Keypad Mode Report	User Code Keypad Mode Set Command	Enable/Disable Vacation Mode or Privacy Mode (refer to Installation Manual)
Admin Code Report	Admin Code Set Command	Update/Modify Admin/Programming Code via Keypad
User Report	RF Add/Delete User Code via User Set Command	Add/Delete User Code via Keypad
Credential Report	Add/Delete User Credential (pin code or RFID [future use]) via Credential Set	Add/Delete User Credential (pin code or RFID [future use]) via Keypad
Admin Pin Code Report	Admin Pin Code Set Command	Update/Modify Admin/Programming Code via Keypad
User Credential Association Report	User Credential Association Set Command	

Command Class Notification, Version 8*

* This command class requires security.

Table 7 - Notification Table

Alarm Reports	Alarm type	Alarm Level	Description	Notification Type	Event
Credential Unlock	0x00	0x00	Where Event Parameter represents the User Slot, Credential Slot, and Credential Type	0x06	0x24
Credential Lock	0x00	0x00	Where Event Parameter represents the User Slot, Credential Slot, and Credential Type	0x06	0x23
Deadbolt Jammed [0]	0x09	0x01	Deadbolt jammed while locking	0x06	0x0B
		0x02	Deadbolt jammed while unlocking	0x06	0x0B
Keypad Lock	0x12	0x (01 - FF)	Where Alarm level represents user slot number (0x00 = Master Code). Where Event Parameter represents User Code Report. (Use Event Parameter to determine pin code used)	0x06	0x05

		0x (0100 – 01F4)	Alarm level represents a truncated user slot number. Where Event Parameter represents Extended User Code Report. (Use Event Parameter to determine slot number and pin code used)	0x06	0x21
Keypad Unlock	0x13	0x (01-FF)	Where Alarm level represents user slot number (0x00 = Master Code). Where Event Parameter represents User Code Report. (Use Event Parameter to determine pin code used)	0x06	0X06
		0x (0100 – 01F4)	Alarm level represents a truncated user slot number. Where Event Parameter represents Extended User Code Report. (Use Event Parameter to determine slot number and pin code used)	0x06	0x22
Manual Lock	0x15	0x01 [0]	by key cylinder or inside thumb-turn	0x06	0x01
		0x02	by touch function (lock and leave)	0x06	0x01
		0x03	By inside button	0x06	0x01
Manual Unlock [0]	0x16	0x01	By key cylinder or inside thumb turn	0x06	0x02
		0x02	By inside button	0x06	0x02
RF Operate Lock	0x18	0x01	by RF module	0x06	0x03

RF Operate Unlock	0x19	0x01	by RF module	0x06	0X04
Auto Lock Operate Locked	0x1B	0x01	Auto re-lock cycle complete, locked.	0x06	0x09
User deleted	0x21	0x (01-max users)	User code was deleted. Alarm level = user slot number	0x06	0X0D (single)
		0x00 [1]	All User codes were deleted		0X0C (all)
Non-Access /Messaging User	0x26	0x (01-max users)	A Non-Access/Messaging Credential was entered at the lock (Where Event Parameter represents the User Code Slot or User Slot, Credential Slot, and Credential Type)	0x06	0x33
Non-Access/Messaging Pin Code		0x (01-FF) user code slot			0x20
Lever Rotated (Rx)	0x29	0x00	Interior Lever was rotated. Only active when Escape Return Mode is enabled or during Shutdown Mode	0x06	0xFE
Door State / DoorSense™ [2]	0x2B	0x00	Door is open	0x06	0x16
		0x01	Door is closed	0x06	0x17
		0x02	Door Propped (Door Open for longer than configurable door propped time)	0x06	0xFE
Lock message for FOTA	0x51	0x00	Lock FOTA completed	0x09	0xFE

Daily Repeating Schedule Set/Erased	0x60	0x (01-max users)	Schedule(s) has been set/erased for specified user ID	0x06	0xFE
Year Day Schedule Set/Erased	0x62	0x (01-max users)	Schedule(s) has been set/erased for specified user ID	0x06	0xFE
All Schedule Types Enabled/Disabled	0x65	0x (01-max users)	Schedule(s) has been enable/disabled for specified user ID. If Alarm Level = 0xFF then all users were affected.	0x06	0xFE
Programming Code Updated/Modified	0x70	0x00	Programming code was changed at keypad or via RF	0x06	0x12
User Code Added		0x (01-max users)	User added. Alarm level = user slot number	0x06	0X0E
Duplicate User Code error	0x71	0x (01-max users)	Where alarm level represents user slot numbers 1-255 and Alarm level represents a truncated user slot numbers 256-500 therefore use Event Parameter to determine slot number An Alarm is generated in response to add user via RF. This alarm is not generated when attempting to add duplicate pin at the Keypad (The lock simply denies it and plays the "Denied" sound.) Trying to duplicate the master code will result in a 0x71 0x00 alarm report.	0x06	0x0F

Battery is fully charged	0x80	0x05	After a low battery alert was observed, the lock was powered down and powered back up with full battery.	0x08	0x0D
Door Lock needs Time set / RF Module Power Cycled	0x82	0x00	Power to the lock was restored and the lock's RTC was cleared. The controller should set the time to ensure proper logging.	0x08	0x01
Disabled user entered at keypad	0x83	0x (01-max users)	A disabled user pin code was entered at the keypad (Valid credential access denied due to User Active State being set to Occupied Disabled). Alarm level represents a truncated user slot numbers 256-500 therefore use Event Parameter to determine slot number.	0x06	0x2F
Valid user but outside of schedule	0x84	0x (01-max users)	A valid user can be both a normal user and a non-Access user. If a non-access user is out of schedule this alarm will be sent instead of the non-access alarm.	0x06	0x30
Invalid Credential Entered	0xA0	Number of Credentials in Attempt (0x01~0x03)	Invalid credential used to access the node	0x06	0x32
Tamper Alarm	0xA1	0x01	keypad attempts exceed code entry limit	0x06	0X10
		0x02	front escutcheon removed from main	0x09	0x06
Low Battery Alarms [3]	0xA7	0x (Current %)	*Low Battery* Starting at 7.2V	0x08	0x0A
	0xA8	0x (Current %)	*Critical Battery Level* Starting at 6.8V	0x08	0x0B
Integrated BLE Lock [4]	0xE2	0x00	Integrated BLE Lock	0x06	0X03
		0x01	Integrated BLE Auto Relock	0x06	0x09

Integrated BLE Unlock [4]	0xE3	0x00	Integrated BLE Unlock	0x06	0X04
		0x01	Integrated BLE Auto Unlock	0x06	0X04

[0] These notifications are not supported with this Lock but supported in a shared module firmware.
[1] Deleting all user codes will also delete any associated schedules (year day and daily repeating scheduled pin codes) assigned to user codes.
[2] This requires additional Hardware.
[3] The Yale lock also supports a 3rd low battery alarm: too low to operate. This alarm is sent out as a Battery Report (with value = 0xFF) through the Battery Command Class. This is the last low battery alarm level before the product stops functioning. Starting at 6.0V
[4] Needs Yale Access App setup.

Command Class Configuration, Version 4*

* This command class requires security.

Table 8 - Configurable Parameters

Param. Num.	Name	Length	Configuration Properties			Info	Length of Info String
			Min	Max	Default		(Max length allowed is 90)
1	Volume	1 byte	0x01 (High Volume)	0x03 (Silent)	0x01 (High Volume)	Set Volume Level to high (1), low (2), or silent (3).	53
2	Auto Relock	1 byte	0x00 (Disable)	0xFF (Enable)	0xFF (Enable)	Set Auto Relock feature to enable or disable.	45
3	Relock time [1]	1 byte	0x01 (1 seconds) [1]	0xB4 (180 seconds)	0x03 (3 seconds)	Adjust the time your lock will auto relock.	43
4	Wrong Code Entry Limit	1 byte	0x03	0x0A	0x03	Adjust the limit for wrong code entries allowed by your lock.	61
7	Shut down time	1 byte	0x0A (10 seconds)	0x84 (132 seconds)	0x3C (60 seconds)	Adjust the time your lock is shutdown after reaching its wrong code entry limit.	80

8	Operating mode[2]	1 byte	0x00 (Normal Mode)	0x03 (Passage Mode)	0x00 (Normal Mode)	Set the Operating Mode to normal mode, keypad disable mode, privacy mode or passage mode.	89
11	One Touch Locking	1 byte	0x00 (Disable)	0xFF (Enable)	0xFF (Enable)	Set One Touch Locking feature to enable or disable.	51
12	Privacy Button	1 byte	0x00 (Disable)	0xFF (Enable)	0x00 (Disable)	Set Privacy Button feature to enable or disable.	48
13	Lock Status LED	1 byte	0x00 (Disable)	0xFF (Enable)	0x00 (Disable)	Set Lock Status LED feature to enable or disable.	49
16	Escape Return Mode	1 byte	0x00 (Disable)	0xFF (Enable)	0x00 (Disable)	Enable or Disable Escape Return Mode	36
18	Door Propped Timer [4], [5]	1 byte	0x00 (Disable) [4]	0xFE (2540 seconds) [4]	0x00 (Disable) [4]	Adjust the time to receive an alert when the door is propped open.	66
19	DPS Alarms (DoorSense™) [5]	1 byte	0x00 (Disable)	0xFF (Enable)	0xFF (Enable)	Enable or Disable DPS Alarms	28
28	Expiring Pin Code Enabled Time	1 byte	0x00 (Disable)	0xFF (127 Hours)	0x00 (Disable)	Timeout value used to determine time after first entry is triggered.	68

35	Invalid Credential Entry Alarms	1 byte	0x00 (Disable)	0xFF (Enable)	0x00 (Disable)	Set Invalid Various Credential Entry Alarms On/Off Using Mask	61

[1] Even though we accept value 0x01 for Auto Relock Time, we limit the lock's minimum to value of 0x03. Therefore, if user tries to set Auto Relock Time to values 0x01 or 0x02, it will always report back value of 0x03. After every power cycle where the lock was left unlock, the lock does a one-time auto-handing/auto relocking even if auto-relock feature is disabled.
[2] When Operation Mode feature is set to Passage Mode, this also results in disabling the following configuration parameters 2 (Auto Relock feature). The Passage Mode feature can only be set when Passage User Pin Code is used to unlock the lock.
[3] When this Escape Return Mode feature is enabled, this also results in disabling the following configuration parameters 2 (Auto Relock feature) and 11 (One Touch Locking feature).
[4] The Door Propped value is represented as seconds X 10. (ie a value of 4 would mean a door-propped timer of 40 seconds).
[5] Additional hardware required. These parameters are only active if the optional Door Position Switch has been installed with the lock and calibrated via Lock Settings or Yale Access App.

Command Class Application Status, Version 1

This command class has been implemented by the Z-Wave® Specification.

Command Class Transport Service, Version 2

This command class has been implemented by the Z-Wave® Specification.

Command Class Supervision, Version 1

This command class has been implemented by the Z-Wave® Specification.

Command Class Indicator, Version 3*

* This command class requires security.

The indicator feature is set by using Indicator ID 0x50 to identify the node and Property ID 0x02 or 0x03, 0x04 and 0x05.

Table 9 – Lock UI for Indicator Set Overview

Indicator Set	**Lock Exterior**
OFF	Keypad LED is OFF
ON	YMB624/644: Numbers 0-9 on Touch Screen Flash YMB614/634: All buttons Flash

To set the Indicator ID 0x50 with Property 0x02, set values to 0x00 for off and 0x01…0x63 or 0xFF for on.

To properly set the Indicator ID 0x50 with Properties 0x03, 0x04 and 0x05, we had to map the values to our lock's specific blink rate.

Table 10 – Minimum Values for Indicator Set Property IDs 0x03, 0x04, & 0x05 to trigger Lock UI

Property ID 0x03 (On/Off Periods) Fixed Value	**Property ID 0x04 (On/Off Cycles) Minimum Value**	**Property ID 0x05 (On time within an on/Off period) Fixed Value**
0x13*	0x00...0xFF (per Z-Wave® Spec)	0x0A*

**NOTE: If Property IDs 0x03 and 0x05 are set to value other than the above, then the lock will blink at a different number of cycles than what you have set. **

Command Class Basic, Version 2*

* This command class requires security.

This command class is mapped to Door Lock CC:

Table 11 – Basic Mapping Overview

Basic Command	Door Lock Mapped Command
Basic Set (Value)	Door Lock Operation Set (Door Lock Mode)
Basic Report (Current Value = 0x00)	Door Lock Operation Report (Door Lock Mode = 0x00)
Basic Report (Current Value = 0xFF)	Door Lock Operation Report (Door Lock Mode = 0xFF)

The Basic Get Current Value, Basic Get Duration, and Basic Get Target Value are mapped to Door Lock Operation Get and Basic Set is directly mapped to Door Lock Operation Set where the Duration is returned as is, but the Value and Target Door Lock State Value of the Basic Report use the following mapping:

Table 12 – Basic Report: Value

Value	Level	State	Door Lock State
0 (0x00)	0%	Off	Unsecure
1..253 (0x01...0xFD)	Reserved	Reserved	
254 (0xFE)	Unknown	Unknown	Unknown
255 (0xFF)	100%	On	Secure